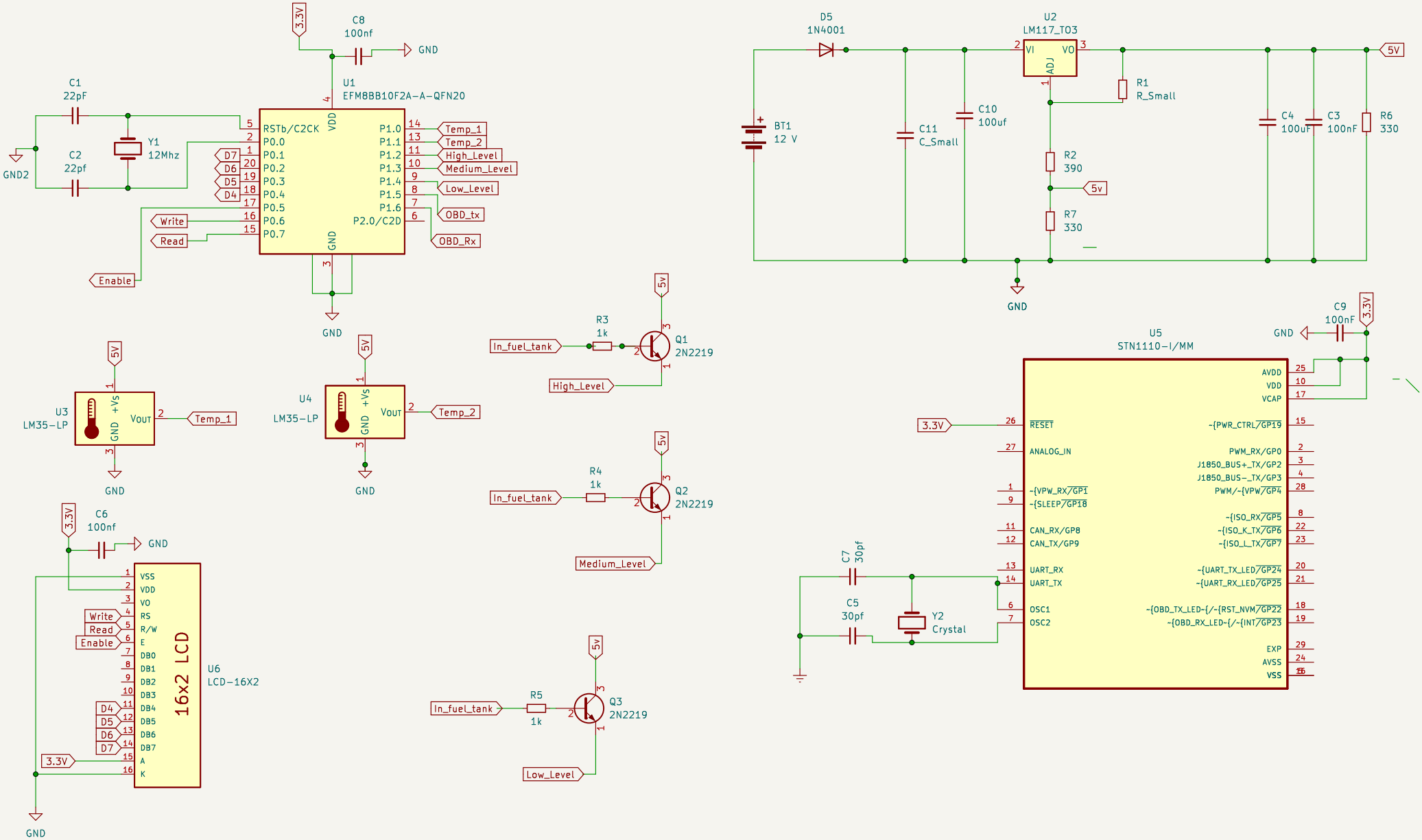
3.3V
C8
100nf
GND
U1
EFM8BB10F2A-A-QFN20
C1
22pF
C2
22pf
GND2
Y1
12Mhz
RSTb/C2CK
P0.0
P0.1
P0.2
P0.3
P0.4
P0.5
P0.6
P0.7
VDD
GND
P1.0
P1.1
P1.2
P1.3
P1.4
P1.5
P1.6
P2.0/C2D
D7
D6
D5
D4
Write
Read
Enable
Temp_1
Temp_2
High_Level
Medium_Level
Low_Level
OBD_tx
OBD_Rx
D5
1N4001
U2
LM117_TO3
VI
VO
ADJ
R1
R_Small
BT1
12 V
C11
C_Small
C10
100uf
R2
390
R7
330
5v
C4
100uF
C3
100nF
R6
330
5V
U3
LM35-LP
+Vs
VOUT
U4
LM35-LP
R3
1k
R4
1k
R5
1k
In_fuel_tank
Q1
2N2219
Q2
2N2219
Q3
2N2219
C6
100nf
U6
LCD-16X2
16x2 LCD
VSS
VDD
VO
RS
R/W
E
DB0
DB1
DB2
DB3
DB4
DB5
DB6
DB7
A
K
C9
100nF
U5
STN1110-I/MM
RESET
ANALOG_IN
~{VPW_RX/GP1
~{SLEEP/GP18
CAN_RX/GP8
CAN_TX/GP9
UART_RX
UART_TX
OSC1
OSC2
AVDD
VDD
VCAP
~{PWR_CTRL/GP19
PWM_RX/GP0
J1850_BUS+_TX/GP2
J1850_BUS-_TX/GP3
PWM/~{VPW/GP4
~{ISO_RX/GP5
~{ISO_K_TX/GP6
~{ISO_L_TX/GP7
~{UART_TX_LED/GP24
~{UART_RX_LED/GP25
~{OBD_TX_LED-{/~{RST_NVM/GP22
~{OBD_RX_LED-{/~{INT/GP23
EXP
AVSS
VSS
C7
30pf
C5
30pf
Y2
Crystal