Experiment 5

Name:Gokul Nair

UID:2024200074

B1

AIM: To Study Opamp as Integrator , differentiator , log amplifier , antilog amplifier , voltage to current converter and current to voltage converter.

Apparatus:

Resistor - 1K,3.9K,10k Ω, Oscilloscope Keysight technologies, Multimeters HTC instruments, Function Generator Scientific Tech Services, Power Supply Ap lab, Capacitor - 10nF,10uF, Bread Board and connecting wires, diode(1N4007) -Si, IC 741 SGS Thomson Vsat=14V for Vcc=15V

Software:Proteous(v-8.9) - Labcenter electronics

Objective 1:Opamp as Integrator

Hardware

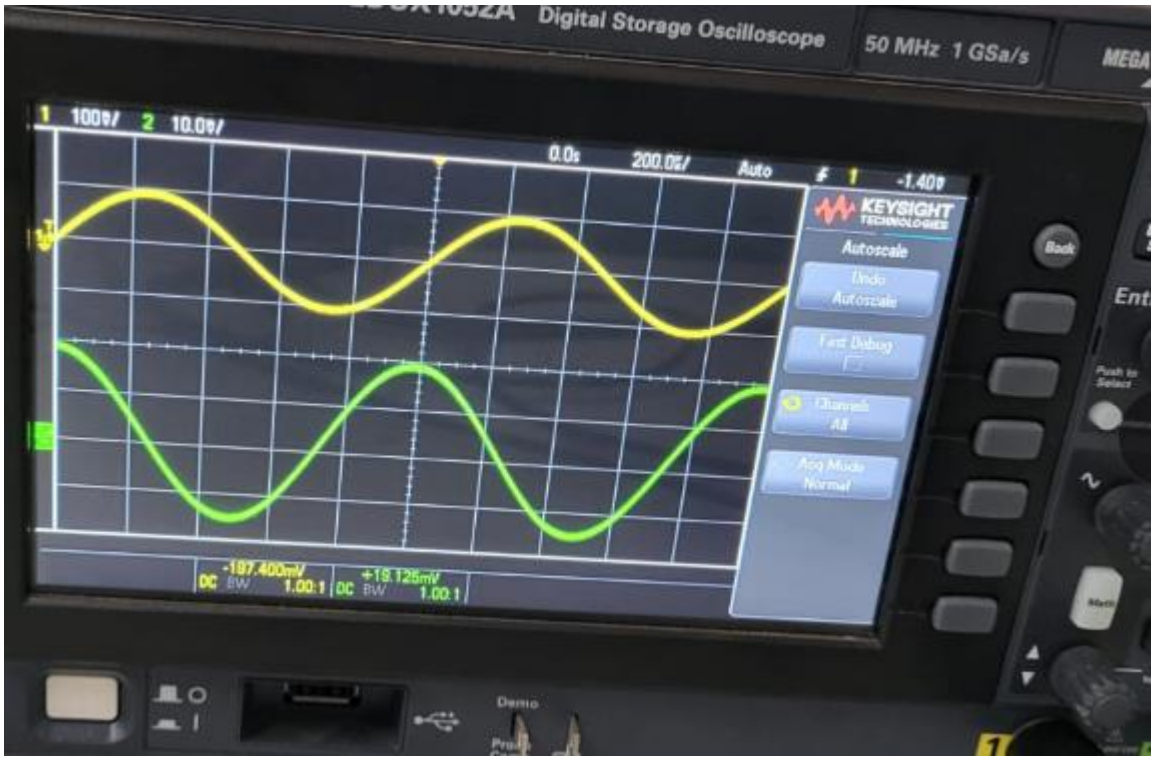

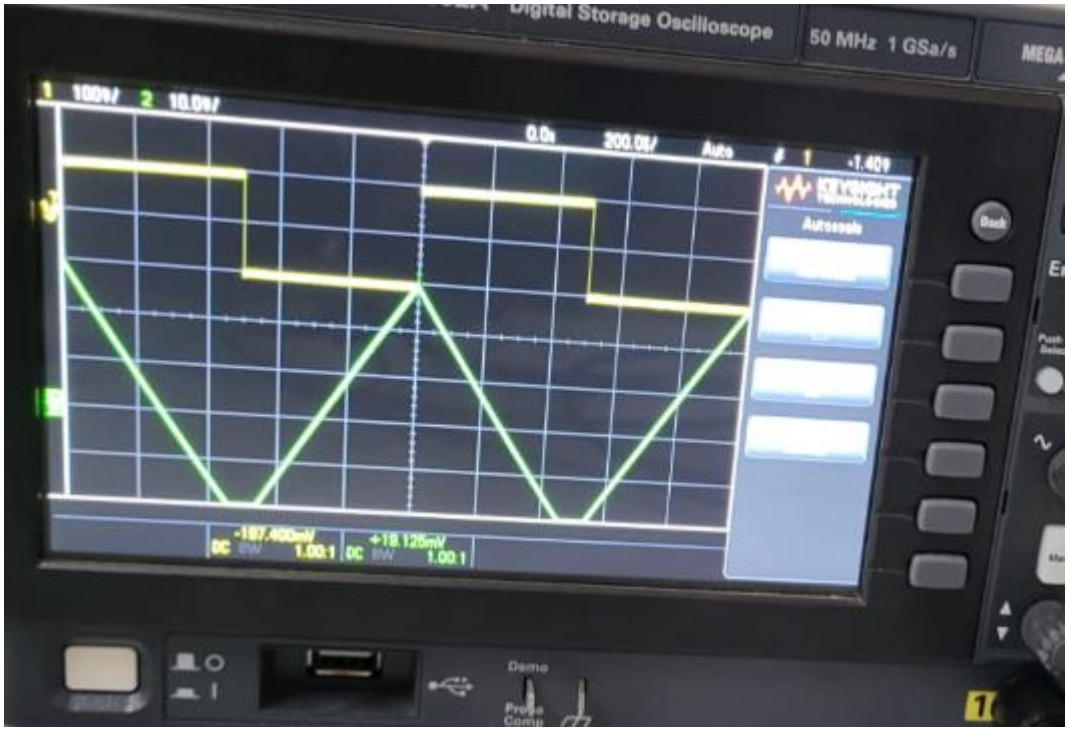

Software

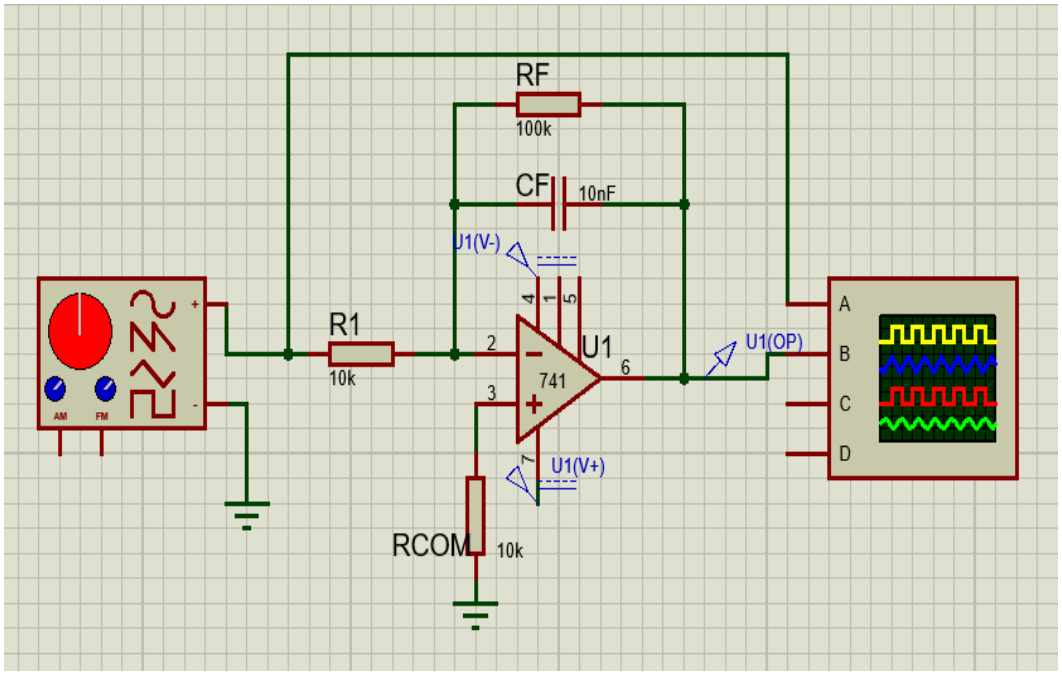

For Sine Input

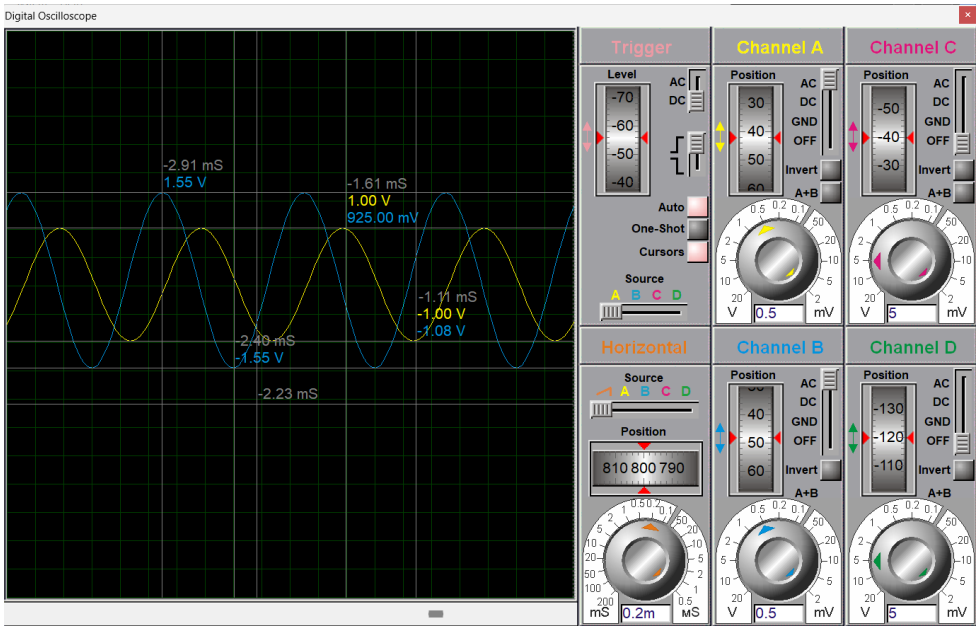

For Square Input

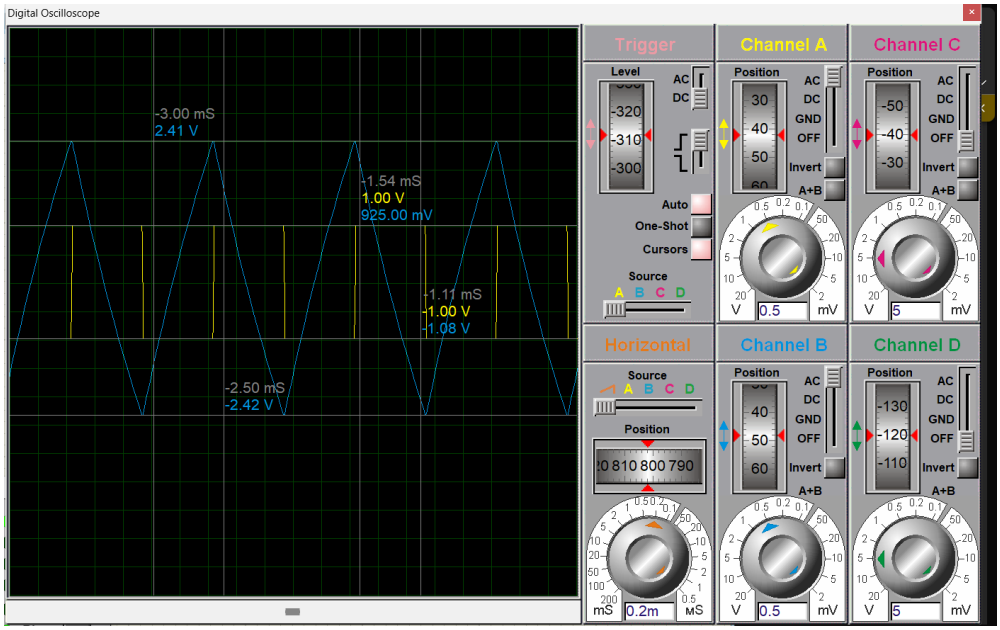

OpAmp as Integrator

1) Sine wave

$R_1 = 10k\Omega$ $C_F = 10nF$ $f = 1kHz$ $V_{in} = 2V_{pp}$

$$A_v = \frac{1}{2\pi f RC}$$

$$= \frac{1}{2\pi \times 1\times10^3 \times 10\times10^3 \times 10\times10^{-9}}$$

$$A_v = 1.591$$

$$\frac{V_o}{V_{in}} = 1.591$$

$$V_o = 1.591(1)$$

$$\boxed{V_o = 1.591\ V}$$

2) Square wave

$$V_o = \frac{V_{in}}{4fRC}$$

$$= \frac{1}{4\times10^3 \times 10\times10^3 \times 10\times10^{-9}}$$

$$V_o = 2.5\ V$$

$$\therefore V_{o\,peak} = 2.5V$$

$$(V_o)_{pp} = 5V$$

Objective 2:Opamp as Differentiator

Software

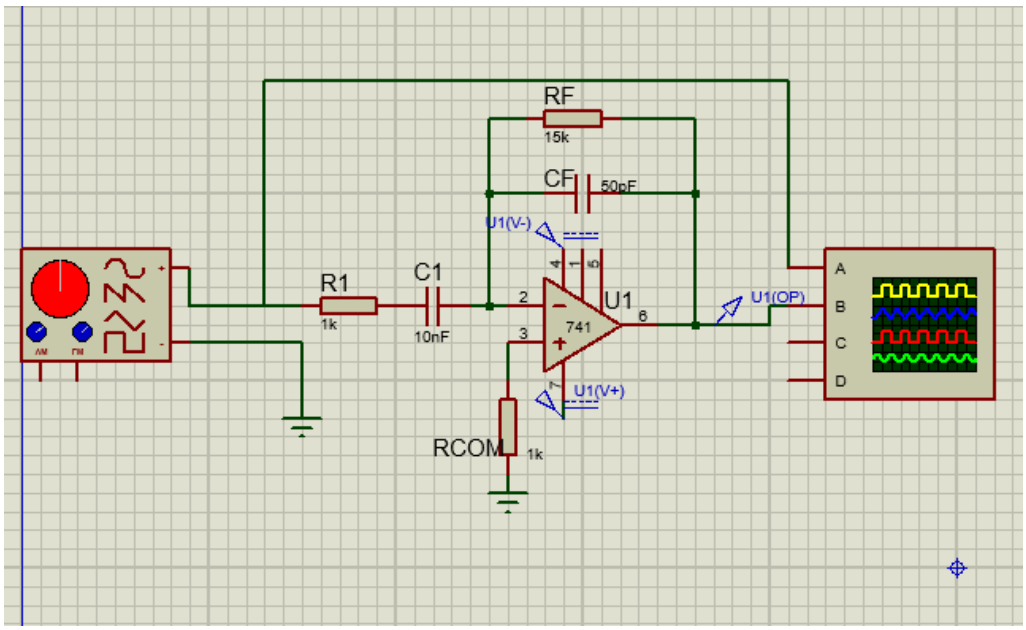

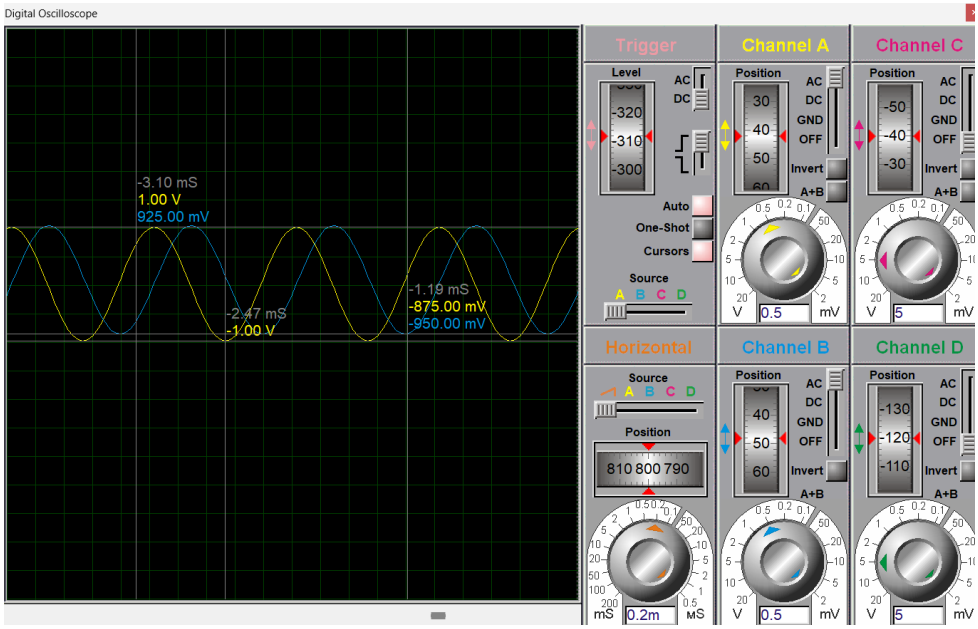
Digital Oscilloscope
-3.10 mS
1.00 V
925.00 mV
-2.47 mS
-1.00 V
-1.19 mS
-875.00 mV
-950.00 mV
Trigger
Level
-320
-310
-300
AC
DC
Auto
One-Shot
Cursors
Source
A B C D
Channel A
Position
30
40
50
60
AC
DC
GND
OFF
Invert
A+B
V
0.5
mV
Channel C
Position
-50
-40
-30
AC
DC
GND
OFF
Invert
A+B
V
5
mV
Horizontal
Source
A B C D
Position
810 800 790
mS
0.2m
mS
Channel B
Position
40
50
60
AC
DC
GND
OFF
Invert
A+B
V
0.5
mV
Channel D
Position
-130
-120
-110
AC
DC
GND
OFF
Invert
A+B
V
5
mV

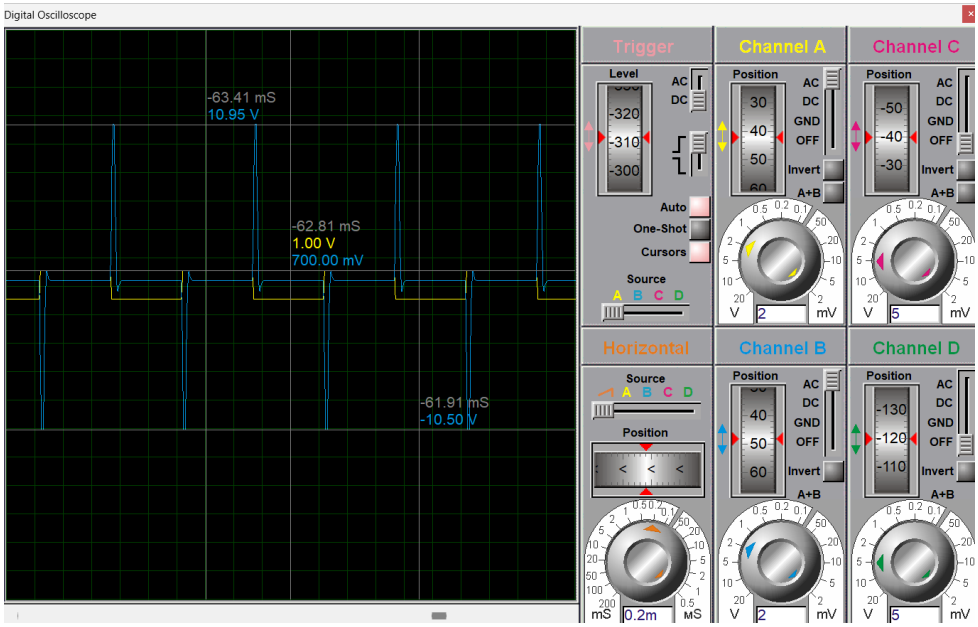
Digital Oscilloscope
-63.41 mS
10.95 V
-62.81 mS
1.00 V
700.00 mV
-61.91 mS
-10.50 V
Trigger
Level
-320
-310
-300
AC
DC
Auto
One-Shot
Cursors
Source
A B C D
Channel A
Position
30
40
50
60
AC
DC
GND
OFF
Invert
A+B
V
2
mV
Channel C
Position
-50
-40
-30
AC
DC
GND
OFF
Invert
A+B
V
5
mV
Horizontal
Source
A B C D
Position
mS
0.2m
mS
Channel B
Position
40
50
60
AC
DC
GND
OFF
Invert
A+B
V
2
mV
Channel D
Position
-130
-120
-110
AC
DC
GND
OFF
Invert
A+B
V
5
mV

Hardware

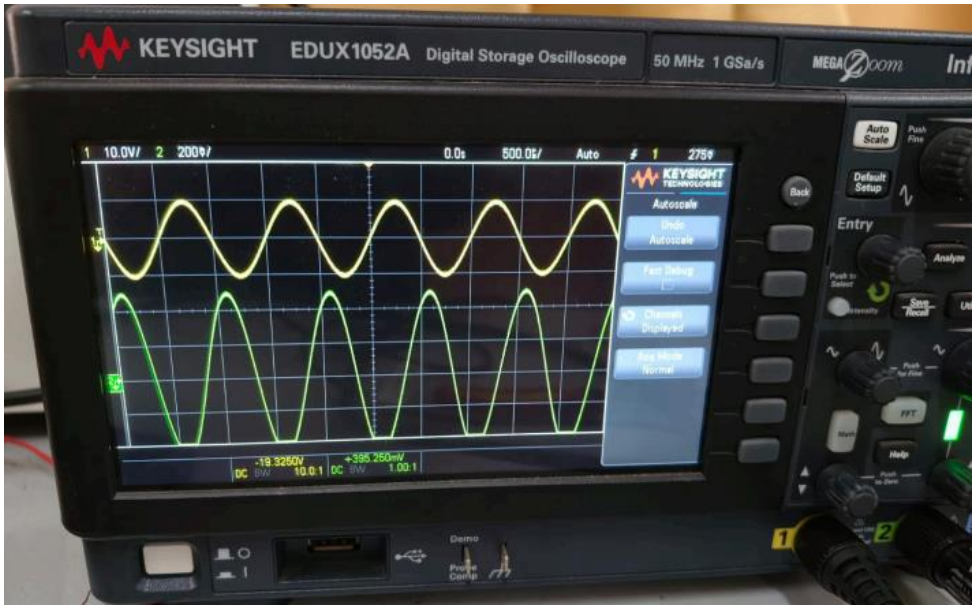
KEYSIGHT
EDUX1052A Digital Storage Oscilloscope
50 MHz 1 GSa/s
Auto Scale
Default Setup
Entry
Back
Autoscale
Undo Autoscale
Fast Debug
Channels Displayed
Acq Mode Normal
Demo

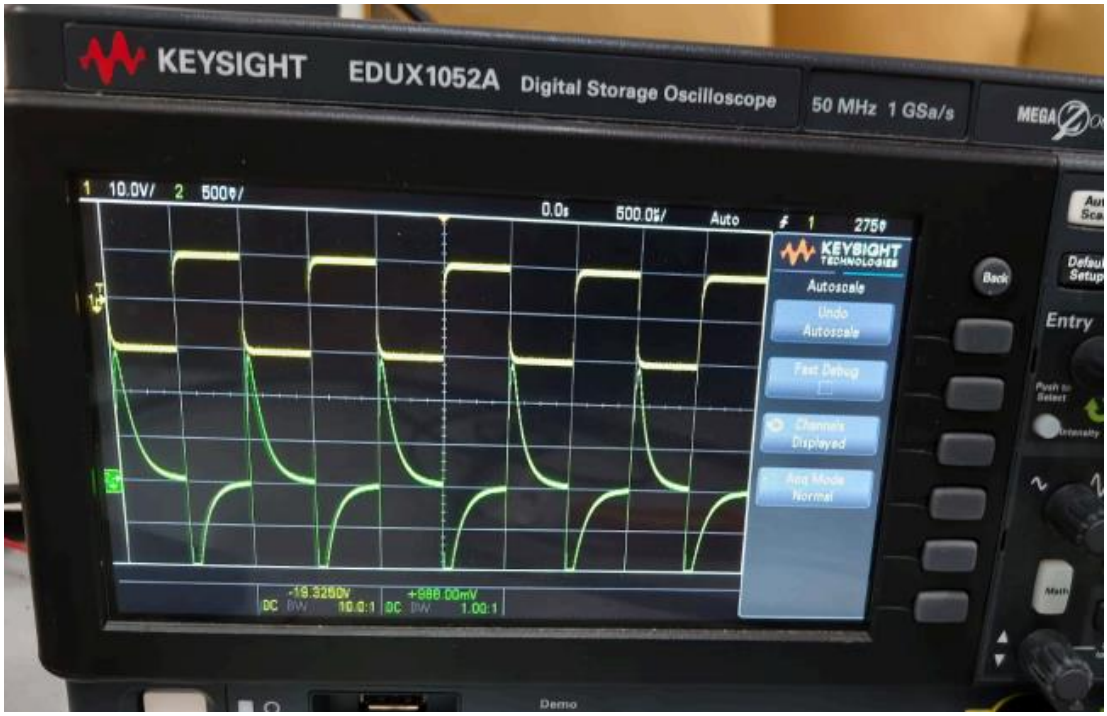
KEYSIGHT
EDUX1052A Digital Storage Oscilloscope
50 MHz 1 GSa/s
Back
Entry
Autoscale
Undo Autoscale
Fast Debug
Channels Displayed
Acq Mode Normal
Demo

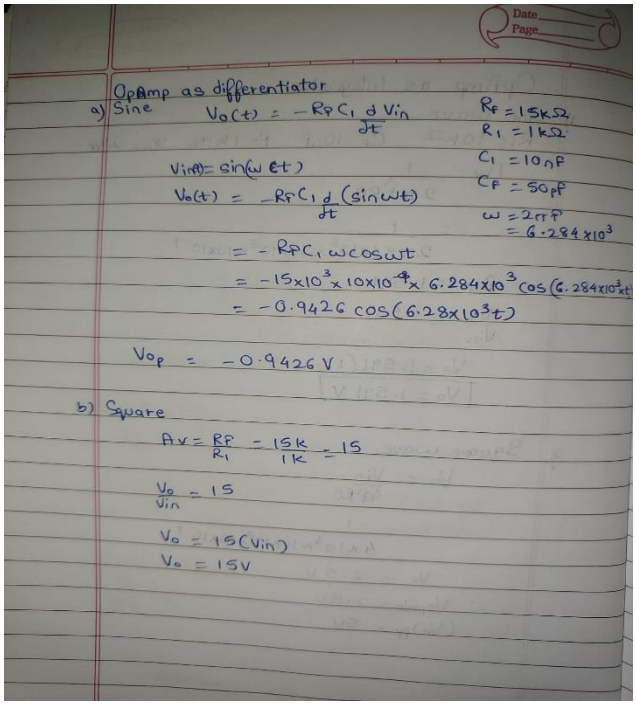

Opamp as differentiator

a) Sine

$V_o(t) = -R_F C_1 \frac{d V_{in}}{dt}$

$R_F = 15k\Omega$

$R_1 = 1k\Omega$

$C_1 = 10nF$

$C_F = 50pF$

$\omega = 2\pi f$

$= 6.284 \times 10^3$

$V_{in}(t) = \sin(\omega t)$

$V_o(t) = -R_F C_1 \frac{d}{dt}(\sin \omega t)$

$= -R_F C_1 \omega \cos \omega t$

$= -15\times10^3 \times 10\times10^{-9} \times 6.284\times10^3 \cos(6.284\times10^3 t)$

$= -0.9426 \cos(6.28\times10^3 t)$

$V_{op} = -0.9426\ V$

b) Square

$A_v = \frac{R_F}{R_1} = \frac{15k}{1k} = 15$

$\frac{V_o}{V_{in}} = 15$

$V_o = 15(V_{in})$

$V_o = 15V$

Objective 3:Opamp as Log Amplifier

Vin=2V

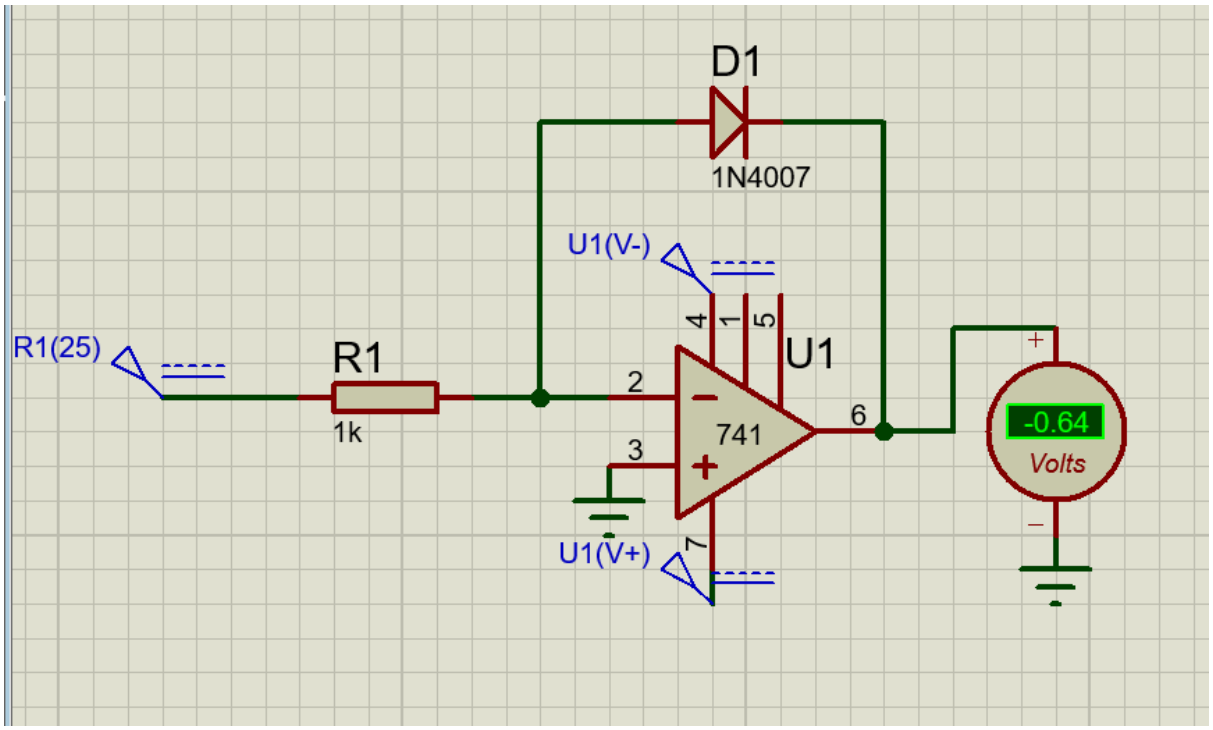

Vin=25V

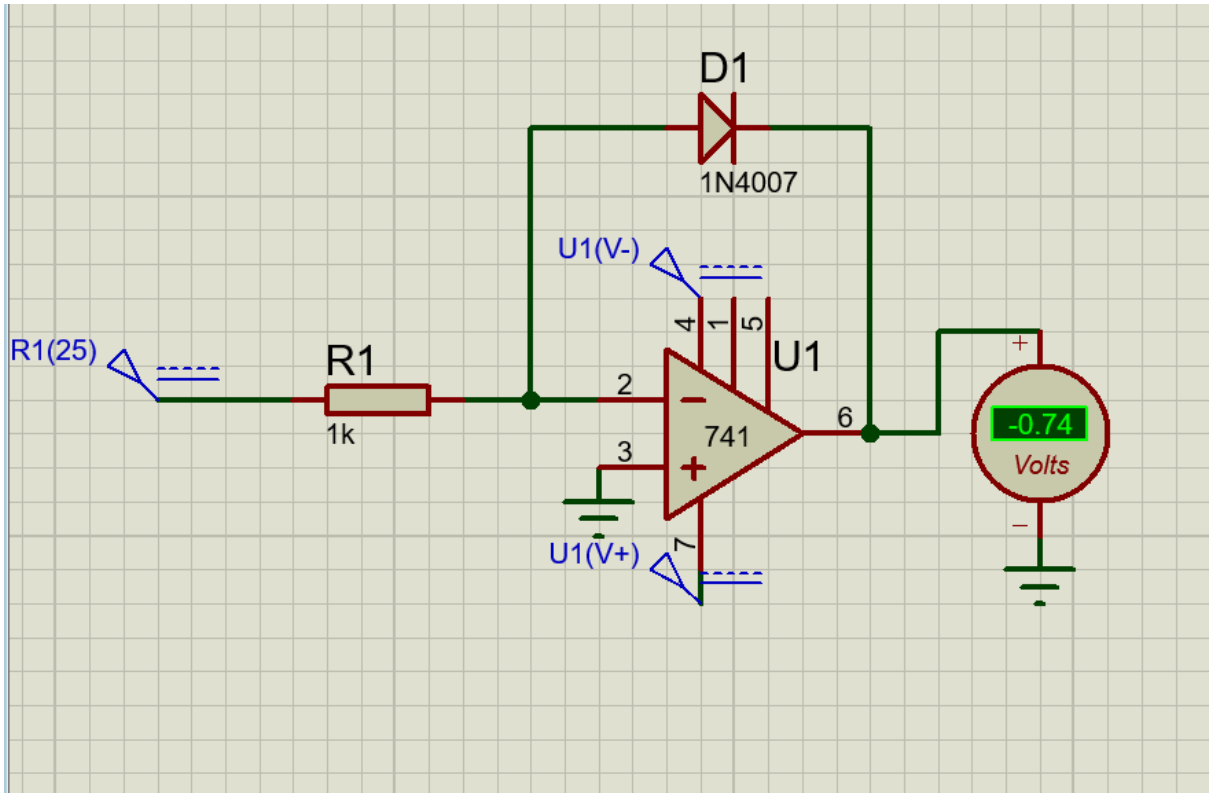

Vin(V)	Vout(Software)(V)	Vout(Hardware)
1	-0.61	-0.591
2	-0.64	-0.623
5	-0.67	-0.666
10	-0.70	-0.695
15	-0.72	-0.704
20	-0.73	-0.716
25	-0.74	-0.716

Op Amp as log amplifier

$V_{in_1} = 1V$ $\quad V_{o_1} = -0.61$ } Software $\quad V_{o_1} = -0.591V$

$V_{in_2} = 10V$ $\quad V_{o_2} = -0.70$ $\quad V_{o_2} = -0.695V$

$\Delta V_{out} = V_{o_2} - V_{o_1}$

$= -0.70 + 0.61$

$\Delta V_{out} = -0.09$

$\Delta V_{out} = -2.303 \eta V_T$

$\eta = \frac{-0.09}{-2.303 \times 0.026}$

$\eta = 1.503$

For hardware

$\eta = 1.736$

Objective 4:Opamp as Antilog Amplifier

Software

Vin=0.5V

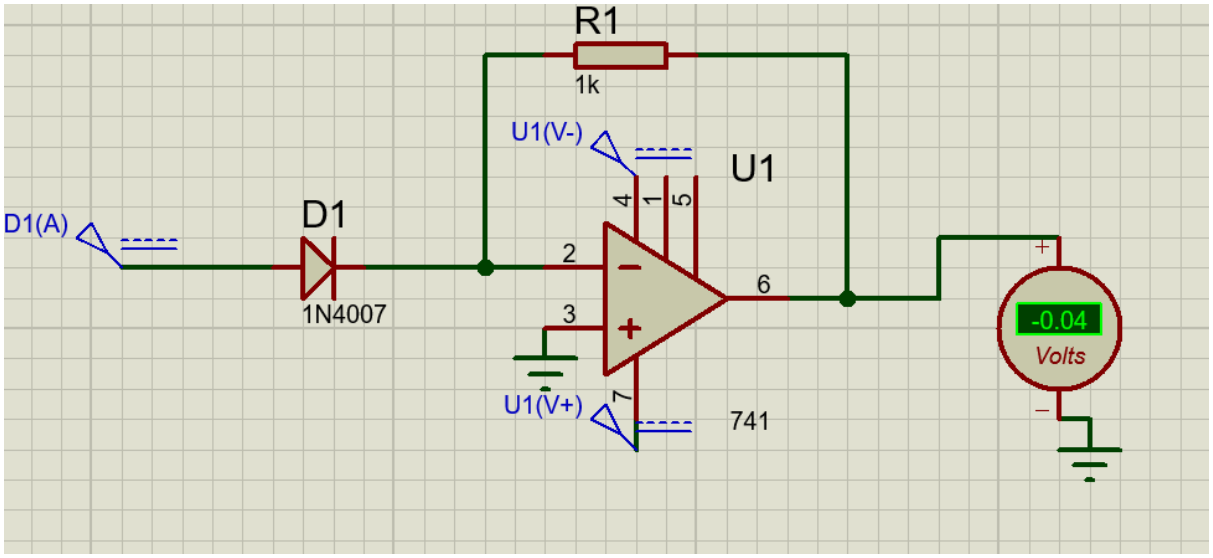

Vin=0.8V

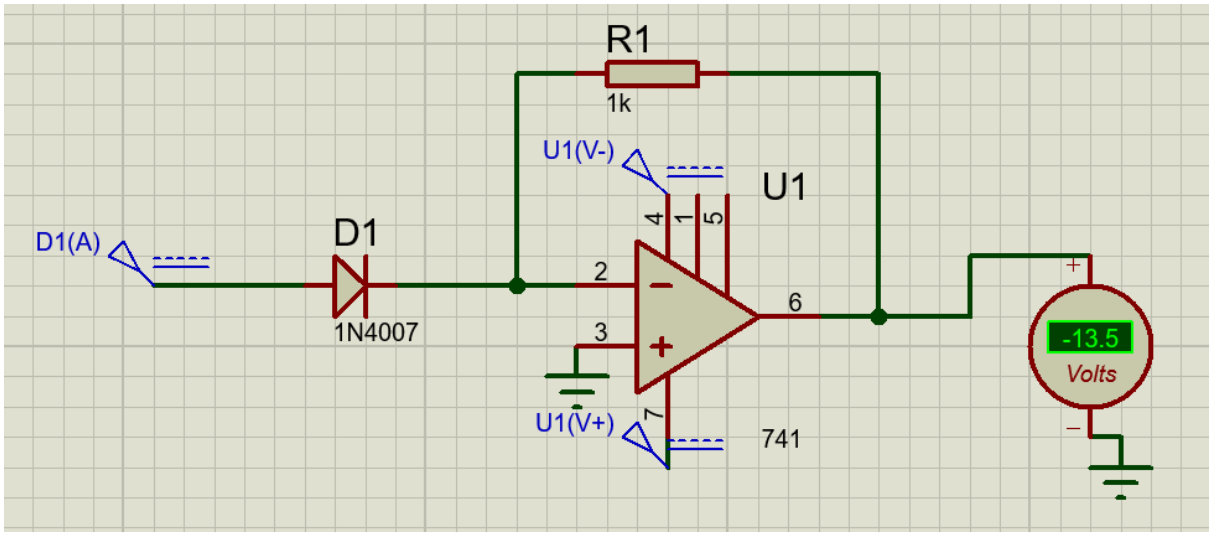

Vin(V)	Vout(software)(V)	Vout(Hardware)
0.20	1.13(mV)	1.03 mV
0.30	0.92(mV)	0.88mV
0.42	-4.32(mV)	-4.10 mV
0.50	-0.04	-0.038 V
0.60	-0.66	-0.63
0.62	-1.13	-1.08
0.68	-5.56	-5.30
0.76	-13.5	-12.6
0.80	-13.5	-13.0
1	-13.5	-13.1
2	-13.5	-13.1

Op Amp as antilog amplifier

$V_{in1} = 0.6V$ $\quad V_{o1} = -0.66$ } Software $\quad V_{o1} = -0.63V$

$V_{in2} = 0.68V$ $\quad V_{o2} = -5.56$ } Software $\quad V_{o2} = -5.30V$

$$\frac{V_{o2}}{V_{o1}} = e^{(V_{in2} - V_{in1})/nV_T}$$

$$\ln\left(\frac{V_{o2}}{V_{o1}}\right) = \frac{V_{in2} - V_{in1}}{nV_T}$$

$$\ln\left(\frac{-5.56}{-0.66}\right) = \frac{0.08}{n \times 0.026}$$

$$2.1311 = \frac{0.08}{n \times 0.026}$$

$$n = \frac{0.08}{2.131 \times 0.026}$$

For Software $n = 1.443$

For hardware $n = 1.444$

Objective 5:Voltage to Current Convertor

Vin=1V Io=1mA

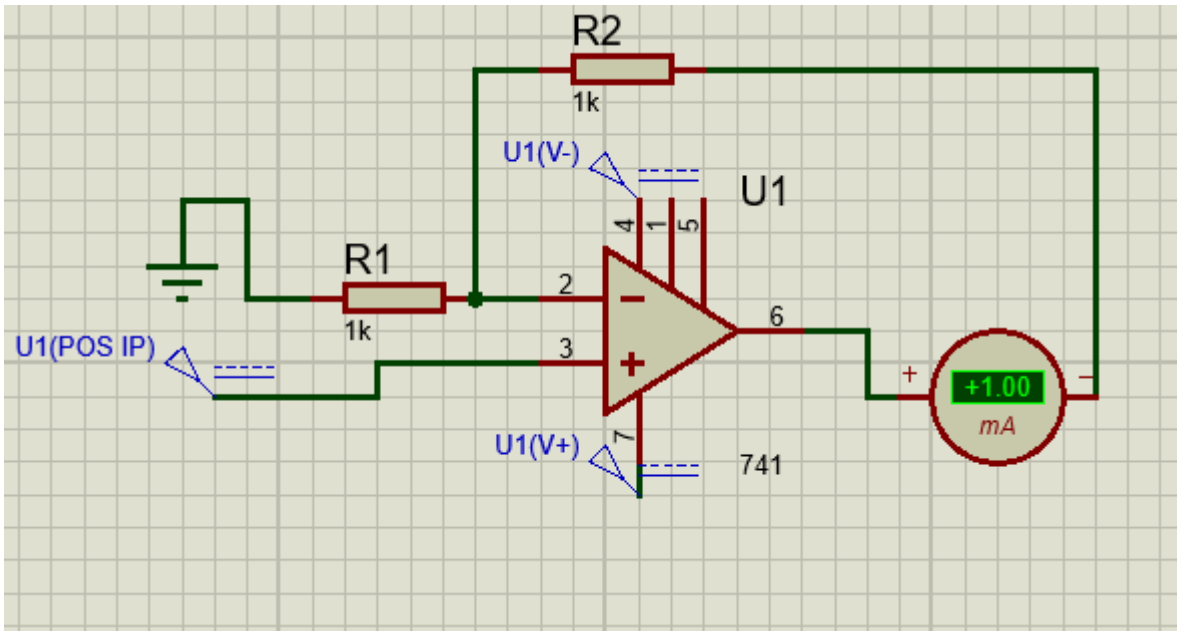

Vin=5V Io=5mA

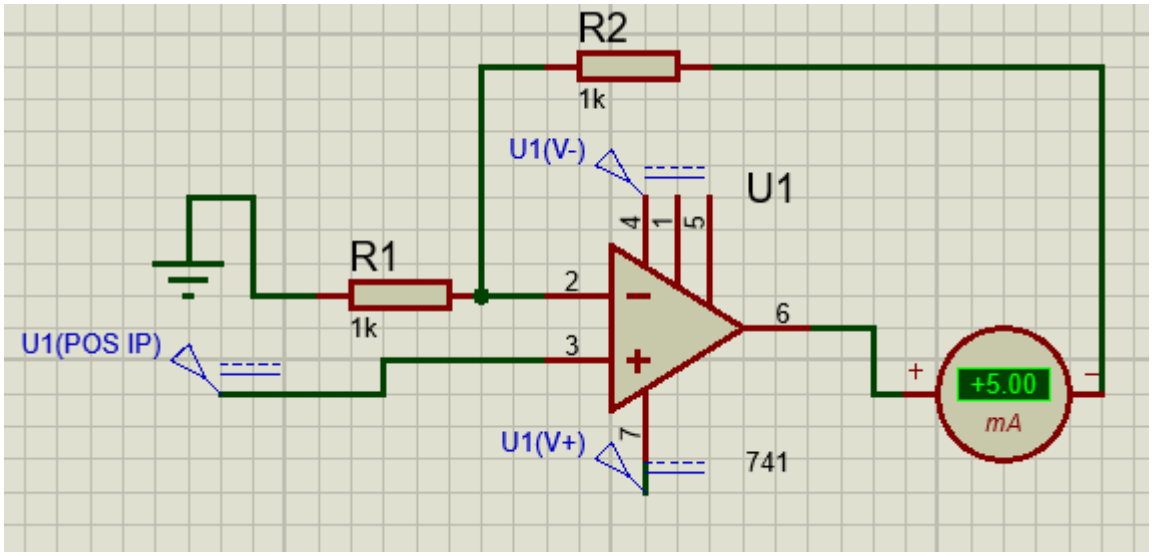

Vin=8V Io=7mA

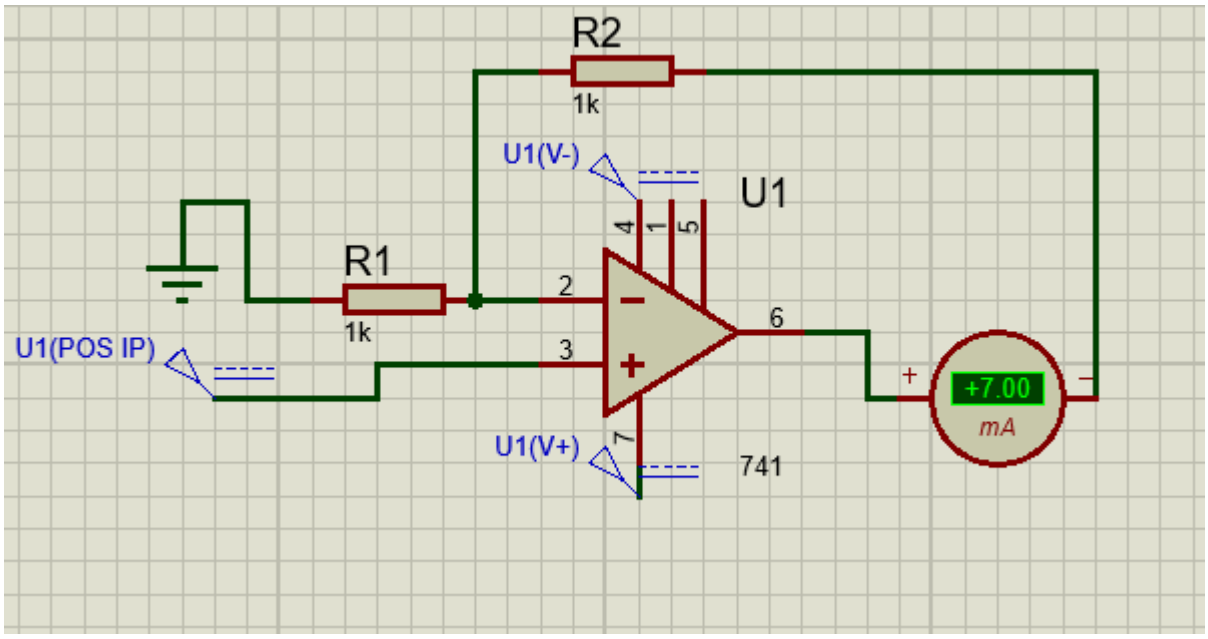

Vin=-8V Io=-6.75mA

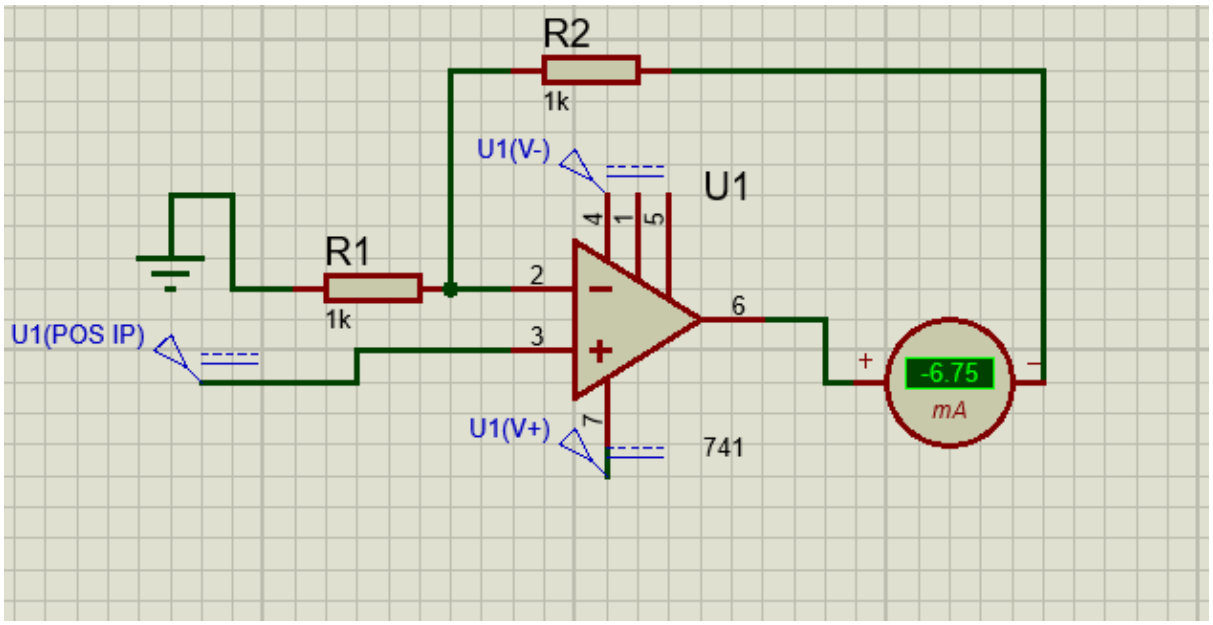

Vin(V)	Io(mA)	Circuit Status	Mode of Operation
12	7	Hard Saturated	Output Clipped near Vcc
8	7	Saturated	Output Clipped near Vcc
7	7	Boundary	Maximum linear current
5	5	Linear	Sourcing Current
1	1	Linear	Sourcing Current

0	0	Null	No Current Flow
-1	-1	Linear	Sinking Current
-5	-5	Linear	Sinking Current
-7	-6.75	Boundary	Maximum linear current
-8	-6.75	Saturated	Output Clipped near -Vcc
-12	-6.75	Hard Saturated	Output Clipped near -Vcc

Objective 6:Current to Voltage Convertor

Vin=16V Iin=14.7mA Vo=-13.5V

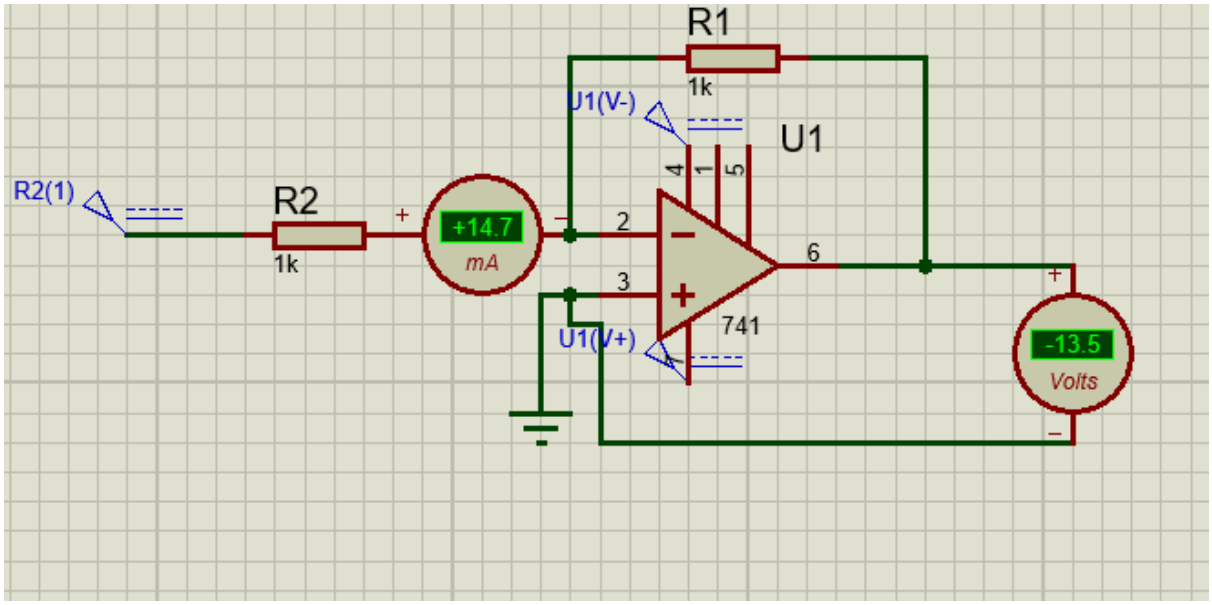

Vin=25V Iin=19.2mA Vo=-13.5

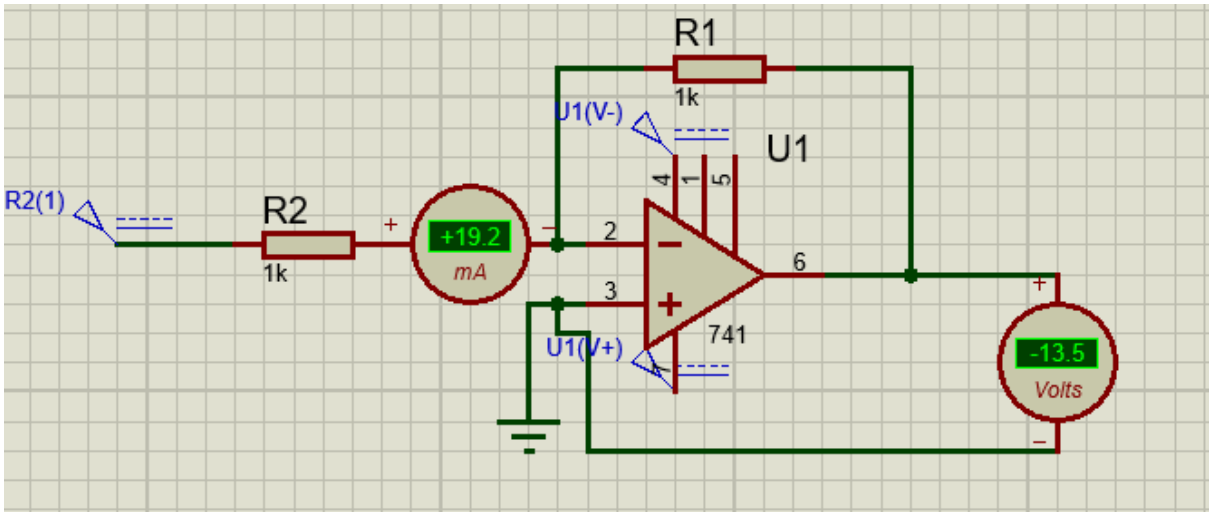

Vin=-16V Iin=-15mA Vo=14V

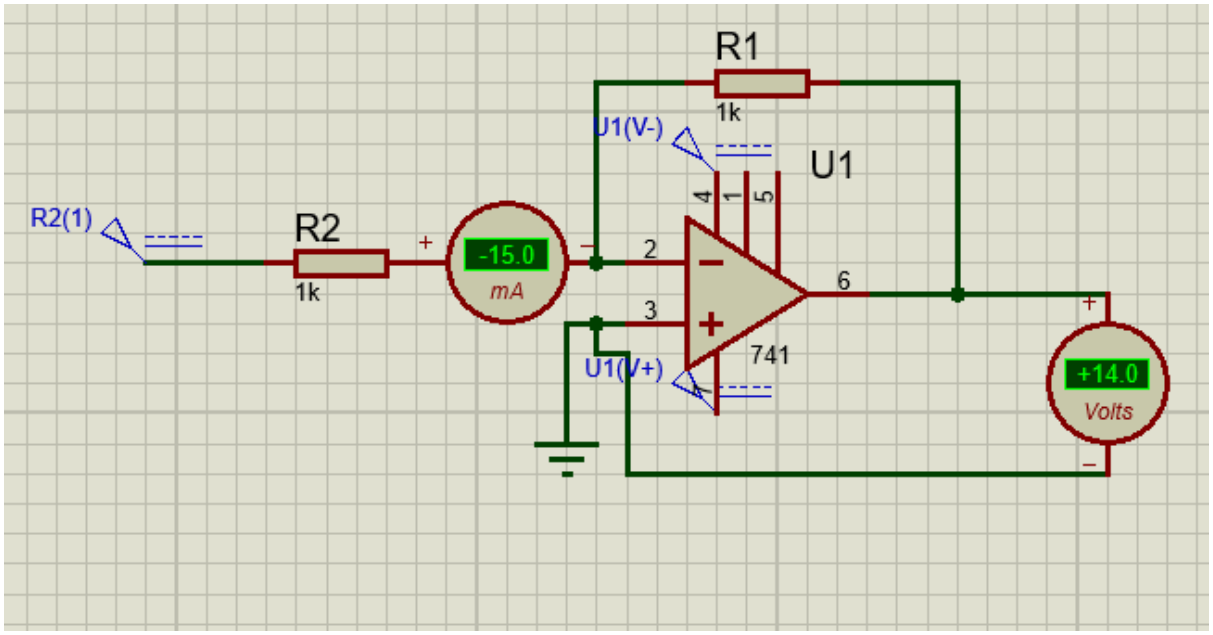

Vin(V)	Iin(mA)	Vo(V)
25	19.2	-13.5
20	16.7	-13.5
16	14.7	-13.5
14	13.7	-13.5
8	8	-8
5	5	-5
0	0	0
-5	-5	5
-8	-8	8
-14	-14	14
-16	-15	14

-20	-17	14
-25	-19.5	14

Conclusion:

This experiment verified the practical behavior of op-amp configurations, where results broadly matched theoretical expectations but showed clear non-ideal effects. The log and antilog amplifiers demonstrated expected compression and exponential behavior, though limited by diode characteristics and early saturation. Integrator and differentiator circuits worked as intended but were sensitive to input waveform and noise. Overall, deviations in hardware readings highlight the impact of real-world factors like component tolerances, temperature, and op-amp limitations.