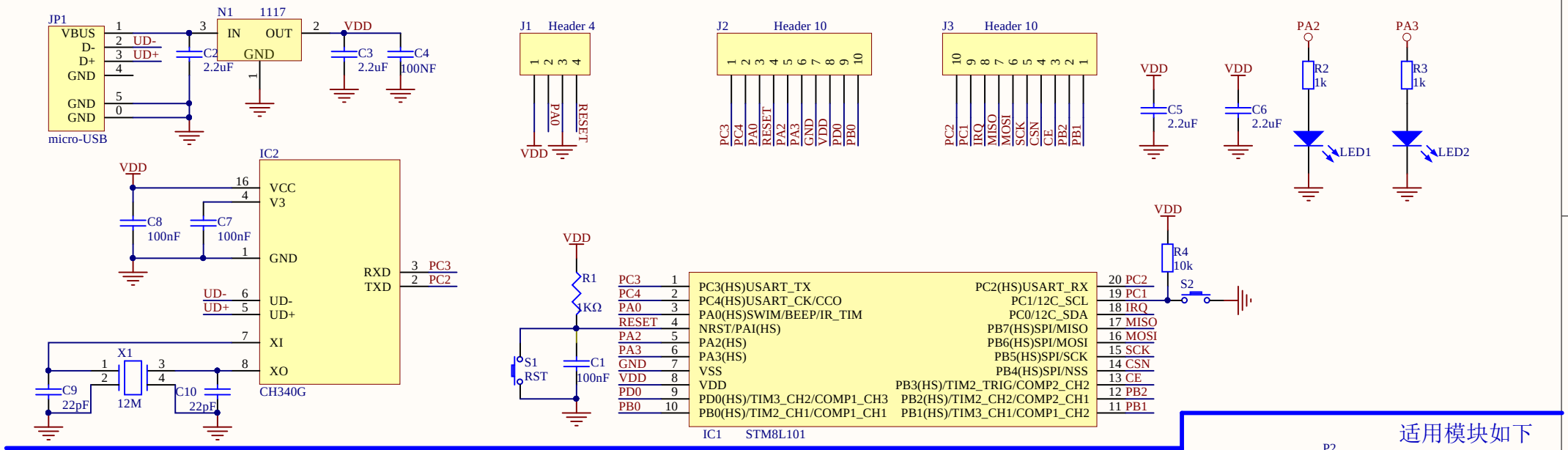

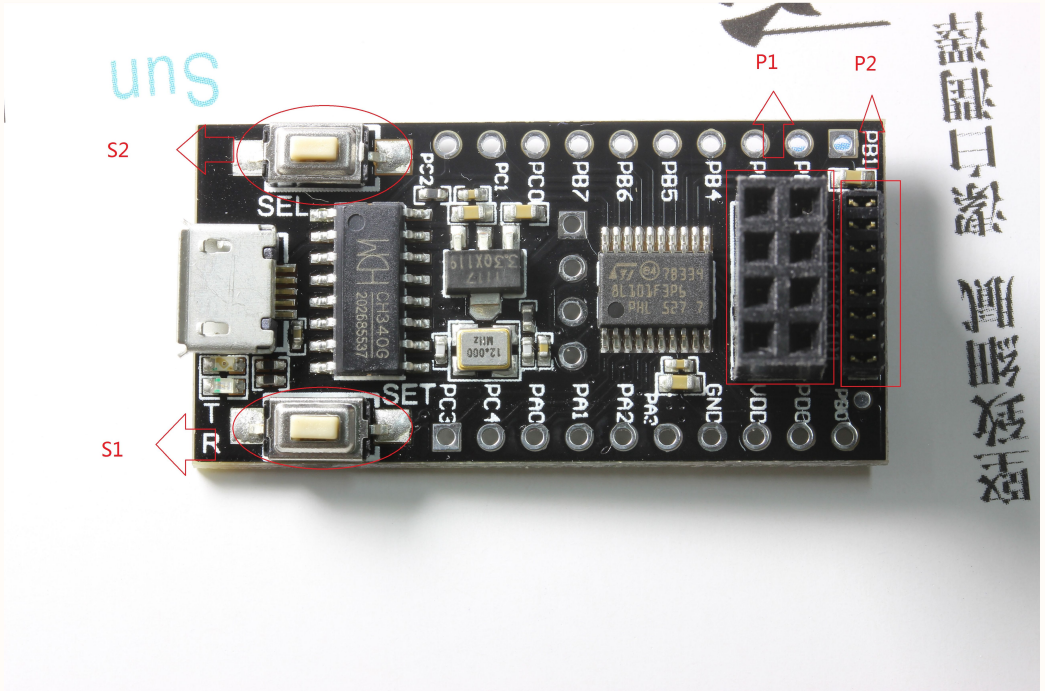

适用模块如下

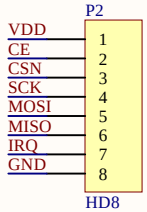

AS01-SMA
AS01-ML01DP5
AS01-ML01D
AS01-ML01DP3
AS01-ML01DP6
AS07-M1101D

适用模块如下

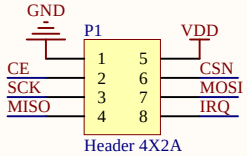

AS01-ML01S
AS01-ML01IPEX
AS01-SP2
AS01-IPX
AS07-M1101S

Title	AS06-01TB-3.0	
Size A4	Number	Revision
Date: 2016-11-03		Sheet of
File: F:\AS06\..\AS06-01TB-V3.0.SchDoc		Drawn By: