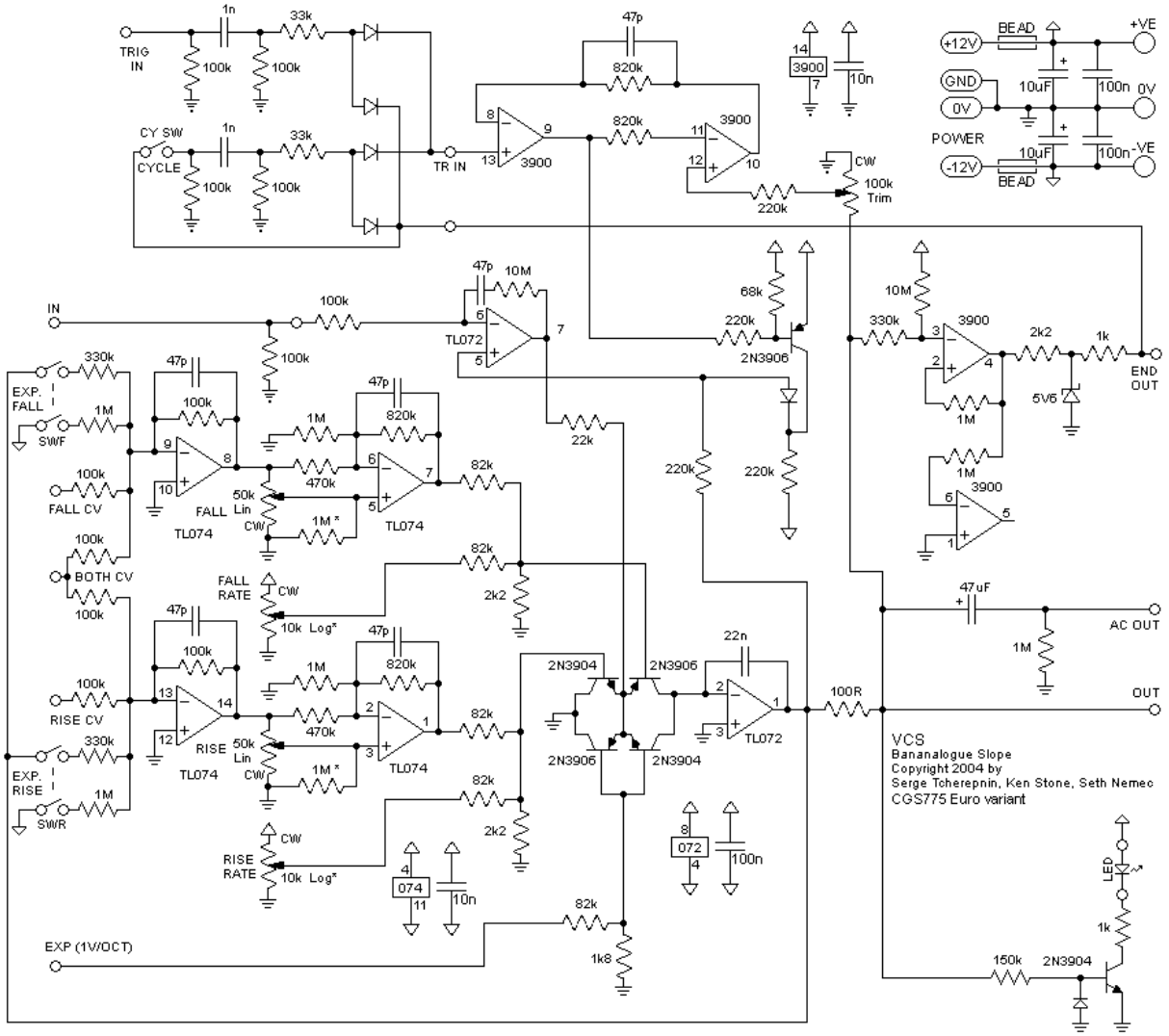
TRIG IN
CY SW
CYCLE
TR IN
CW
100k Trim
220k
3900
820k
47p
10n
+12V
GND
0V
-12V
BEAD
10uF
100n
+VE
0V
-VE
POWER
IN
TL072
10M
68k
220k
2N3906
330k
2k2
1k
END OUT
5V6
EXP. FALL
SW/F
FALL CV
BOTH CV
FALL RATE
10k Log*
FALL
TL074
50k Lin
470k
1M
1M *
82k
22k
47uF
AC OUT
OUT
2N3904
22n
100R
RISE CV
EXP. RISE
SW/R
RISE
RISE RATE
074
EXP (1V/OCT)
1k8
150k
LED
VCS
Bananalogue Slope
Copyright 2004 by
Serge Tcherepnin, Ken Stone, Seth Nemec
CGS775 Euro variant

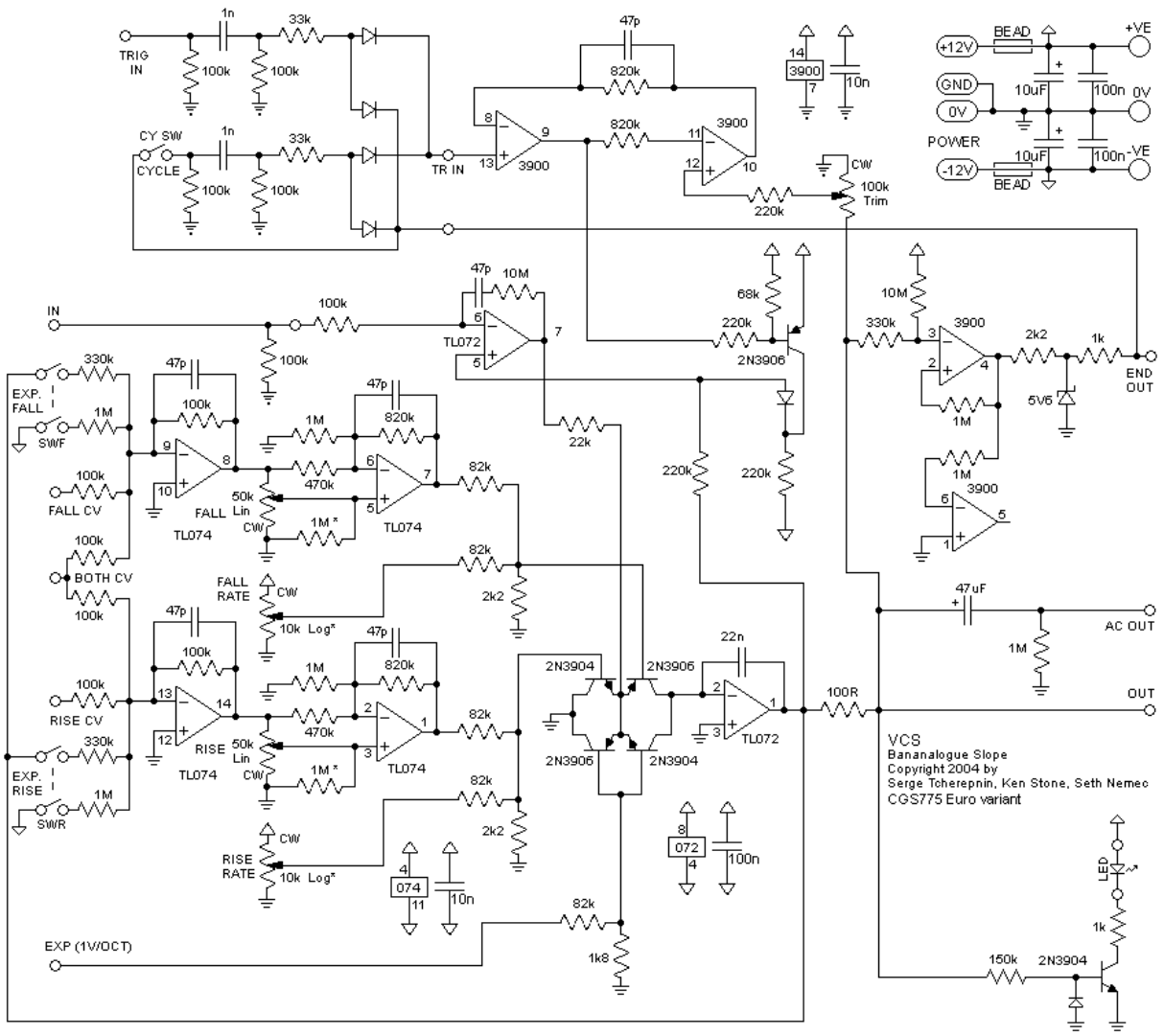
TRIG IN
CY SW
CYCLE
TR IN
CW
100k Trim
220k
3900
820k
47p
10n
+12V
GND
0V
-12V
BEAD
10uF
100n
+VE
0V
-VE
POWER
IN
TL072
10M
68k
220k
2N3906
330k
2k2
1k
END OUT
5V6
EXP. FALL
SW/F
FALL CV
BOTH CV
FALL RATE
10k Log*
FALL
TL074
50k Lin
470k
1M
1M *
82k
22k
47uF
AC OUT
OUT
2N3904
22n
100R
RISE CV
EXP. RISE
SW/R
RISE
RISE RATE
074
EXP (1V/OCT)
1k8
150k
LED
VCS
Bananalogue Slope
Copyright 2004 by
Serge Tcherepnin, Ken Stone, Seth Nemec
CGS775 Euro variant