Dr Lee Peng Hin
Associate Professor

Office: EEE-S1-B1a-09

Tel: +65 6790 4474

Email: ephlee@ntu.edu.sg

NANYANG TECHNOLOGICAL UNIVERSITY

Lecture 1

EE3010: Electrical Devices and Machines

School of Electrical and Electronic Engineering

Topics

1. AC Machines
   i. Induction Motors
2. DC Machines
   i. DC Machinery Fundamentals
   ii. DC Motors
   iii. DC Generators

Books

- Main textbook
  - Stephen J. Chapman, **Electric Machinery Fundamentals**, 5th Edition, McGraw Hill, (TK2000.C466 2012)
- Reference textbook
  - Theodore Wildi, **Electrical Machines, Drives and Power Systems**, 6th Edition, Pearson, (TK2182.W673 2006)

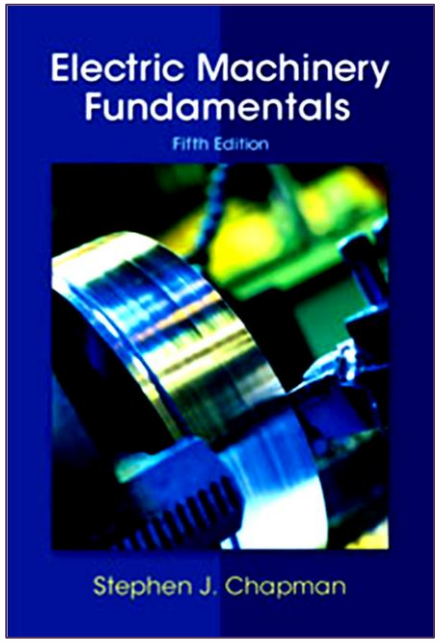

Learning Objectives

By the end of this lecture, you should be able to:

- Describe the basic structure of an induction motor.
- Explain how a rotating magnetic field is created from the three-phase stator.
- Determine and apply the relationships between electrical frequency, the number of poles, and the rotational speed of an induction motor.
- Interpret the concept of slip and its relationship to rotor frequency.

Introduction to Induction Motors

- The induction motor was invented by Nikola Tesla (1856-1943).
- Three-phase induction motors are the motors most frequently encountered in the industry.
- They are simple, rugged, easy to maintain and are less expensive than DC motors of equal power and speed ratings.

Stationary Stator

- It essentially consists of a steel frame housing, and the 3-phase stator windings which are displaced from each other by 120 degrees.
- The windings are placed in slots cut on the inner surface of the stator frame.
- The windings are connected in either wye or delta configurations.
- Electrical power is supplied to the stator windings.

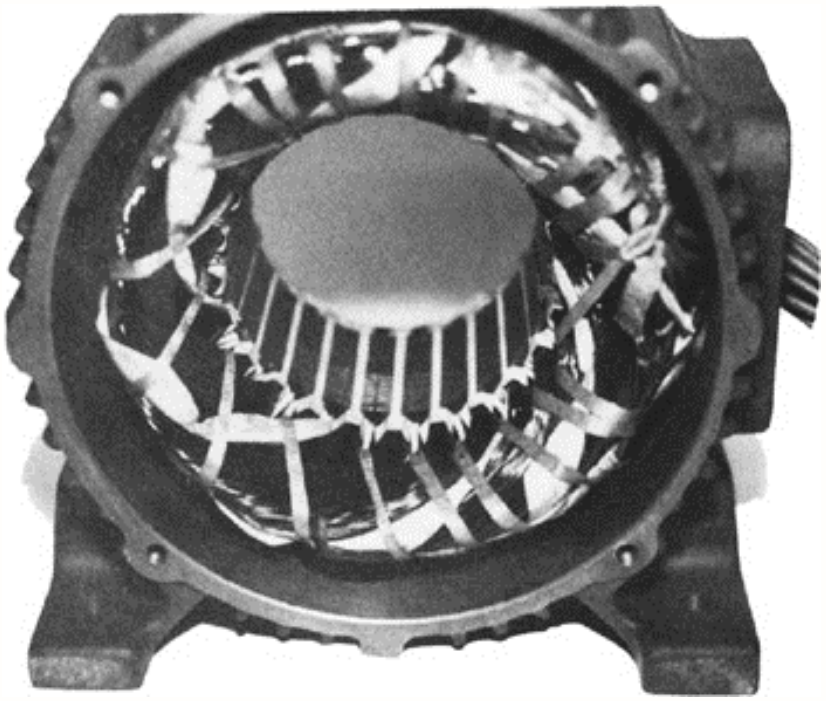

The stator of a typical induction motor, showing the stator windings. (*Used with courtesy of MagneTek, Inc.*)

Revolving Rotor

- It composes of punched laminations which are carefully stacked to create a series of rotor slots to provide space for the rotor windings.

- The type of rotor windings gives rise to two main types of motors:
  - Squirrel-cage induction motors
  - Wound-rotor induction motors

Squirrel-cage Rotor

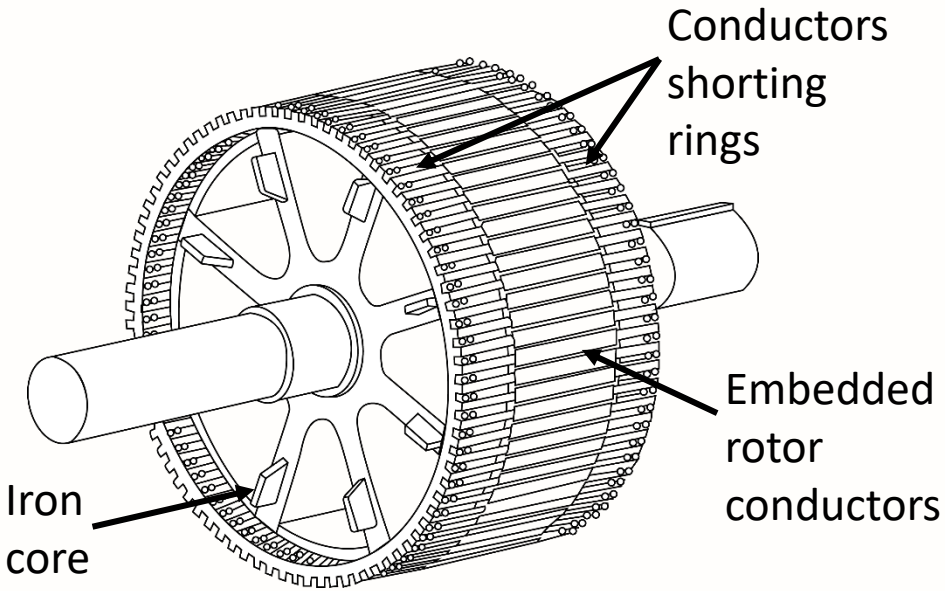

Sketch of squirrel-cage rotor. (*Used with courtesy of General Electric Company*)

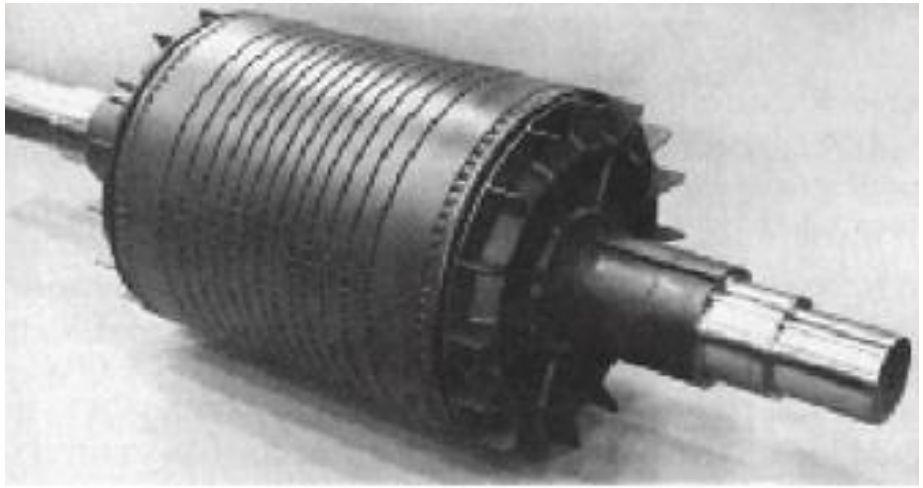

A typical squirrel-cage rotor. (*Used with courtesy of General Electric Company*)

- Series of conducting bars laid into slots carved in the face of the rotor and shorted at either end by large shorting rings.

Wound-Rotor

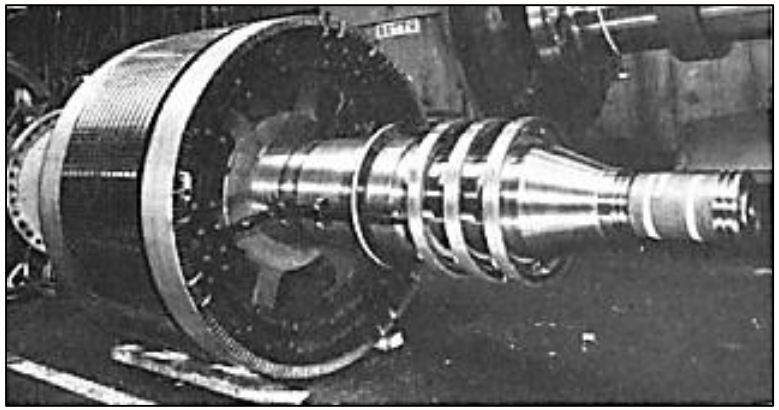

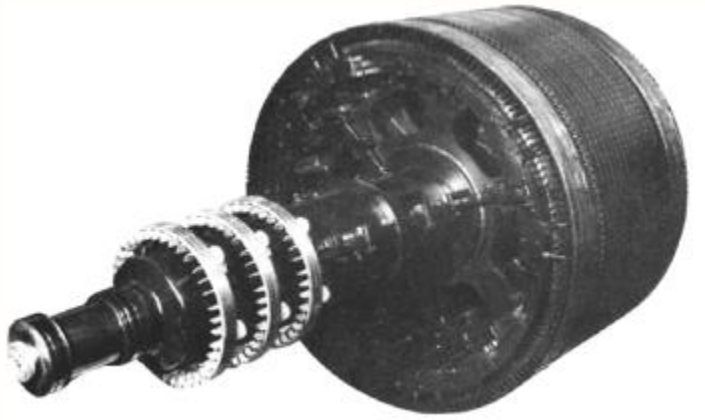

Typical wound-rotors for induction motors. Notice the slip rings.
(*Used with courtesy of General Electric Company*)

- It consists of a set of 3-phase windings similar to the stator windings and usually wye connected. The ends are tied to slip rings on the rotor's shaft.

- The rotor windings are shorted through brushes riding on the slip rings. This allows external resistors to be connected in series with the rotor windings, to modify the torque-speed characteristics.

Wound-Rotor

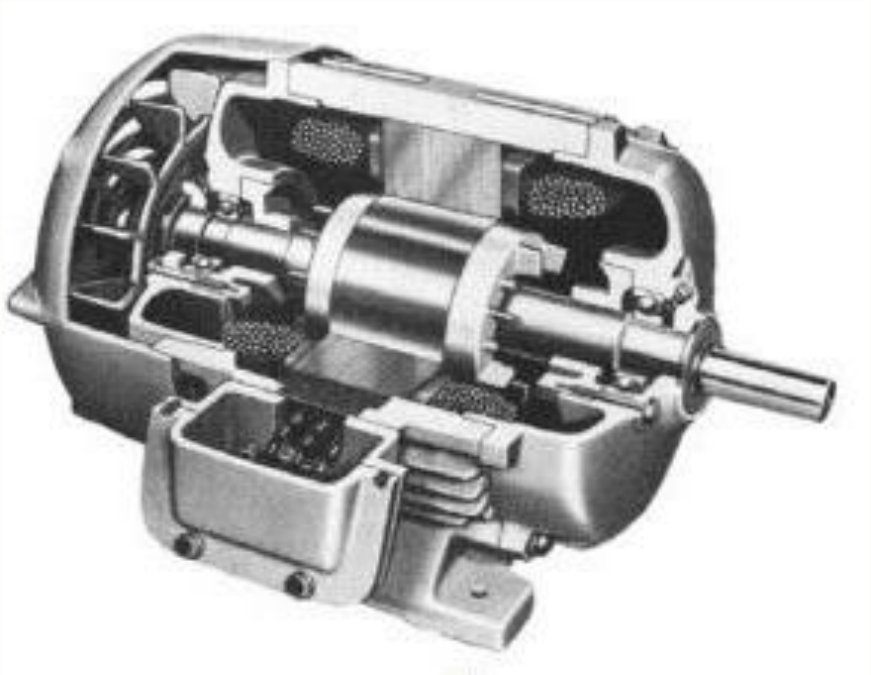

Cutaway diagram of a typical squirrel-cage induction motor. (*Used with courtesy of MagneTek, Inc.*)

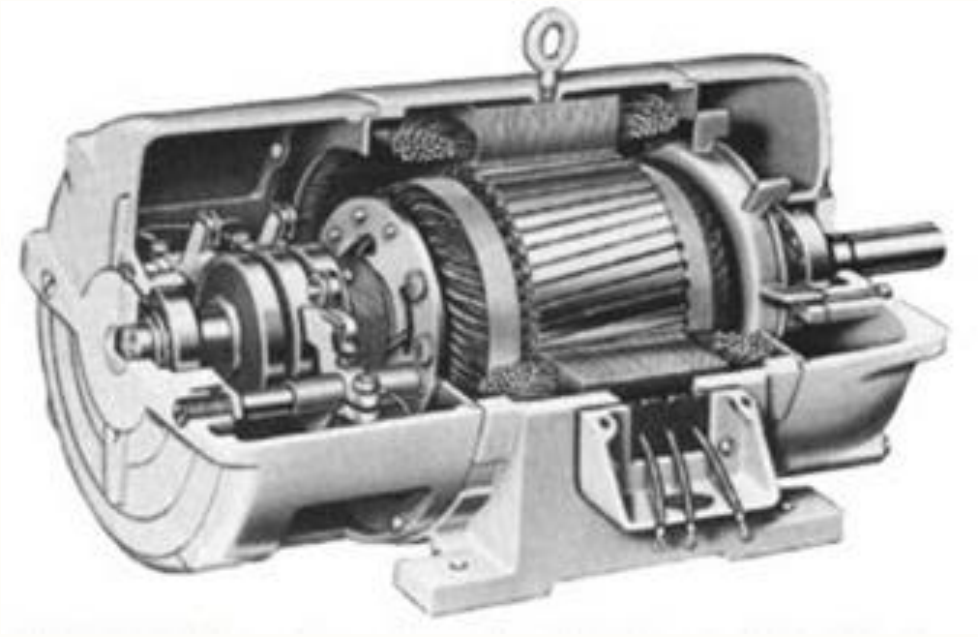

Cutaway diagram of a typical wound-rotor induction motor. (*Used with courtesy of MagneTek, Inc.*)

Operating Principle of an Induction Motor

- The operating principle of the 3-phase induction motor is very straightforward but unfortunately, the simplicity is obscured by the complicated construction of practical induction motors.

- There is no electrical connections to the rotor. The 3-phase supply is connected to the stator windings.

- The transfer of energy from the stationary member to the rotating member is by means of electromagnetic induction.

Operating Principle of an Induction Motor

- A rotating magnetic field, produced by the stator, induces an alternating emf and current in the rotor. The resultant interaction of the induced rotor current with the rotating magnetic field produces motor torque.

- The torque-speed characteristics is directly related to the resistance and reactance of the rotor.

- Hence, different torque-speed characteristics may be obtained by designing rotor circuits with different ratios of rotor resistance to rotor reactance.

The Rotating Magnetic Field

- In a nutshell, the basic principle of all AC motor operation is as follows:
  - If two magnetic fields are present in a machine, a torque will be created which will tend to line up the two magnetic fields.
  - If one magnetic field is produced by the stator of an AC machine and the other one is produced by the rotor of the machine, a torque will be induced in the rotor, which will cause the rotor to turn and align itself with the stator magnetic field.
  - If there are some ways to make the stator magnetic field rotate, the induced torque in the rotor would cause it to constantly “chase” the stator magnetic field around in a circle.

The Rotating Magnetic Field

- How can the stator magnetic field be made to rotate?
- The fundamental principle of AC machine operations:

  If a 3-phase set of currents, each of equal magnitude and differing in phase by 120 degrees, flows in a three-phase windings, then it will produce a rotating magnetic field of constant magnitude.

The Rotating Magnetic Field

- The following demonstrates the above:
  - Three coils spaced 120 electrical degrees apart.
  - A balanced 3-phase currents are applied to them.

$$i_a(t) = I_{\max}\sin(\omega t)\text{A}$$

$$i_b(t) = I_{\max}\sin(\omega t - 120^\circ)\text{A}$$

$$i_c(t) = I_{\max}\sin(\omega t - 240^\circ)\text{A}$$

$$\omega = 2\pi f_s\ ,$$

f_s is the frequency of the supply at the stator

The Rotating Magnetic Field

- The currents will establish three time-varying magnetic field intensity and hence magnetic flux density vectors given by

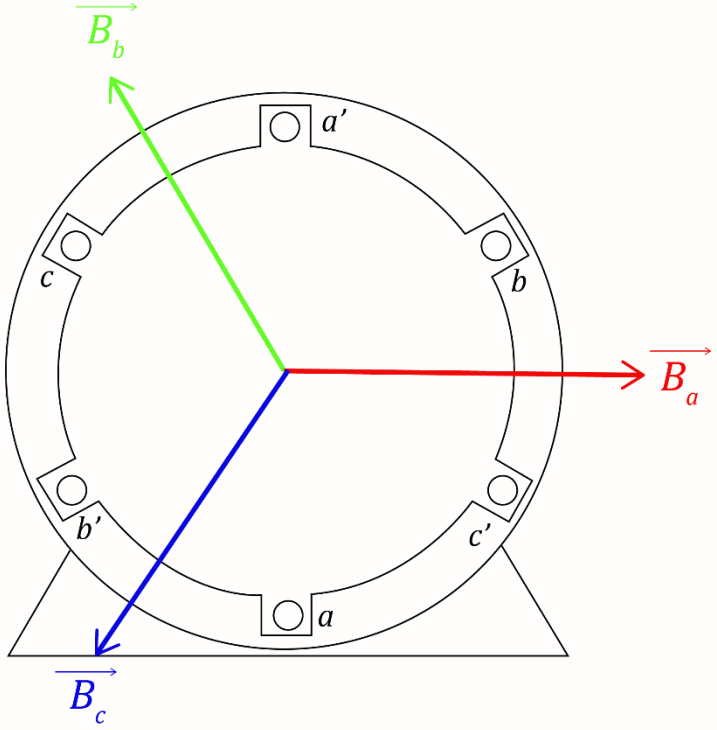

$$\mathbf{B}_a = \hat{B}_a \angle 0^\circ \,\mathrm{T}$$

$$\mathbf{B}_b = \hat{B}_b \angle 120^\circ \,\mathrm{T}$$

$$\mathbf{B}_c = \hat{B}_c \angle 240^\circ \,\mathrm{T}$$

$$\hat{B}_a = B_{\max} \sin(\omega t)$$

$$\hat{B}_b = B_{\max} \sin(\omega t - 120^\circ)$$

$$\hat{B}_c = B_{\max} \sin(\omega t - 240^\circ)$$

The current flows into the *a* end and out of the *a'* end of the coil.

The Rotating Magnetic Field

- The resultant net magnetic flux density in the stator is the sum of the individual flux density.

$$\mathbf{B}_{net} = \mathbf{B}_a + \mathbf{B}_b + \mathbf{B}_c$$

$$= 1.5B_{\max}\angle(\omega t - 90^\circ)\mathrm{T}$$

- We can examine its value at specific instant of time.

$$\text{At } \omega t = 0^\circ, \mathbf{B}_{net} = 1.5B_{\max}\angle(-90^\circ)\mathrm{T}$$

$$\text{At } \omega t = 90^\circ, \mathbf{B}_{net} = 1.5B_{\max}\angle 0^\circ\,\mathrm{T}$$

  - The magnitude of the field is *constant*.
  - It rotates counter-clockwise at an angular velocity.
  - The speed of the rotating flux is called *synchronous speed,* ω_{sync} rad/s.

The Rotating Magnetic Field – Two-pole

- The rotating magnetic field in a stator represented as moving north and south stator poles – **two-pole**.
- The poles complete one complete mechanical rotation around the stator surface for each electrical cycle of the applied current.
- Therefore, the mechanical speed of rotation of the magnetic field in revs per sec is equal to the electric frequency in hertz.

$$\omega_{sync} = \omega \text{ rad/s}$$

$$\Rightarrow n_{sync}\left(\frac{2\pi}{60}\right) = 2\pi f_s$$

$$\Rightarrow n_{sync} = \frac{120 f_s}{2} \text{ rpm}$$

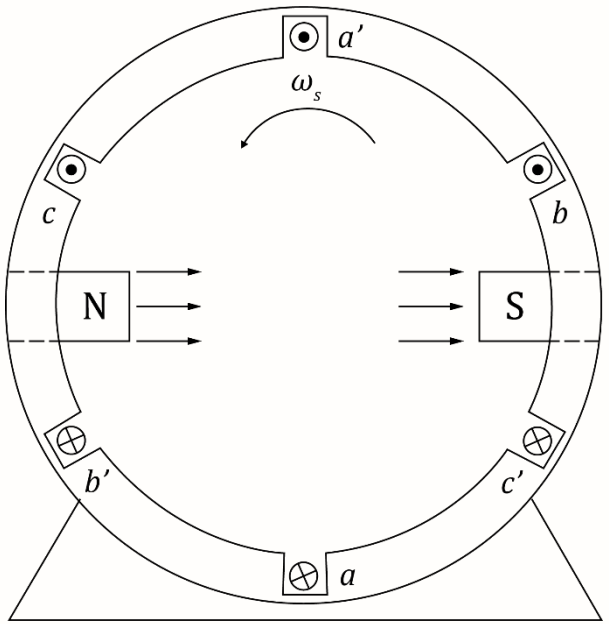

Two-pole rotating magnetic field.

The Rotating Magnetic Field – Four-pole

- In the **four-pole** stator rotating magnetic field, the stator windings are doubled. In this case, each pole moves halfway around the stator surface in one electrical cycle.

- The electrical frequency of the current is twice the mechanical frequency of rotation.

$$2\omega_{sync} = \omega$$

$$\Rightarrow n_{sync} = \frac{120 f_s}{4}$$

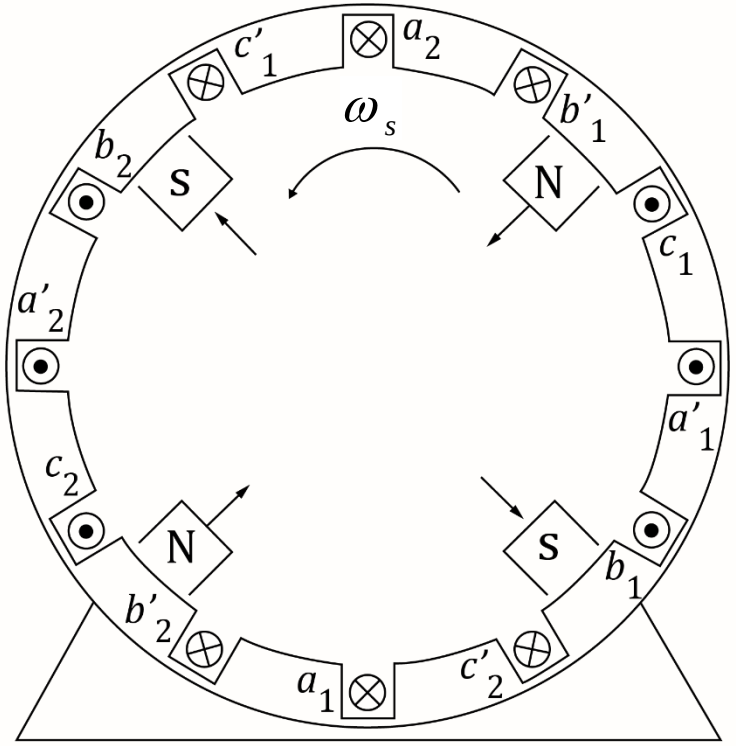

Four-pole rotating magnetic field.

The Rotating Magnetic Field

Therefore,

$$n_{sync} = \frac{120 f_s}{p}$$

where

$f_s =$ frequency of the 3-phase supply in Hz

$n_{sync} =$ synchronous speed, i.e., the speed of the rotating flux in r/min

$p =$ number of poles formed by the stator winding

Example 1

Determine the synchronous speed of a six-pole, 460 V, 60 Hz induction motor if the frequency is reduced to 85 percent of its rated value.

$$n_{sync} = \frac{120 f_s}{p}$$

$$= \frac{120(60)(0.85)}{6}$$

$$= 1020 \text{ r/min}$$

Remarks

- The rotor consists of either conductor bars or windings.
- As the stator magnetic field rotates, by Faraday's law, a voltage is induced in the rotor conductors and a current flows in its closed circuit. Thus, an electromagnetic torque will be produced.
- As a result, the rotor starts rotating in the direction of the revolving magnetic field, and ultimately reaches a steady-state speed which is close to the synchronous speed.

Remarks

- The rotor speed can never be equal to the synchronous speed.
- If the rotor did turn at the same speed as the field (synchronous speed), the flux would no longer cut the rotor bars and the induced voltage and current would fall to zero. Under these conditions, the force acting on the rotor bars would also become zero, and the friction and windage would immediately cause the rotor to slow down.
- An induction motor can, thus, speed up to near-synchronous speed, but it can never exactly reach synchronous speed.

Concept of Rotor Slip

- The voltage induced in the rotor bar depends on the speed of the rotor relative to the magnetic fields. Two terms are used to define the relative motion of the rotor and magnetic fields.

a) Slip speed: $n_{slip} = n_{sync} - n_m$

$$\text{where } n_{slip} = \text{slip speed of the machine, r/min}$$

$$n_{sync} = \text{speed of the magnetic field, sync speed, r/min}$$

$$n_m = \text{mechanical shaft speed of motor, r/min}$$

Concept of Rotor Slip

b) Slip:

$$\text{slip, } s = \frac{n_{slip}}{n_{sync}}\left(\text{x}100\%\right) = \frac{n_{sync} - n_m}{n_{sync}}\left(\text{x}100\%\right)$$

$$= \frac{\omega_{sync} - \omega_m}{\omega_{sync}}\left(\text{x}100\%\right)$$

$$\boxed{\begin{aligned} n_m &= (1-s)n_{sync} \\ \omega_m &= (1-s)\omega_{sync} \end{aligned}}$$

$s = 0 \Rightarrow$ rotor turns at synchronous speed

$s = 1 \Rightarrow$ rotor is stationary

Electrical Frequency on the Rotor

- An induction motor works by inducing voltages and currents in the rotor of the machine – sometimes called a rotating transformer.

- Unlike a transformer, the rotor (secondary) frequency is not the same as the stator (primary) frequency.

$$s = 0 \Rightarrow n_m = n_{sync},\ f_r = 0$$

$$s = 1 \Rightarrow n_m = 0,\ \text{rotor is stationary},\ f_r = f_s.$$

The rotor frequency

$$f_r = s f_s$$

$$f_r = \frac{p}{120}(n_{sync} - n_m)$$

Example 2

A 208 V, 10 horse-power (hp), four-pole, 60 Hz, wye-connected induction motor has a full-load slip of 5 percent.

a) What is the synchronous speed of the motor?

b) What is the rotor speed of this motor at the rated load?

c) What is the rotor frequency of this motor at the rated load?

d) What is the shaft torque of this motor at the rated load?

(Solutions →)

Example 2 - Solutions

a) $$n_{sync} = \frac{120 f_s}{p} = \frac{120(60)}{4} = 1800 \text{ r/min}$$

b) $$\text{slip, } s = \frac{n_{sync} - n_m}{n_{sync}} \Rightarrow 0.05 = \frac{1800 - n_m}{1800}$$

$$\Rightarrow n_m = 1710 \text{ r/min}$$

c) $$f_r = s f_s = 0.05(60) = 3 \text{ Hz}$$

d) $$T_{load}\omega_m = P_{out} \Rightarrow T_{load}(1710(2\pi)/60) = 10(746 \text{ W/hp})$$

$$\Rightarrow T_{load} = 41.7 \text{ N.m}$$

Summary

In this lecture, you have learnt:

- A rotating magnetic field is produced when the stator is connected to a three-phase supply. Due to transformer action, voltages and currents are induced in the rotor circuit.
- There are two types of induction motors: squirrel-cage and wound-rotor.
- An induction motor operates at near synchronous speed, but never exactly at the synchronous speed.
- The relationships between electrical frequency, number of poles, synchronous speed, rotor speed and slip.

References

No.	Slide No.	Image	Reference
1	4	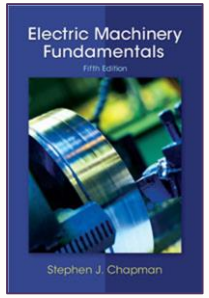	Reprinted from *Electric Machinery Fundamentals, 5th ed.*, (Cover), by S.J. Chapman, 2012, New York, NY: McGraw Hill. Copyright 2012 by The McGraw-Hill Companies, Inc. Reprinted with permission.
2	7	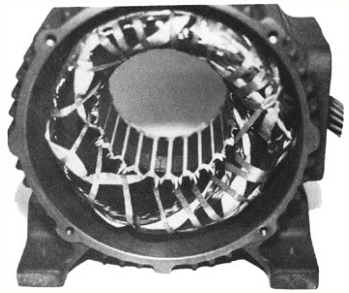	Reprinted from *Electric Machinery Fundamentals, 5th ed.*, (p. 308), by S.J. Chapman, 2012, New York, NY: McGraw Hill. Copyright 2012 by The McGraw-Hill Companies, Inc. Reprinted with permission.
3	9	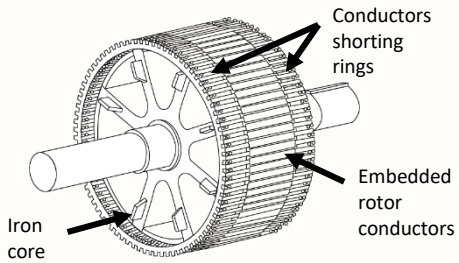	Reprinted from *Electric Machinery Fundamentals, 5th ed.*, (p. 308), by S.J. Chapman, 2012, New York, NY: McGraw Hill. Copyright 2012 by The McGraw-Hill Companies, Inc. Reprinted with permission

References

No.	Slide No.	Image	Reference
4	9	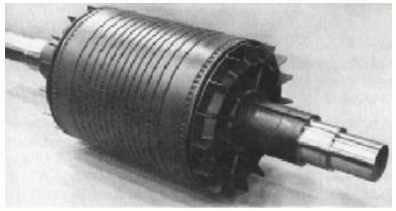	Reprinted from *Electric Machinery Fundamentals, 5th ed.*, (p. 308), by S. J. Chapman, 2012, New York, NY: McGraw Hill. Copyright 2012 by The McGraw-Hill Companies, Inc. Reprinted with permission.
5	10	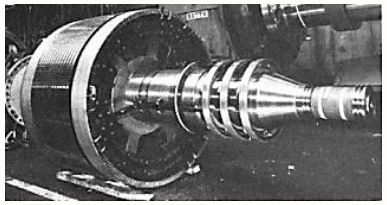	Reprinted from *Electric Machinery Fundamentals, 5th ed.*, (p. 310), by S. J. Chapman, 2012, New York, NY: McGraw Hill. Copyright 2012 by The McGraw-Hill Companies, Inc. Reprinted with permission.
6	10	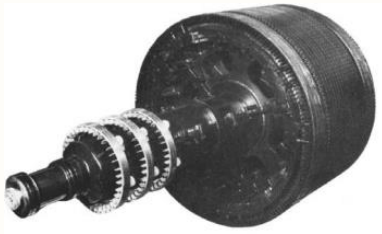	Reprinted from *Electric Machinery Fundamentals, 5th ed.*, (p. 310), by S. J. Chapman, 2012, New York, NY: McGraw Hill. Copyright 2012 by The McGraw-Hill Companies, Inc. Reprinted with permission.

References

No.	Slide No.	Image	Reference
7	11	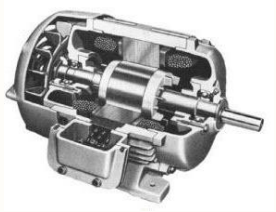	Reprinted from *Electric Machinery Fundamentals, 5th ed.*, (p. 309), by S. J. Chapman, 2012, New York, NY: McGraw Hill. Copyright 2012 by The McGraw-Hill Companies, Inc. Reprinted with permission.
8	11	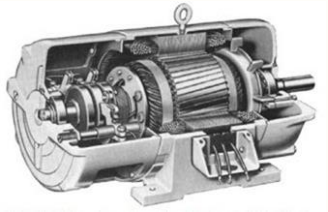	Reprinted from *Electric Machinery Fundamentals, 5th ed.*, (p. 311), by S. J. Chapman, 2012, New York, NY: McGraw Hill. Copyright 2012 by The McGraw-Hill Companies, Inc. Reprinted with permission.
9	17	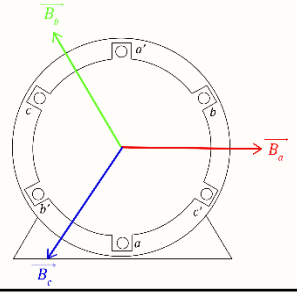	Adapted from *Electric Machinery Fundamentals, 5th ed.*, (p. 161), by S. J. Chapman, 2012, New York, NY: McGraw Hill. Copyright 2012 by The McGraw-Hill Companies, Inc. Reprinted with permission.

References

No.	Slide No.	Image	Reference
10	19	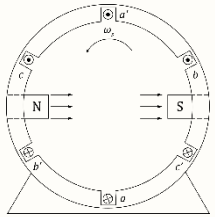	Adapted from *Electric Machinery Fundamentals, 5th ed.*, (p. 165), by S. J. Chapman, 2012, New York, NY: McGraw Hill. Copyright 2012 by The McGraw-Hill Companies, Inc. Adapted with permission.
11	20	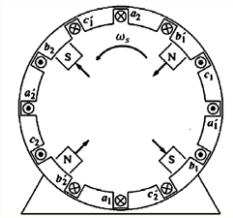	Adapted from *Electric Machinery Fundamentals, 5th ed.*, (p. 166), by S. J. Chapman, 2012, New York, NY: McGraw Hill. Copyright 2012 by The McGraw-Hill Companies, Inc. Adapted with permission.

Lecture 2

EE3010: Electrical Devices and Machines

School of Electrical and Electronic Engineering

Associate Professor Lee Peng Hin
Tel: +65 6790 4474 | Email: ephlee@ntu.edu.sg

Learning Objectives

By the end of this lecture, you should be able to:

- Describe the equivalent circuit of an induction motor.
- Describe the power flows and power flow diagram of an induction motor.
- Calculate the various powers and motor efficiency of an induction motor from given power losses and operating conditions.

The Equivalent Circuit of an Induction Motor

- Because the induction of voltages and currents in the rotor circuit of an induction motor is essentially a transformer action, the equivalent circuit of an induction motor is very similar to that of a transformer.

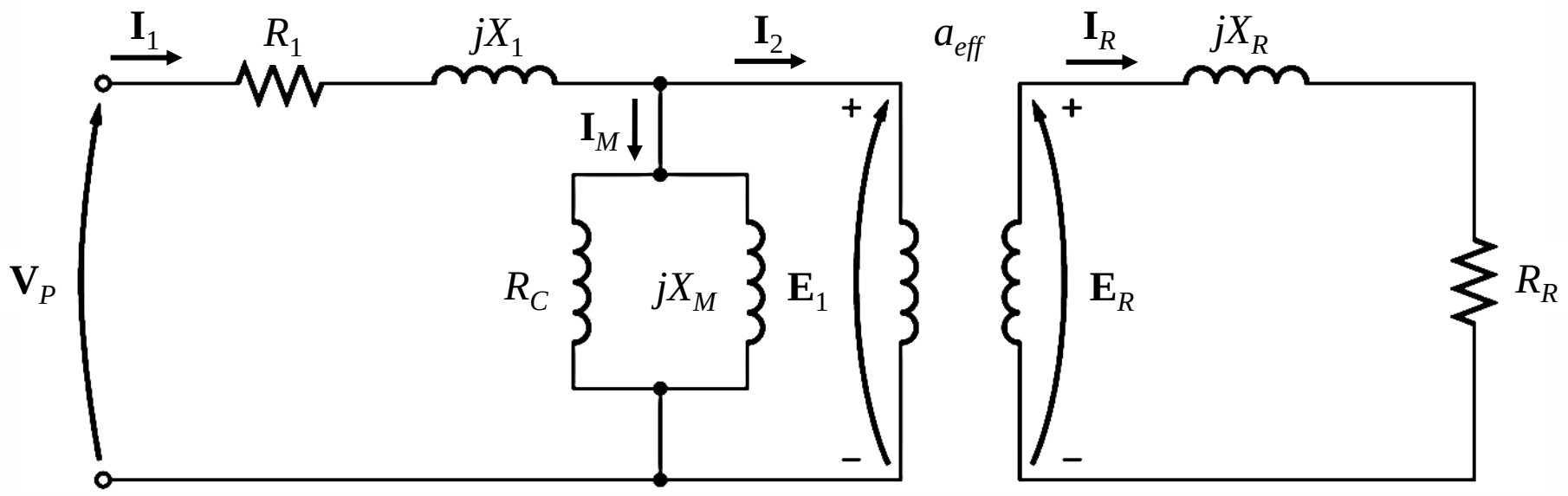

Per phase equivalent circuit of an induction motor, with rotor and stator connected by an ideal transformer of turns ratio a_{eff}.

The Equivalent Circuit of an Induction Motor

- The circuit parameters per phase:
  - R_1 : Stator winding resistance
  - X_1 : Stator leakage reactance
  - R_R : Rotor winding resistance
  - X_R : Rotor leakage reactance
  - a_{eff} : Effective turns ratio coupling E_1 and E_{R}
  - R_C : Resistance representing core loss
  - X_M : Magnetising reactance

The Rotor Circuit Model

- In an induction motor, when a voltage is applied to the stator windings, a voltage is induced in the rotor windings.
- The induced voltage is 0 V when the rotor moves at synchronous speed.
- When the rotor is stationary (i.e. locked-rotor or blocked-rotor conditions), the largest voltage and rotor frequency are induced in rotor.

The Rotor Circuit Model

- At any other speed,
  - The rms value of the induced voltage generated in the rotor as it is swept by the rotating flux is

$$E_R = 4.44(f_r)N_r\phi_{\max} = 4.44(sf_s)N_r\phi_{\max} = sE_{RO}$$

where $E_{RO} = 4.44(f_s)N_r\phi_{\max}$ is the rotor induced voltage at locked-rotor conditions ($f_r = f_s$, $s = 1$).

  - The reactance depends on the inductance and the frequency of the voltage and current in the rotor.

$$X_R = \omega_r L_R = 2\pi(f_r)L_R = 2\pi(sf_s)L_R = sX_{RO}$$

where X_{RO} is the blocked-rotor reactance.

Example 1

The frequency and induced voltage in the rotor of a certain six-pole wound-rotor induction motor, whose shaft is blocked, are 60 Hz and 100 V, respectively. Determine the corresponding values when the rotor is running at 1100 r/min.

$$n_{sync} = \frac{120 f_s}{p} = \frac{120(60)}{6} = 1200 \text{ r/min}$$

$$s = \frac{n_{sync} - n_m}{n_{sync}} = 0.0833$$

$$f_r = s f_s = 5 \text{ Hz}$$

$$E_R = s E_{RO} = 8.33 \text{ V}$$

The Rotor Circuit Model

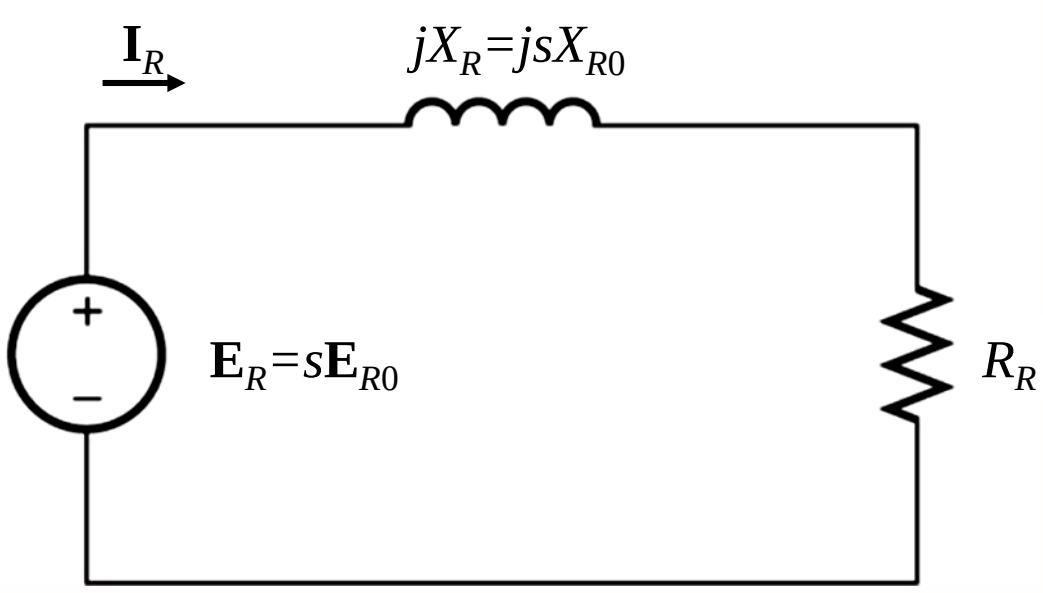

The rotor circuit model of an induction motor.

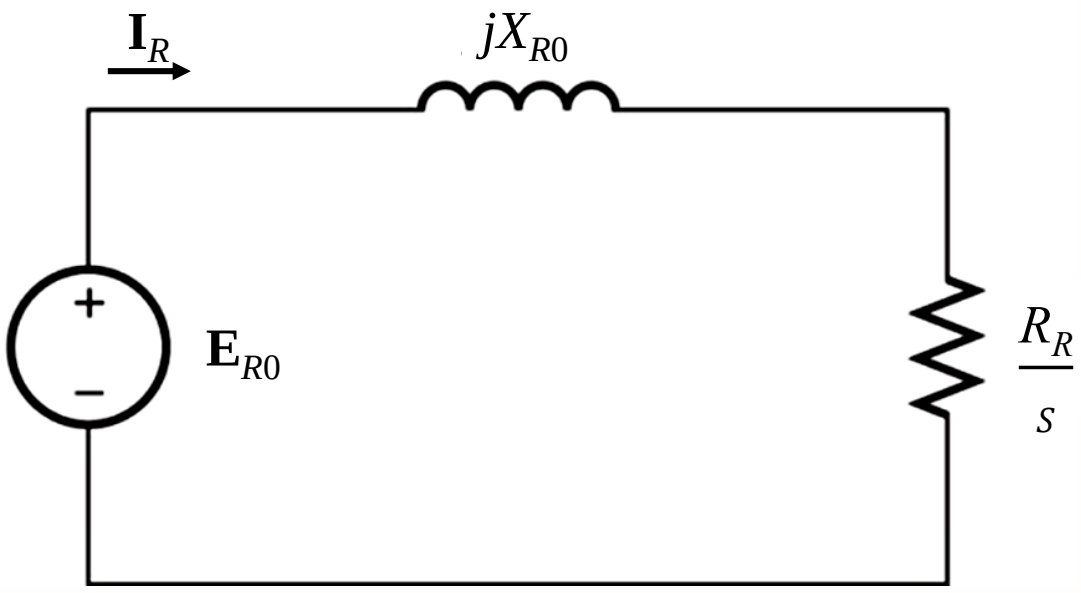

The rotor circuit model with all the frequency (slip) effects concentrated in resistor $\frac{R_R}{s}$.

The Rotor Circuit Model

- Rotor current as a function of rotor speed

$$\mathbf{I}_R = \frac{\mathbf{E}_{RO}}{R_R / s + jX_{RO}}$$

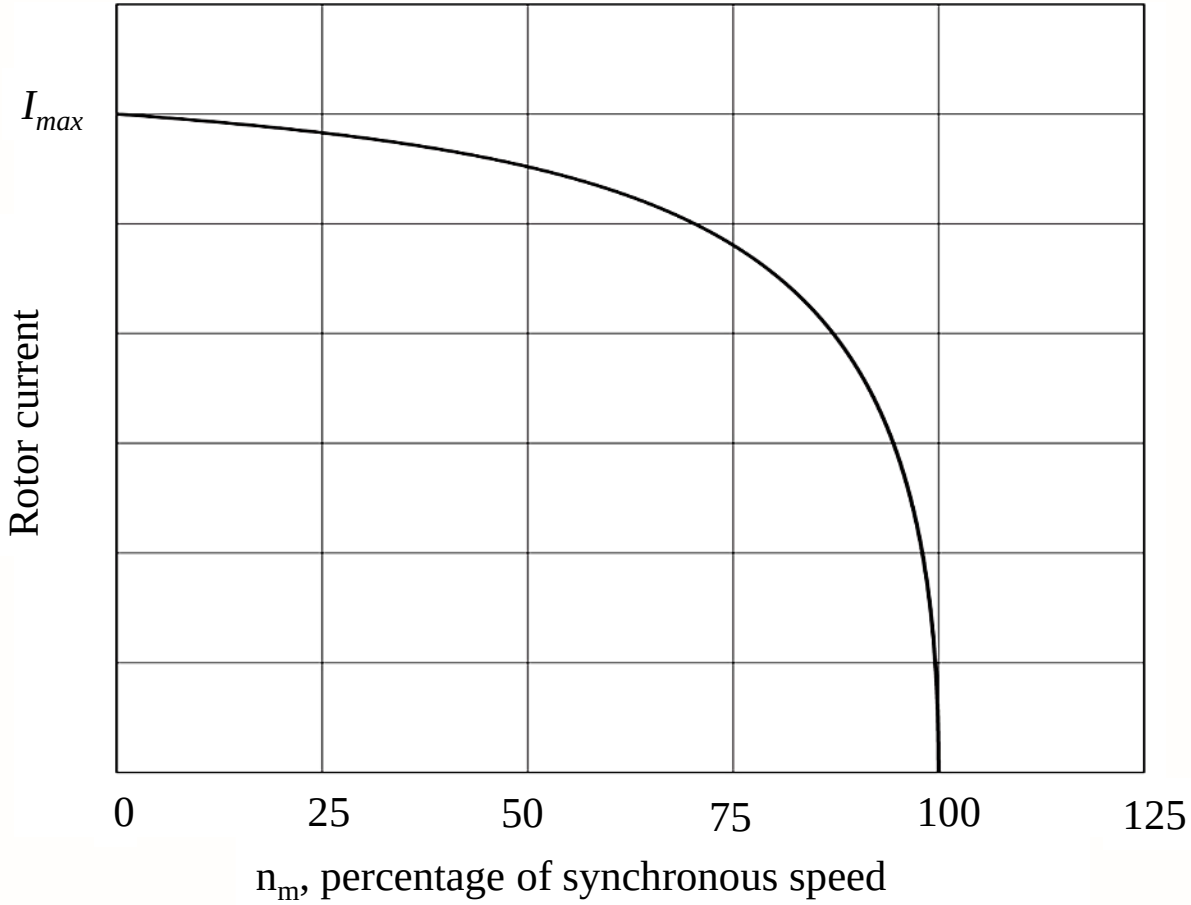

The Final Equivalent Circuit of an Induction Motor

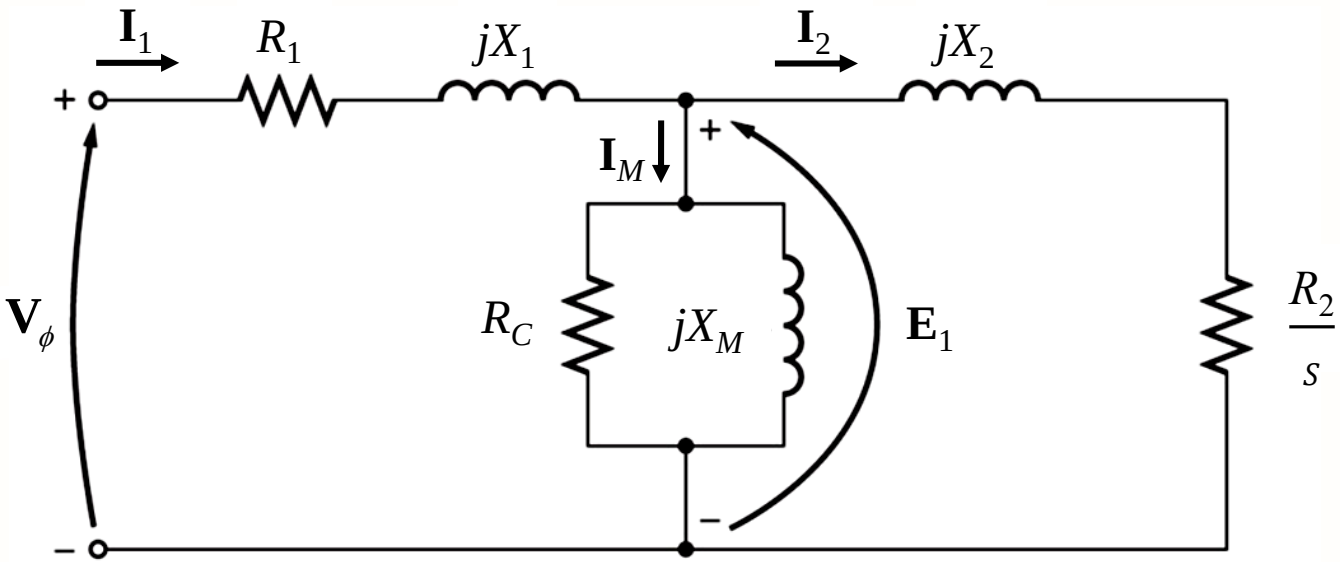

The per phase equivalent circuit of an induction motor referred to the stator.

- The core losses (W) are usually <u>lumped together with friction, windage and stray losses and called the rotational losses</u>.
- Hence, unless specified otherwise, R_C will not appear in the equivalent circuit subsequently.

The Final Equivalent Circuit of an Induction Motor

- The referred rotor parameters to the stator side are:

$$\mathbf{E}_1 = a_{eff}\mathbf{E}_{RO} \ ,$$

$$\mathbf{I}_2 = \frac{\mathbf{I}_R}{a_{eff}} \text{ where } \mathbf{I}_R = \frac{\mathbf{E}_{RO}}{R_R/s + jX_{RO}}$$

$$R_2 = a_{eff}^2 R_R \ , \qquad X_2 = a_{eff}^2 X_{RO}$$

$$a_{eff} = \text{effective turns ratio}$$

Losses and Power-Flow Diagram in Induction Motors

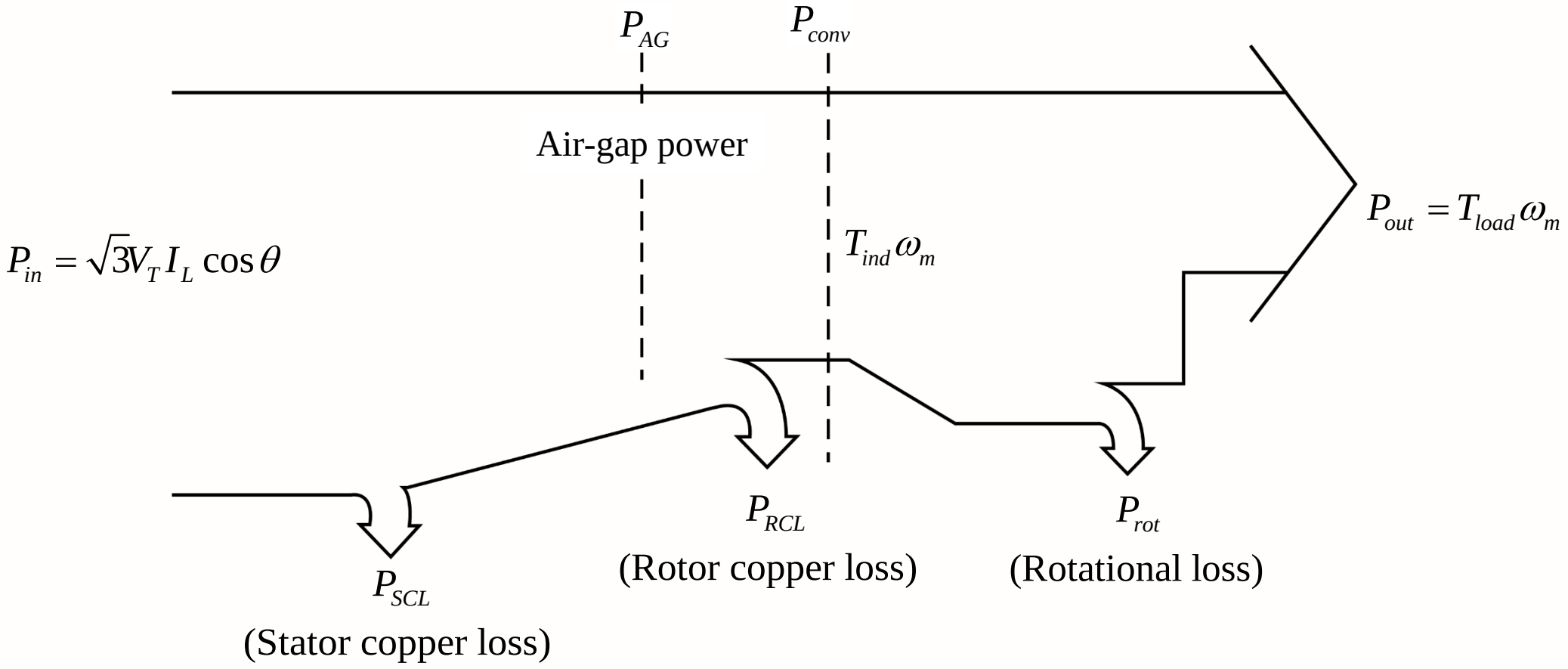

Power flow diagram of an induction motor.

Losses and Power-Flow Diagram in Induction Motors

- Induction motor basically is a rotating transformer.
- Input is 3-phase supply.
- Output is mechanical power.
- Air gap power is the power transferred to the rotor of the machine across the air gap between the stator and the rotor.
- The converted power is the power converted from electrical to mechanical form.
- The core losses are usually <u>lumped together with the friction, windage and stray load losses and called the rotational losses</u>.

Example 2

A 480 V, 60 Hz, 50-hp, three-phase induction motor is drawing 60 A at 0.85 pf lagging. The stator copper losses are 2 kW, and the rotor copper losses are 700 W. The total rotational losses which includes the friction, windage and core losses are 2400 W, and the stray losses are negligible. Find:

a) The air-gap power P_{AG}

b) The converted power P_{conv}

c) The output power P_{out}

d) The efficiency of the motor η

(Solutions →)

Example 2 – Solutions

a) $$P_{\text{in}} = \sqrt{3} V_{line} I_{line} \cos\theta$$

$$= \sqrt{3}(480)(60)0.85 = 42.4 \text{ kW}$$

$$P_{AG} = P_{in} - P_{SCL} = 40.4 \text{ kW}$$

b) $$P_{conv} = P_{AG} - P_{RCL} = 39700 \text{ W}$$

c) $$P_{out} = P_{conv} - P_{rot} = 37.3 \text{ kW}$$

d) $$\text{The efficiency of the motor } \eta = \frac{P_{out}}{P_{in}}(100\%) = 88\%$$

Summary

In this lecture, you have learnt:

- The equivalent circuit of an induction motor turns out to be very similar to the equivalent circuit of a transformer.
- The power flow diagram of an induction motor.
- The computations of the various powers and motor efficiency of an induction motor from given power losses and operating conditions.

References

No.	Slide No.	Image	Reference
1	3	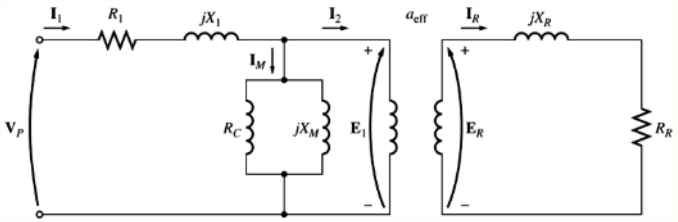	Reprinted from *Electric Machinery Fundamentals, 5th ed.*, (p. 318), by S. J. Chapman, 2012, New York, NY: McGraw-Hill. Copyright 2012 by The McGraw-Hill Companies, Inc. Reprinted with permission.
2	8	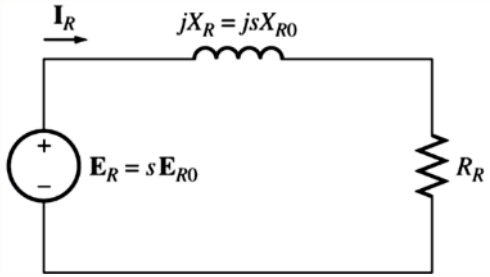	Reprinted from *Electric Machinery Fundamentals, 5th ed.*, (p. 318), by S. J. Chapman, 2012, New York, NY: McGraw-Hill. Copyright 2012 by The McGraw-Hill Companies, Inc. Reprinted with permission.
3	8	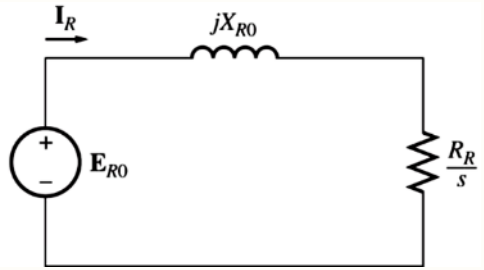	Reprinted from *Electric Machinery Fundamentals, 5th ed.*, (p. 319), by S. J. Chapman, 2012, New York, NY: McGraw-Hill. Copyright 2012 by The McGraw-Hill Companies, Inc. Reprinted with permission.

References

No.	Slide No.	Image	Reference
4	9	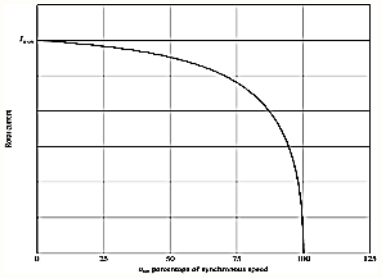	Reprinted from *Electric Machinery Fundamentals, 5th ed.*, (p. 319), by S. J. Chapman, 2012, New York, NY: McGraw-Hill. Copyright 2012 by The McGraw-Hill Companies, Inc. Reprinted with permission.
5	10	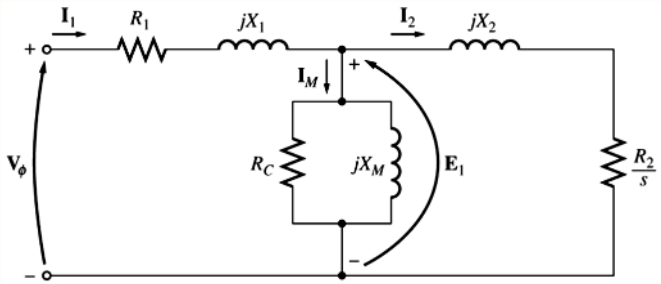	Reprinted from *Electric Machinery Fundamentals, 5th ed.*, (p. 321), by S. J. Chapman, 2012, New York, NY: McGraw-Hill. Copyright 2012 by The McGraw-Hill Companies, Inc. Reprinted with permission.
6	12	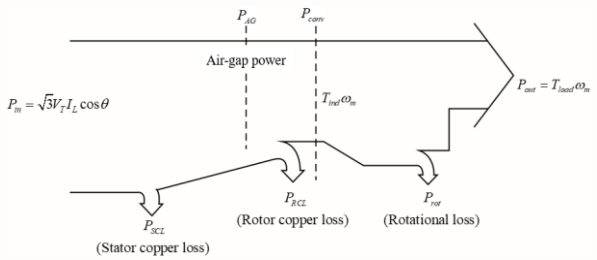	Adapted from *Electric Machinery Fundamentals, 5th ed.*, (p. 322), by S. J. Chapman, 2012, New York, NY: McGraw-Hill. Copyright 2012 by The McGraw-Hill Companies, Inc. Adapted with permission.

Lecture 3

EE3010: Electrical Devices and Machines

School of Electrical and Electronic Engineering

Associate Professor Lee Peng Hin
Tel: +65 6790 4474 | Email: ephlee@ntu.edu.sg

Learning Objectives

By the end of this lecture, you should be able to:

- Describe the respective powers, derive their relationships and equations for an induction motor.
- Explain the notions of developed torque and output torque and how to compute them.
- Use the induction motor equivalent circuit to study and predict the performance of the motor for a given operating condition.

Power and Torque in Induction Motors

From the per-phase equivalent circuit,

- The stator copper losses $P_{SCL} = 3I_1^2 R_1$
- The air-gap power $P_{AG} = P_{in} - P_{SCL}$
- Since X_2 does not consume real power, $P_{AG} = 3I_2^2\left(\frac{R_2}{s}\right)$
- The rotor copper losses $P_{RCL} = 3I_2^2 R_2$
- The converted power, also called developed power,

$$P_{dev} = P_{conv} = P_{AG} - P_{RCL} = 3I_2^2\left(R_2\left(\frac{1-s}{s}\right)\right)$$

Power and Torque in Induction Motors

- Also, $P_{RCL} = sP_{AG}$, $P_{conv} = (1-s)P_{AG}$, $P_{out} = P_{conv} - P_{rot}$

- The induced torque T_{ind} is the torque generated by the internal electrical to mechanical power conversion. Also called developed torque T_{dev}.

$$T_{ind} = T_{dev} = \frac{P_{conv}}{\omega_m} = \frac{(1-s)P_{AG}}{(1-s)\omega_{sync}} = \frac{P_{AG}}{\omega_{sync}}$$

Separating Rotor Cu Losses and the Power Converted

- The air-gap power $P_{AG} = 3I_2^2\left(\frac{R_2}{s}\right)$
- Rotor copper losses $P_{RCL} = 3I_2^2 R_2$
- The converted power

$$P_{conv} = P_{AG} - P_{RCL} = 3I_2^2\left\{R_2\left(\frac{1-s}{s}\right)\right\}$$

- Thus, $R_{conv} = R_2\left(\frac{1-s}{s}\right)$

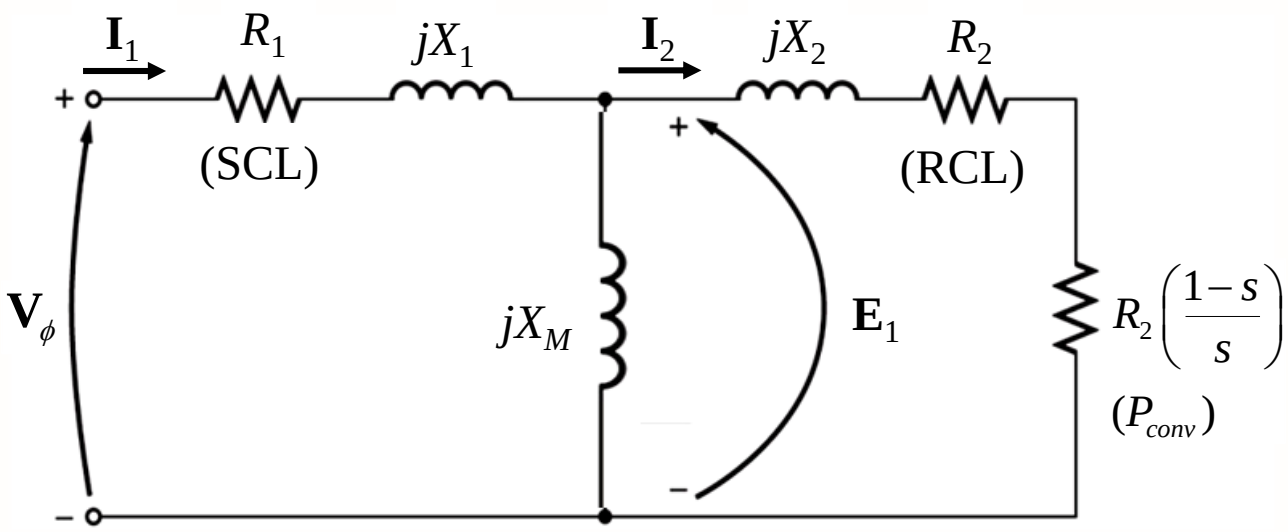

The per phase equivalent circuit with rotor copper losses and power converted separated.

Example 1

A 460 V, 60 Hz, four-pole induction motor is wye-connected. The core losses are lumped together with the friction and windage losses and the stray losses to give the total rotational losses of 1100 W and they are assumed to be constant. The impedances per phase referred to the stator circuit are:

$$R_1 = 0.641\Omega\ , \quad R_2 = 0.332\Omega\ , \quad X_1 = 1.106\Omega\ ,$$
$$X_2 = 0.464\Omega\ , \quad X_M = 26.3\Omega$$

For a rotor slip of 2.2% at the rated voltage and rated frequency, find the motor's

a) Speed
b) Input stator current
c) Input power factor
d) P_{conv} and P_{out}
e) T_{ind} and T_{load}
f) Efficiency

(Solutions →)

Example 1 – Solutions

a) $$n_{sync} = \frac{120 f_s}{p} = \frac{120(60)}{4} = 1800 \text{ r/min}$$

$$\Rightarrow n_m = (1-s)n_{sync} = 1760 \text{ r/min}$$

b) The total impedance per phase is calculated as

$$\mathbf{Z}_{total} = 11.72 + j7.79 = 14.07\angle 33.6°\Omega$$

$$\Rightarrow \mathbf{I}_1 = \frac{\mathbf{V}_\phi}{\mathbf{Z}_{total}} = \frac{266\angle 0°}{14.07\angle 33.6°} = 18.88\angle -33.6° \text{ A}$$

c) The pf is cos(33.6°) = 0.833 lagging.

Example 1 – Solutions

d) $P_{AG} = P_{in} - P_{SCL} = \sqrt{3}V_{line}I_{line}\cos\theta - 3I_1^2R_1$

$= \sqrt{3}(460)(18.88)0.833 - 3(18.88)^2 0.641 = 11845 \text{ W}$

$P_{conv} = (1-s)P_{AG} = 11585 \text{ W} \Rightarrow P_{out} = P_{conv} - P_{rot} = 10485 \text{ W}$

e) $T_{ind} = \dfrac{P_{conv}}{\omega_m} = \dfrac{P_{AG}}{\omega_{sync}} = 62.8 \text{ N.m.}$ $T_{load} = \dfrac{P_{out}}{\omega_m} = 56.9 \text{ N.m.}$

f) The efficiency of the motor $\eta = \dfrac{P_{out}}{P_{in}} \times 100\% = 83.7\%$

Example 2

A three-phase 230 V, 60 Hz, 100-hp (1 hp = 746 W), six-pole induction motor operating at rated conditions has an efficiency of 91 % and draws a line current of 248 A. The stator copper and rotor copper losses are 2803 W and 1549 W, respectively. Determine:

a) Power input

b) Total losses

c) Air-gap power

d) Rotor speed

e) Input power factor

f) Rotational losses

(Solutions →)

Example 2 – Solutions

a) $$\text{Eff } \eta = \frac{(P_{out} = 100 \text{ x } 746)}{P_{in}} \Rightarrow P_{in} = 81978 \text{ W}$$

b) $$\text{Total losses} = P_{in} - P_{out} = 7378 \text{ W}$$

c) $$P_{AG} = P_{in} - P_{SCL} = 79175 \text{ W}$$

Example 2 – Solutions

d) From $P_{RCL} = sP_{AG} \Rightarrow s = 0.01956$

$$n_{sync} = 120\frac{f_s}{p} = 1200 \text{ rpm}$$

$$n_m = (1-s)\, n_{sync} = 1176 \text{ rpm}$$

e) From $P_{in} = \sqrt{3}V_{line}I_{line}\cos\theta \Rightarrow \cos\theta = 0.83$

f) $P_{rot} = \text{Total losses} - P_{SCL} - P_{RCL} = 3026 \text{ W}$

Summary

In this lecture, you have learnt:

- The equations that relate the respective powers and torques in an induction motor.
- The separation of air-gap power into the rotor copper loss and the power converted in an induction motor, and representing them as distinct elements in the equivalent circuit.
- The calculations of the various powers, torques and motor efficiency from the induction motor equivalent circuit for a given operating condition.

References

No.	Slide No.	Image	Reference
1	5	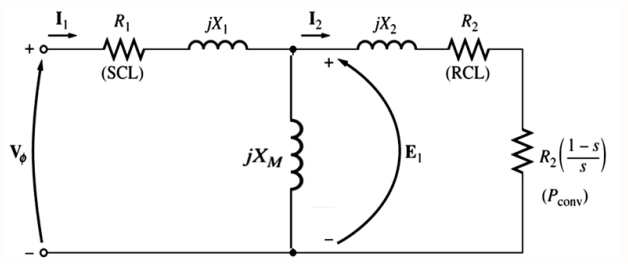	Adapted from *Electric Machinery Fundamentals, 5th ed.*, (p. 326), by S. J. Chapman, 2012, New York, NY: McGraw-Hill. Copyright 2012 by The McGraw-Hill Companies, Inc. Adapted with permission.

Lecture 4

EE3010: Electrical Devices and Machines

School of Electrical and Electronic Engineering

Associate Professor Lee Peng Hin
Tel: +65 6790 4474 | Email: ephlee@ntu.edu.sg

Learning Objectives

By the end of this lecture, you should be able to:

- Describe the different extended operating regions of a typical torque-speed characteristic curves of an induction motor.
- Calculate the maximum or pullout torque and the speed at this torque of an induction motor, using the Thevenin equivalent circuit approach.
- Analyse the performance of an induction motor with varying rotor resistance and how it affects the torque-speed characteristics.

Induction Motor Torque-speed Characteristics

- It is possible to use the equivalent circuit of an induction motor and the power flow diagram for the motor to derive a general expression for induced torque (developed torque) as a function of speed.

$$T_{ind} = \frac{P_{AG}}{\omega_{sync}}$$

$$P_{AG} = 3I_2^2\left(\frac{R_2}{s}\right)$$

$$\Rightarrow T_{ind} = \left(\frac{1}{\omega_{sync}}\right)3I_2^2\left(\frac{R_2}{s}\right)$$

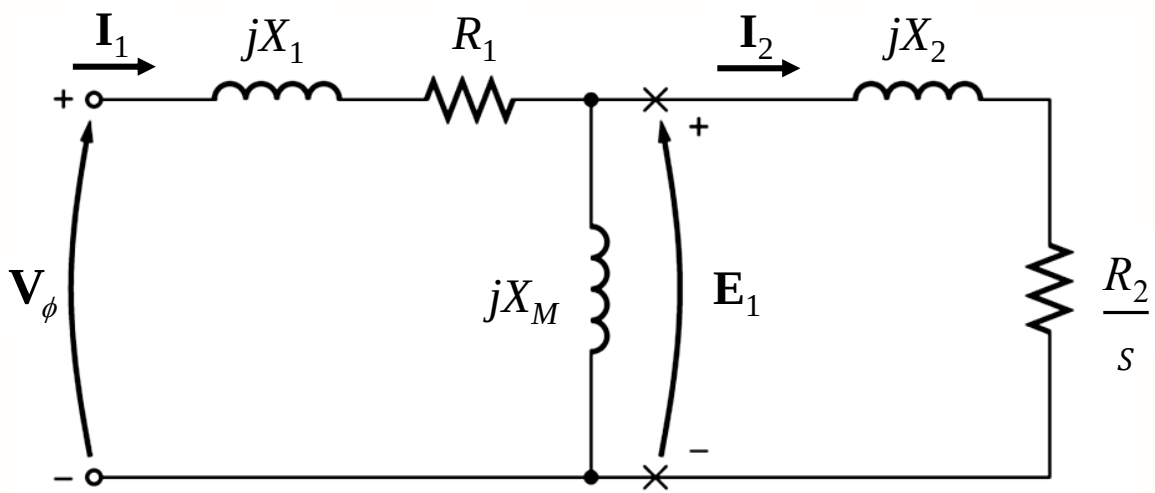

The per phase equivalent circuit of an induction motor.

Induction Motor Torque-speed Characteristics

- We want to find an expression for the current $\mathbf{I}_2$.
- One approach is to find the Thevenin equivalent to the left of the points marked "x" in the figure.

$$\mathbf{V}_{TH} = \frac{jX_M}{R_1 + jX_1 + jX_M}\mathbf{V}_\phi$$

$$\left|\mathbf{V}_{TH}\right| = V_{TH}$$

$$V_{TH} = \frac{X_M}{\sqrt{R_1^2 + (X_1 + X_M)^2}}V_\phi$$

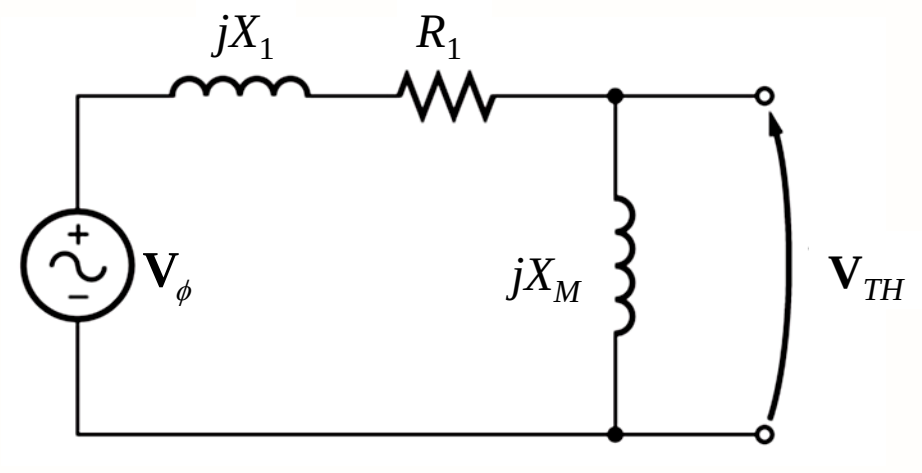

Induction Motor Torque-speed Characteristics

$$\mathbf{Z}_{TH} = \frac{jX_M(R_1 + jX_1)}{R_1 + jX_1 + jX_M}$$
$$= R_{TH} + jX_{TH}$$

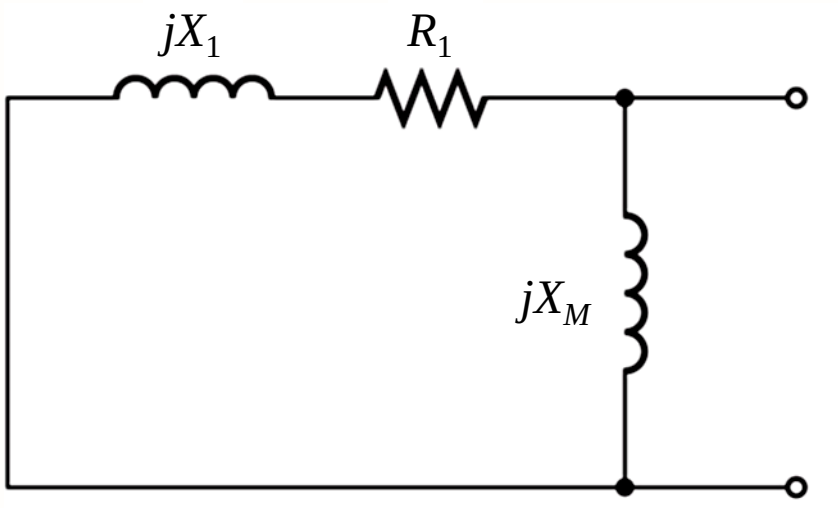

Induction Motor Torque-speed Characteristics

$$\mathbf{I}_2 = \frac{\mathbf{V}_{TH}}{\mathbf{Z}_{TH} + (R_2/s) + jX_2} = \frac{\mathbf{V}_{TH}}{(R_{TH} + R_2/s) + j(X_{TH} + X_2)}$$

$$|\mathbf{I}_2| = I_2 = \frac{V_{TH}}{\sqrt{(R_{TH} + R_2/s)^2 + (X_{TH} + X_2)^2}}$$

$$T_{ind} = \left(\frac{1}{\omega_{sync}}\right) 3 I_2^2 \left(\frac{R_2}{s}\right) = \left(\frac{1}{\omega_{sync}}\right) 3 \left(\frac{R_2}{s}\right) \frac{V_{TH}^2}{(R_{TH} + R_2/s)^2 + (X_{TH} + X_2)^2}$$

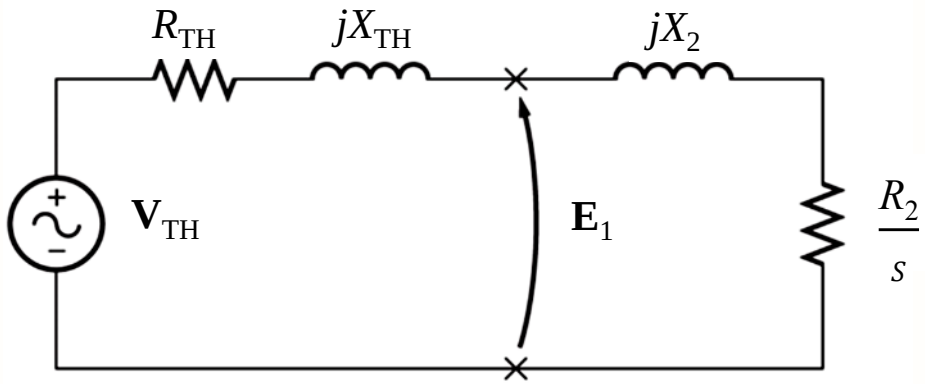

The resultant simplified equivalent circuit of an induction motor.

Induction Motor Torque-speed Characteristics Curve

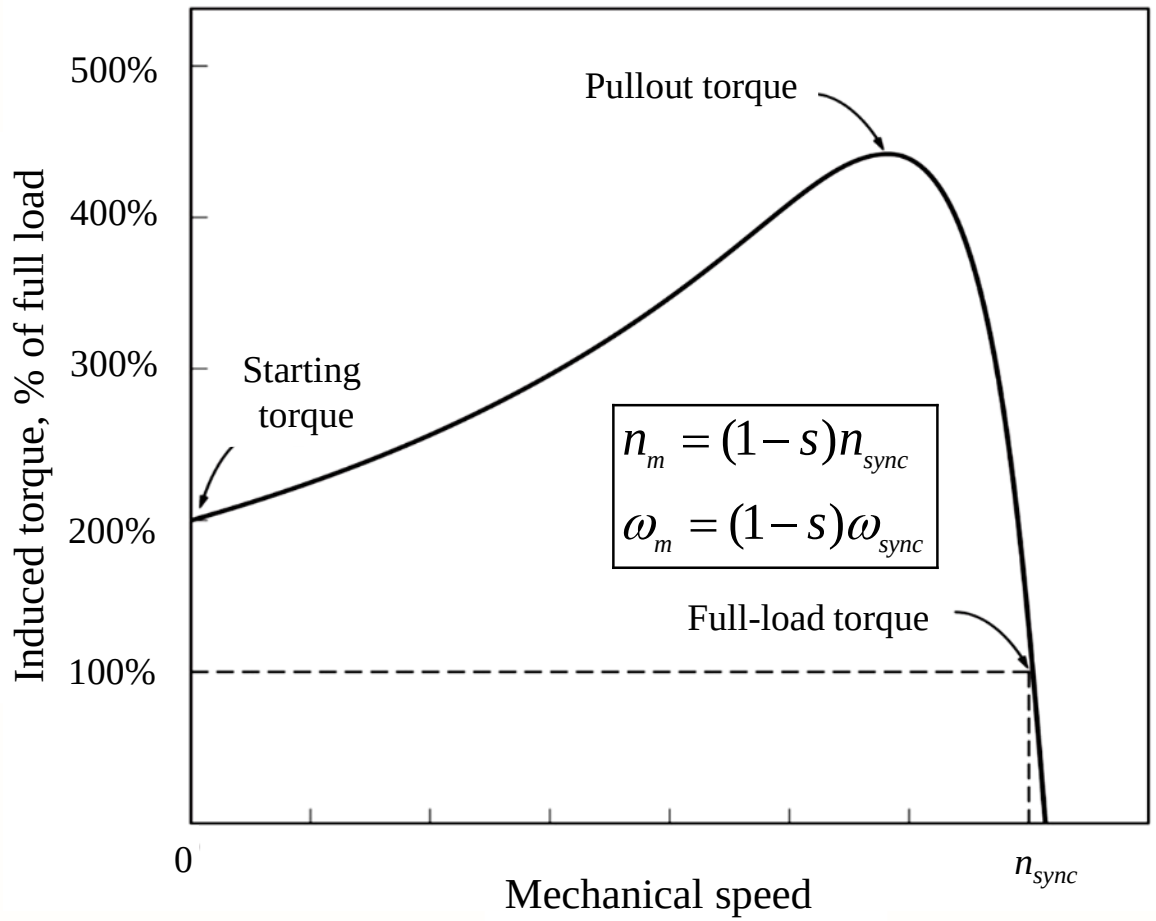

A typical induction motor torque-speed characteristics curve.

Induction Motor Torque-speed Characteristics Curve

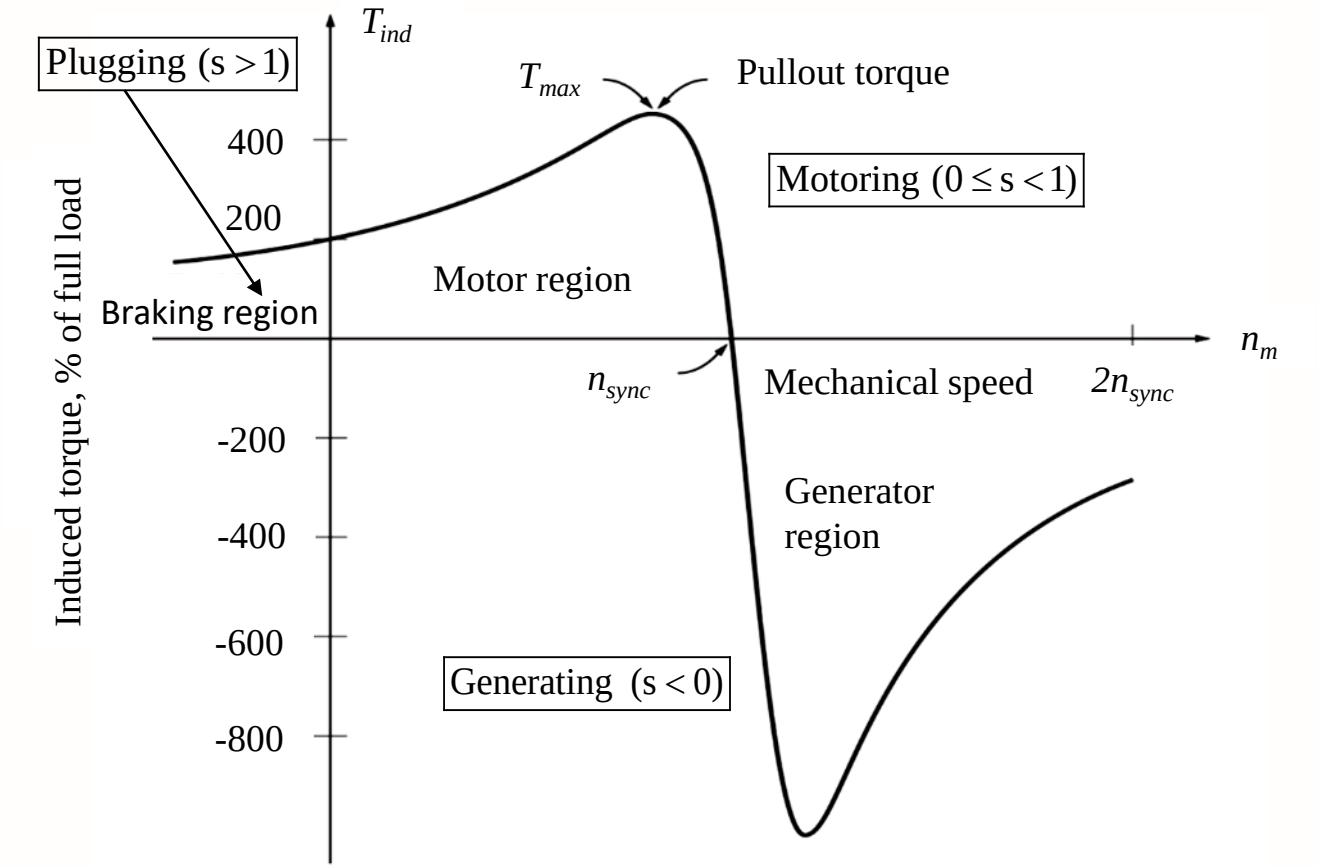

Induction motor torque-speed characteristics curve showing the extended operating regions (braking and generator regions).

Induction Motor Torque-speed Characteristics Curve

- Motoring region
  - The motor rotates in same direction but slower than the rotating magnetic field.
  - The induced torque is zero at synchronous speed.
  - The starting torque is slightly higher than the full-load torque.
  - There is a maximum possible developed torque, called the pullout torque.

Induction Motor Torque-speed Characteristics Curve

- Generating region
  - If the rotor of the induction motor is driven faster than synchronous speed by an external prime mover, the direction of the induced torque reverses and the machine becomes a generator.
  - Induction generators in wind turbines are operated in this manner. As the torque applied to its shaft increases, the amount of power produced by the induction generator increases.

Induction Motor Torque-speed Characteristics Curve

- Plugging region
  - If the motor is turning backwards relative to the direction of the magnetic fields, the induced torque in the machine will stop the machine very rapidly and will try to rotate it in the other direction.
  - This is done by reversing the phase sequence of the 3-phase stator voltage supply, simply by switching any two stator phases.
  - The act of switching two phases in order to stop the motor very rapidly is called plugging.

Maximum (Pullout) Torque in Induction Motor

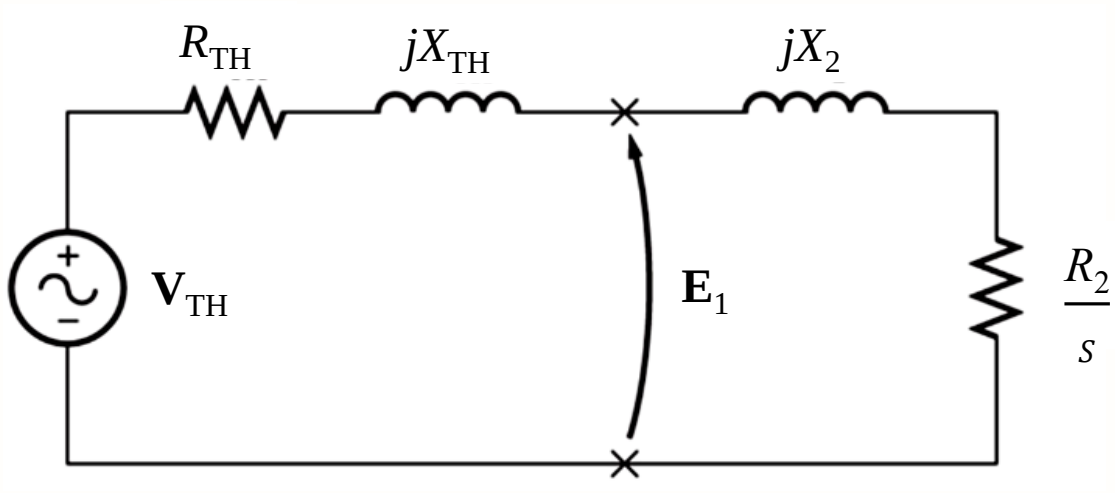

- Maximum possible torque occurs when air-gap power is maximum.

- From $T_{ind} = \dfrac{P_{AG}}{\omega_{sync}}$ and since $P_{AG} = 3I_2^2\left(\dfrac{R_2}{s}\right)$, then max T_{ind} occurs when the power consumed by $\dfrac{R_2}{s}$ is a maximum.

Maximum (Pullout) Torque in Induction Motor

- From the maximum power transfer theorem, $\frac{R_2}{s} = \left| R_{TH} + jX_{TH} + jX_2 \right|$

- The slip at pullout torque, $\Rightarrow s_{\max} = \frac{R_2}{\sqrt{R_{TH}^2 + (X_{TH} + X_2)^2}}$

- Maximum or pullout torque

$$T_{\max} = \left(\frac{1}{\omega_{sync}} \right) \left(\frac{R_2}{s_{\max}} \right) \frac{3V_{TH}^2}{\left(R_{TH} + R_2 / s_{\max} \right)^2 + \left(X_{TH} + X_2 \right)^2}$$

$$= \frac{3V_{TH}^2}{2\omega_{sync} \left[R_{TH} + \sqrt{R_{TH}^2 + (X_{TH} + X_2)^2} \right]}$$

Maximum (Pullout) Torque in Induction Motor

- The slip at maximum torque can be varied by changing the rotor resistance, while the maximum torque is independent of the rotor resistance.
- The max torque is proportional to the square of the supply voltage and inversely related to the size of the stator impedance and the rotor reactance.
- The torque-speed characteristics of a wound-rotor induction motor is as shown. For this type of motor, external resistance can be inserted to the rotor because the rotor circuit is brought out through slip rings.
- As rotor resistance increases, the pullout speed decreases, but the max torque remains constant.

Maximum (Pullout) Torque in Induction Motor

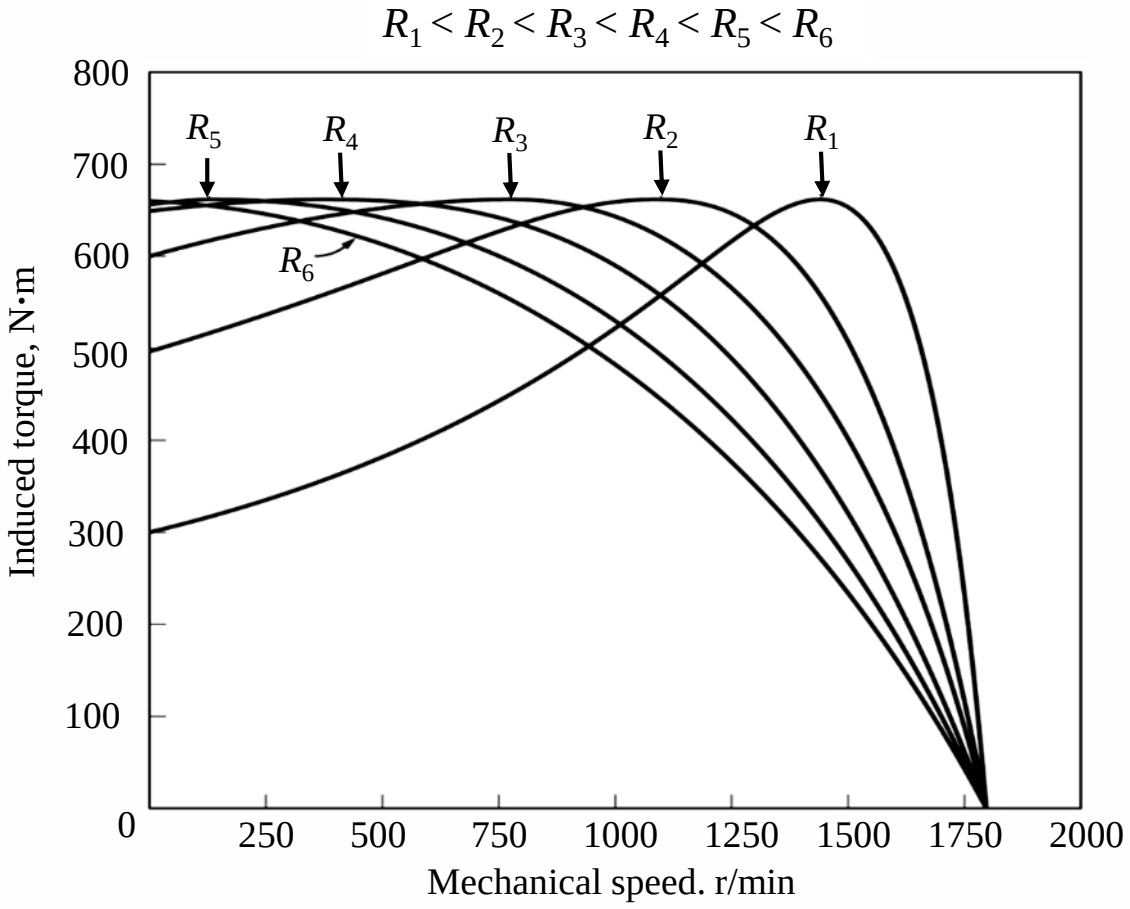

Effect of varying rotor resistance on torque-speed characteristics of a wound-rotor induction motor.

Example 1

A 460 V, 60 Hz, 25-hp, four-pole induction motor is wye-connected. The impedances per phase referred to the stator circuit are:

$$R_1 = 0.641\Omega, \qquad R_2 = 0.332\Omega, \qquad X_1 = 1.106\Omega,$$

$$X_2 = 0.464\Omega, \qquad X_M = 26.3\Omega$$

a) What is the maximum torque of this motor?
At what speed and slip does it occur?

b) What is the starting torque of this motor?

c) When the rotor resistance is doubled, what is the speed at which the maximum torque now occurs?
What is the new starting torque of the motor?

(Solutions →)

Example 1 – Solutions

$$\mathbf{V}_{TH} = \frac{jX_M}{R_1 + jX_1 + jX_M}\mathbf{V}_\phi = 254.8\angle 1.34°\text{V}$$

$$\mathbf{Z}_{TH} = \frac{jX_M(R_1 + jX_1)}{R_1 + jX_1 + jX_M} = 0.59 + j1.08\Omega$$

$$= R_{TH} + jX_{TH}$$

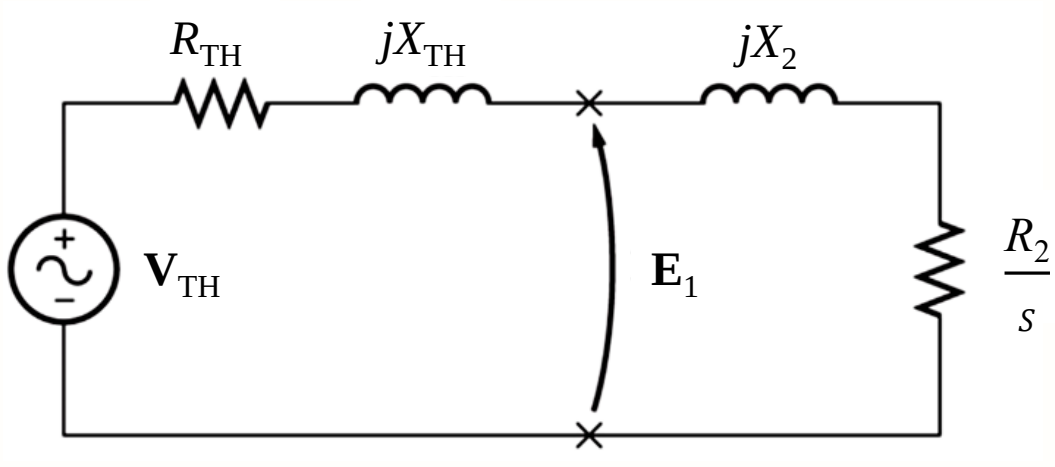

Example 1 – Solutions

a) Slip at maximum torque,

$$s_{\max} = \frac{R_2}{\sqrt{R_{TH}^2 + (X_{TH} + X_2)^2}} = 0.2 \Rightarrow n_{sync} = \frac{120 f_s}{p} = \frac{120(60)}{4} = 1800 \text{ r/min}$$

$$\Rightarrow n_m = (1 - s_{\max})\, n_{sync} = 1440 \text{ r/min}$$

$$\mathrm{I}_2 = \frac{\mathbf{V}_{TH}}{\left(R_{TH} + R_2 / s_{\max}\right) + j(X_{TH} + X_2)} = 93.37\angle -33.12^\circ \text{ A}$$

$$P_{AG} = 3I_2^2 \left(\frac{R_2}{s_{\max}} \right) = 43415 \text{ W} \Rightarrow T_{\max} = \frac{P_{AG}}{\omega_{sync}} = 230.3 \text{ N.m}$$

Example 1 – Solutions

b) Starting torque, $s = 1$

$$\mathbf{I}_2 = \frac{\mathbf{V}_{TH}}{\left(R_{TH} + R_2 / s\right) + j(X_{TH} + X_2)} = 141.69\angle -57.82^\circ \text{ A}$$

$$P_{AG} = 3I_2^2\left(\frac{R_2}{s}\right) = 19995.75 \text{ W} \Rightarrow T_{start} = \frac{P_{AG}}{\omega_{sync}} = 106 \text{ N.m}$$

Example 1 – Solutions

c) If the rotor resistance is doubled, the slip at maximum torque is doubled too.

$$s_{\max} = 0.4 \Rightarrow n_m = (1 - s_{\max})\, n_{sync} = 1080 \text{ r/min}$$

$$\text{But } T_{\max} = 230.3 \text{ N.m. Same.}$$

Similarly as in (b), the starting torque can be calculated as 170 N.m.

Summary

In this lecture, you have learnt:

- The analysis of an induction motor using the Thevenin equivalent circuit.
- A typical induction motor torque-speed characteristics curve and its extended operating regions.
- The computations of the maximum torque developed and the speed of the motor at this torque.
- The slip or speed at which maximum torque occurs can be controlled by varying the rotor resistances and the value of the maximum torque is independent of the rotor resistance.

References

No.	Slide No.	Image	Reference
1	3	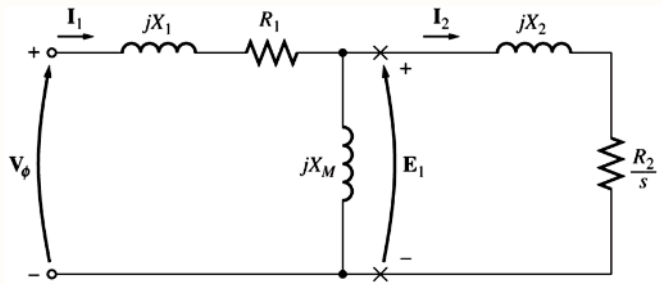	Reprinted from *Electric Machinery Fundamentals, 5th ed.*, (p. 333), by S. J. Chapman, 2012, New York, NY: McGraw-Hill. Copyright 2012 by The McGraw-Hill Companies, Inc. Reprinted with permission.
2	4	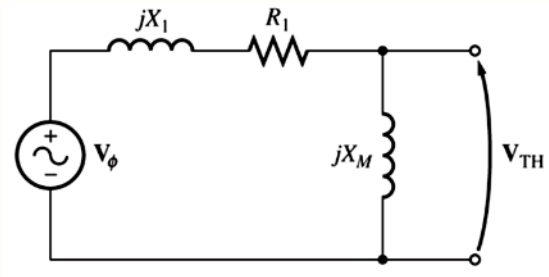	Reprinted from *Electric Machinery Fundamentals, 5th ed.*, (p. 334), by S. J. Chapman, 2012, New York, NY: McGraw-Hill. Copyright 2012 by The McGraw-Hill Companies, Inc. Reprinted with permission.
3	5	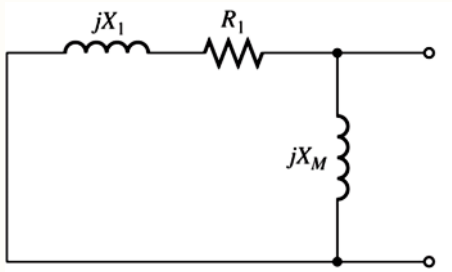	Reprinted from *Electric Machinery Fundamentals, 5th ed.*, (p. 334), by S. J. Chapman, 2012, New York, NY: McGraw-Hill. Copyright 2012 by The McGraw-Hill Companies, Inc. Reprinted with permission.

References

No.	Slide No.	Image	Reference
4	6, 12 and 17	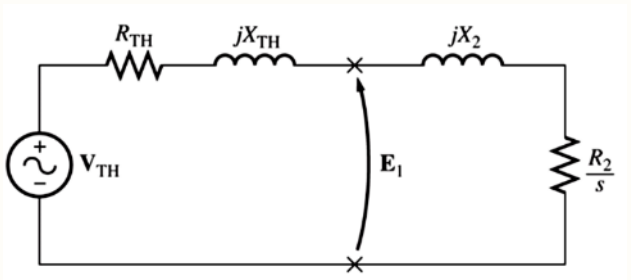	Reprinted from *Electric Machinery Fundamentals, 5th ed.*, (p. 334), by S. J. Chapman, 2012, New York, NY: McGraw-Hill. Copyright 2012 by The McGraw-Hill Companies, Inc. Reprinted with permission.
5	7	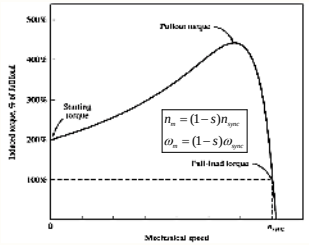	Adapted from *Electric Machinery Fundamentals, 5th ed.*, (p. 336), by S. J. Chapman, 2012, New York, NY: McGraw-Hill. Copyright 2012 by The McGraw-Hill Companies, Inc. Adapted with permission.
6	8	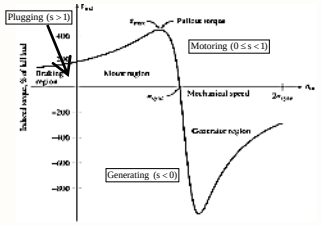	Adapted from *Electric Machinery Fundamentals, 5th ed.*, (p. 337), by S. J. Chapman, 2012, New York, NY: McGraw-Hill. Copyright 2012 by The McGraw-Hill Companies, Inc. Adapted with permission.

References

No.	Slide No.	Image	Reference
7	15	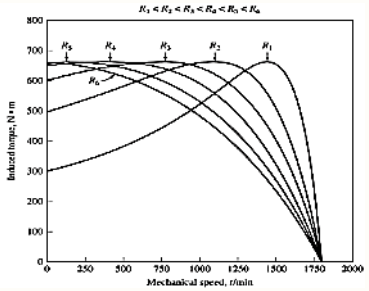	Reprinted from *Electric Machinery Fundamentals, 5th ed.*, (p. 340), by S. J. Chapman, 2012, New York, NY: McGraw-Hill. Copyright 2012 by The McGraw-Hill Companies, Inc. Reprinted with permission.

Lecture 5

EE3010: Electrical Devices and Machines

School of Electrical and Electronic Engineering

Associate Professor Lee Peng Hin
Tel: +65 6790 4474 | Email: ephlee@ntu.edu.sg

Learning Objectives

By the end of this lecture, you should be able to:

- Describe how the speed of an induction motor can be controlled.
- Explain the various tests to be carried out to measure the induction motor circuit model parameters.
- Explain the techniques that may be used for induction motor starting.

Speed Control of Induction Motors

- Two approaches:

  a) Vary the slip of the motor by:

     - Varying the rotor resistance
     - Varying the terminal voltage of the motor

  b) Vary the synchronous speed by:

     - Changing the number of poles
     - Changing the electrical frequency

Vary the Slip of Motor

- Varying the rotor resistance
  - In wound-rotor types, the shape of the torque speed characteristics can be changed by inserting extra resistances in the rotor circuit. But this method is inefficient as the extra rotor resistances seriously reduce the efficiency of the machine.
- Varying the terminal voltage of the motor
  - The torque is proportional to the square of the applied voltage, hence the speed can be controlled.

Vary Synchronous Speed

$$n_{sync} = \frac{120 f_s}{p}$$

- Changing the number of poles
  - Changing the number of poles requires multiple stator windings, which increases the complexity and overall cost of the induction machine.
- Changing the electrical frequency (commonly used)
  - When running at speeds below the base speed, the stator voltage should be decreased linearly with decreasing stator frequency. This is known as derating. Else, the steel in the motor core will saturate and excessive magnetisation currents will flow.

Vary Synchronous Speed

- This is explained as follows:

  If $(R_1 + jX_1)$ drop can be neglected, then

  $$V_\phi \approx E_1 = 4.44 N_1 \phi_{\max} f_s \Rightarrow \phi_{\max} = \frac{V_\phi}{4.44 N_1 f_s}$$

  If V_ϕ remains constant while $f_s \downarrow$, this $\Rightarrow \phi_{\max} \uparrow$

  which requires large increase in magnetisation current.

- Thus, it is customary to decrease the applied stator voltage in direct proportion to the decrease in frequency below rated frequency, to avoid excessive magnetisation currents. The method is also called *Variable Voltage Variable Frequency* control – using solid-state, power electronics, etc.

Variable-frequency Speed Control of Induction Motors

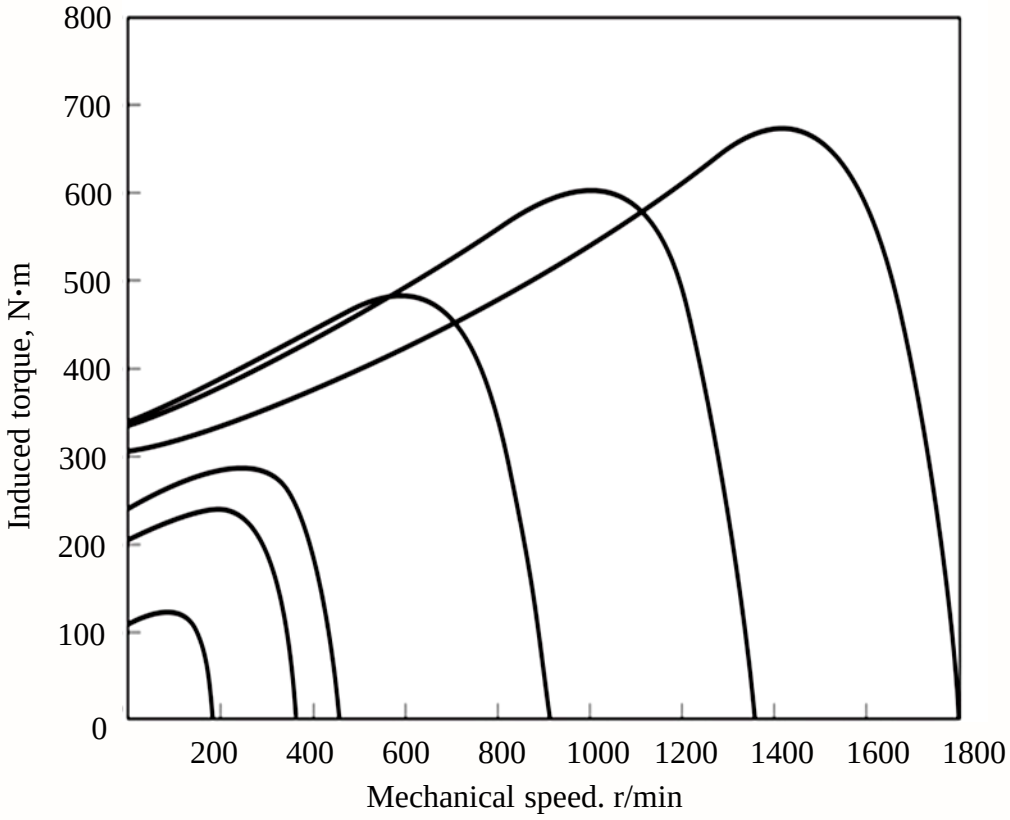

T-S characteristics for speeds below the base speed, assuming the stator voltage is derated linearly with frequency.

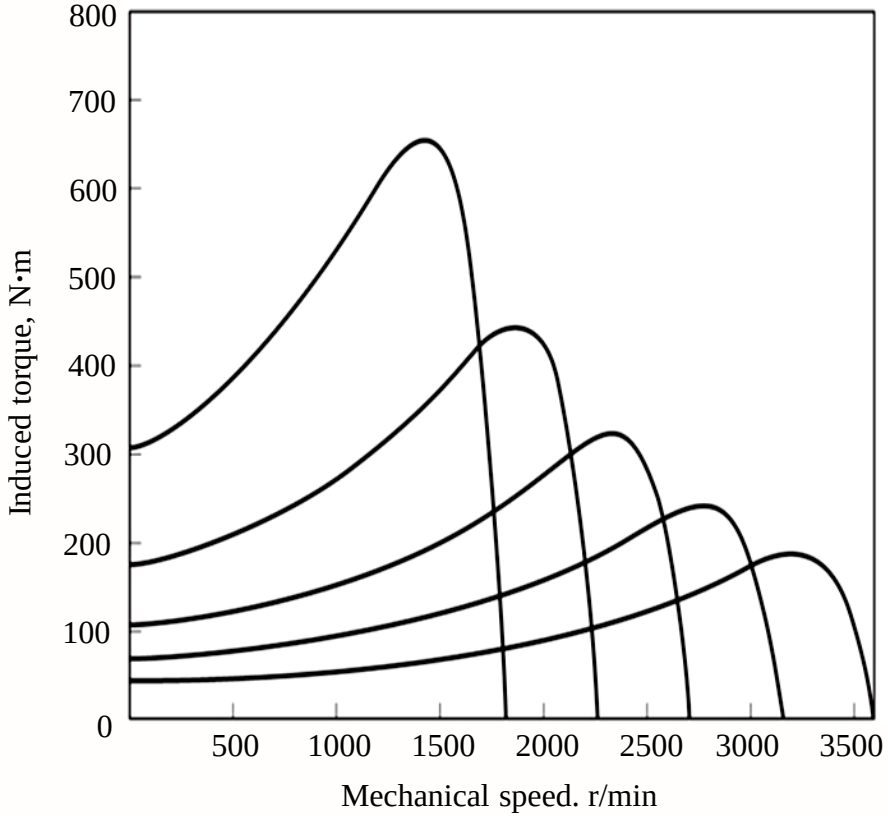

T-S characteristics for speeds above the base speed, assuming the stator voltage is held constant.

Determining Circuit Model Parameters of Induction Motors

- How can R_1, R_2, X_1, X_2 and X_M be determined for a real motor?
- <u>No load test</u>: To determine the magnetising reactance and the combined core, friction and windage losses.

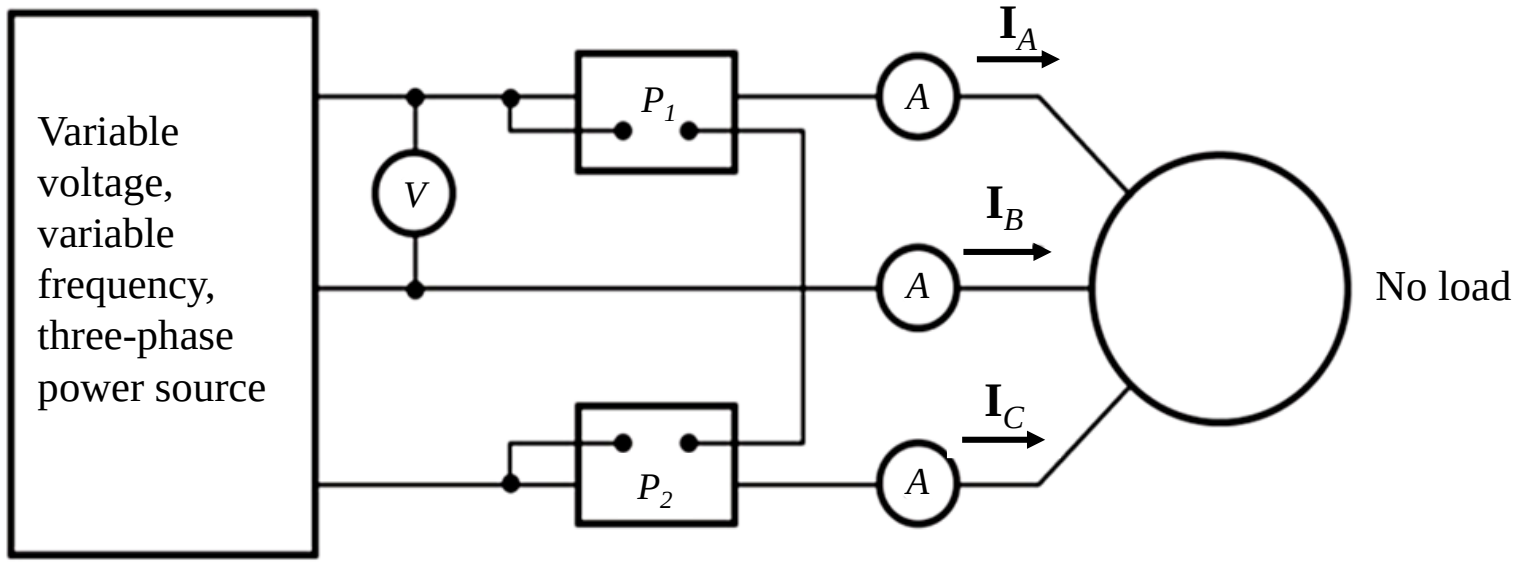

No-load test circuit.

Determining Circuit Model Parameters of Induction Motors

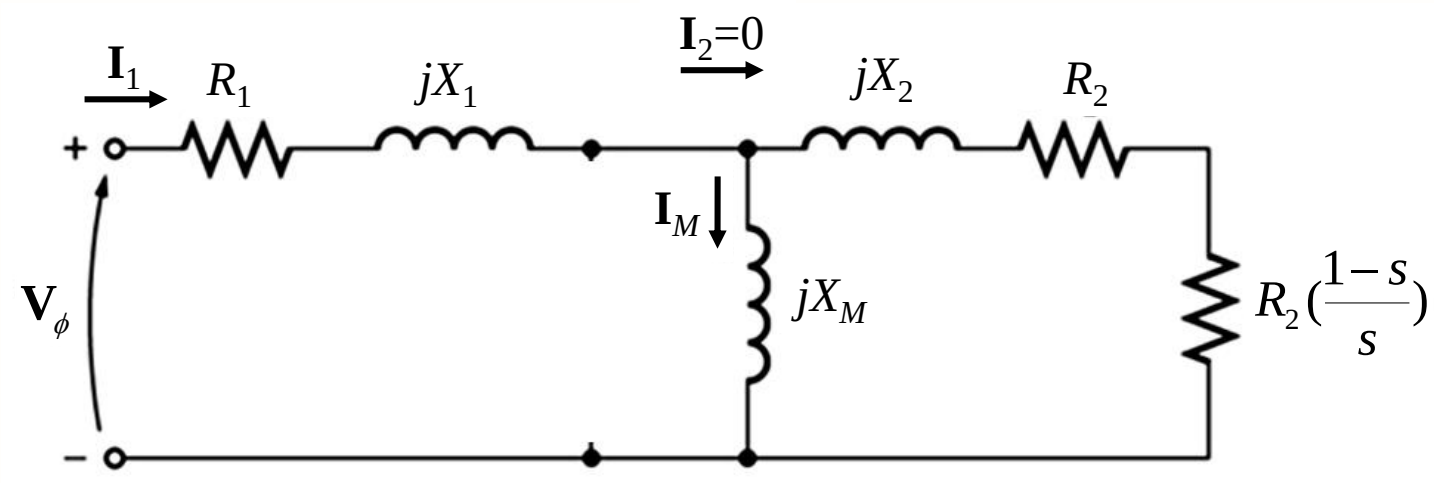

- At no load, motor speed ≈ synchronous speed. Hence $s \approx 0$ and $\frac{R_2}{s}$ will be very high.
- The reactance of the parallel combination of X_M and the rotor circuit will, therefore, be very nearly equal to X_M and the overall input power factor will be very small.
- Most of the voltage drop will be across the inductive components in the circuit.

Determining Circuit Model Parameters of Induction Motors

- The equivalent input impedance at no load is thus approximately

$$\frac{V_\phi}{I_1} \simeq X_1 + X_M$$

$\Rightarrow X_M$ can be obtained, as X_1 can be found from the blocked-rotor test.

- At no load, P_{in} measured must equal to the losses in the motor.
  The rotor copper losses are negligible as the rotor current is almost zero.

- The stator copper losses $P_{SCL} = 3I_1^2 R_1$, where R_1 is obtained from the DC test.
  Hence, the rotational losses of the machine can be obtained.

$$P_{rot} = P_{in} - P_{SCL}$$

DC Test for Stator Resistance

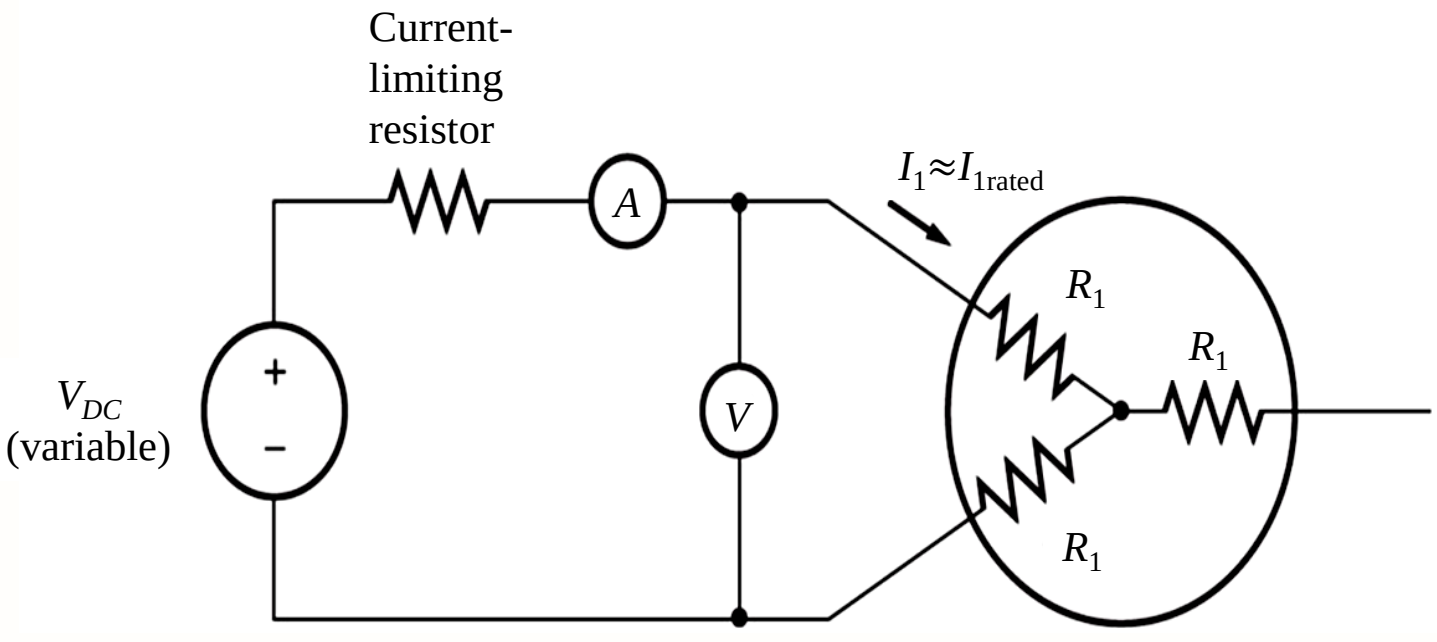

$$R_1 = \frac{V_{DC}}{2I_{DC}}$$

DC resistance test circuit.

- Because the current is dc, there is no induced voltage in the rotor circuit and no resulting current flow. Also, the reactances are zero at dc.

Locked-rotor or Blocked-rotor Test

- The rotor is locked or blocked. An AC voltage is applied to the stator, and the current flow is adjusted to be approximately full-load value.
- For finding R_2, X_1 and X_2.

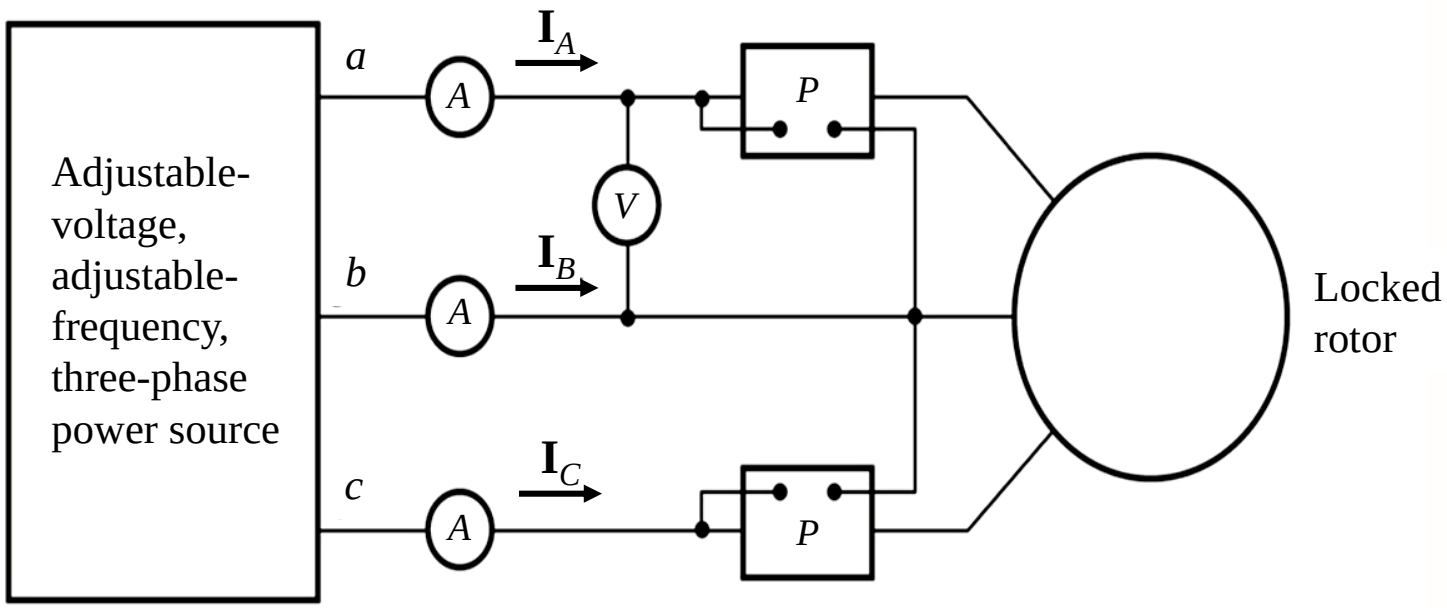

Locked-rotor test circuit.

Locked-rotor or Blocked-rotor Test

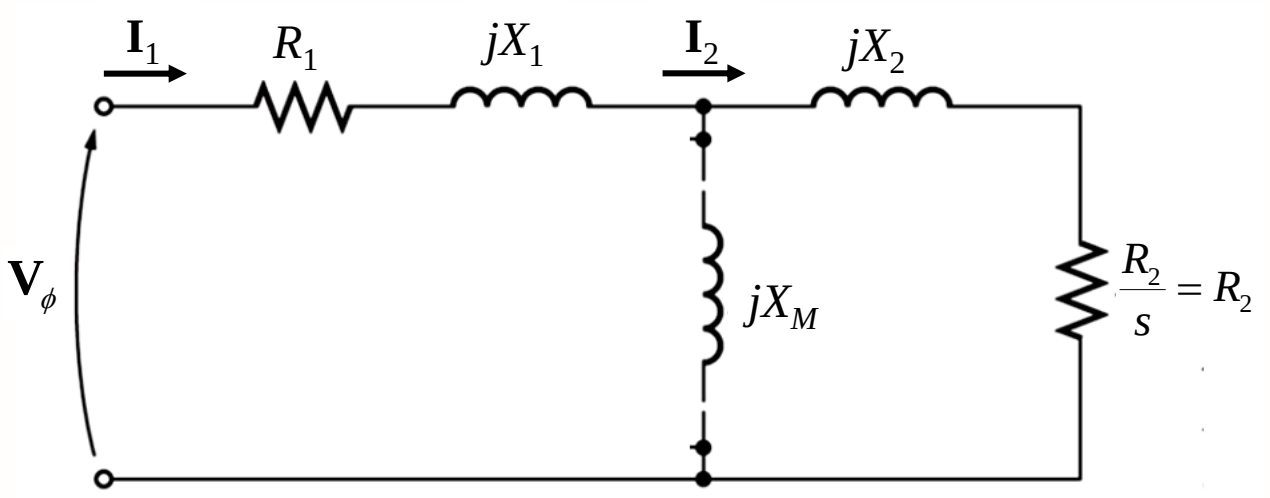

Motor equivalent circuit under locked-rotor test.

- Since rotor is not moving, $s = 1$. Since R_2 and X_2 are small, almost all the input current will flow through them, instead of through the much larger magnetising reactance X_M.
- Under these conditions, the circuit looks like a series combination of R_1, X_1, R_2 and X_2.

Locked-rotor or Blocked-rotor Test

- The input power to the motor $P = 3I_1^2(R_1 + R_2)$

  $\Rightarrow R_2$ can be obtained since R_1 found from DC test.

- $Z_{LR} = \dfrac{V_\phi}{I_1} = \sqrt{(R_1 + R_2)^2 + (X_1 + X_2)^2}$

  $\Rightarrow (X_1 + X_2)$ can be obtained.

- It is not uncommon to have equal division between X_1 and X_2. Thus,

  $\Rightarrow X_1 = X_2 = \dfrac{(X_1 + X_2)}{2}$ can be obtained.

Example 1

The following test data were taken on a 7.5-hp, four-pole, 208 V, 60-Hz, wye-connected induction motor having a rated current of 28 A.

DC test: $V_{DC} = 13.6\ \text{V},\ I_{DC} = 28.0\ \text{A}$

No-load test: $V_{line} = 208\ \text{V},\ f = 60\ \text{Hz},\ I_{line} = 8.17\ \text{A},\ P_{in} = 420\ \text{W}$

Locked-rotor test: $V_{line} = 25\ \text{V},\ f = 15\ \text{Hz},\ I_{line} = 27.9\ \text{A},\ P_{in} = 920\ \text{W}$

a) Sketch the per-phase equivalent circuit for this motor.

b) Find the slip at the pullout torque and find the value of the pullout torque.

(Solutions →)

Example 1 – Solutions

a) i. DC test: $V_{DC} = 13.6\text{ V}, I_{DC} = 28.0\text{ A}$

$$\Rightarrow 2R_1 = \frac{V_{DC}}{I_{DC}} \Rightarrow R_1 = 0.243\Omega$$

ii. Locked-rotor test: $V_{line} = 25\text{ V},\ f = 15\text{ Hz},$

$$I_{line} = 27.9\text{ A}, P_{in} = 920\text{ W}$$

$$\Rightarrow 920 = 3(I_1^2)(R_1 + R_2) \Rightarrow R_2 = 0.151\Omega$$

and $Z_\varphi = \dfrac{25}{\sqrt{3}} = \left(\dfrac{1}{27.9}\right) = \sqrt{(R_1 + R_2)^2 + (X_1 + X_2)^2}$

$\Rightarrow X_1 = X_2 = 0.168\Omega$ at a test frequency of 15 Hz.

Hence, $X_1 = X_2 = 0.168\left(\dfrac{60}{15}\right)\ \Omega = 0.672\ \Omega$ at 60 Hz.

Example 1 – Solutions

iii. No-load test: $V_{line} = 208\text{ V},\ f = 60\text{ Hz},\ I_{line} = 8.17\text{ A},\ P_{in} = 420\text{ W}$

$$\Rightarrow \frac{208}{\sqrt{3}}\left(\frac{1}{8.17}\right) \simeq X_1 + X_M \Rightarrow X_M = 14.03\Omega$$

$$P_{SCL} = 3I_1^2 R_1 = 48.7\text{ W} \Rightarrow P_{rot} = 420 - P_{SCL} = 371.3\text{ W}$$

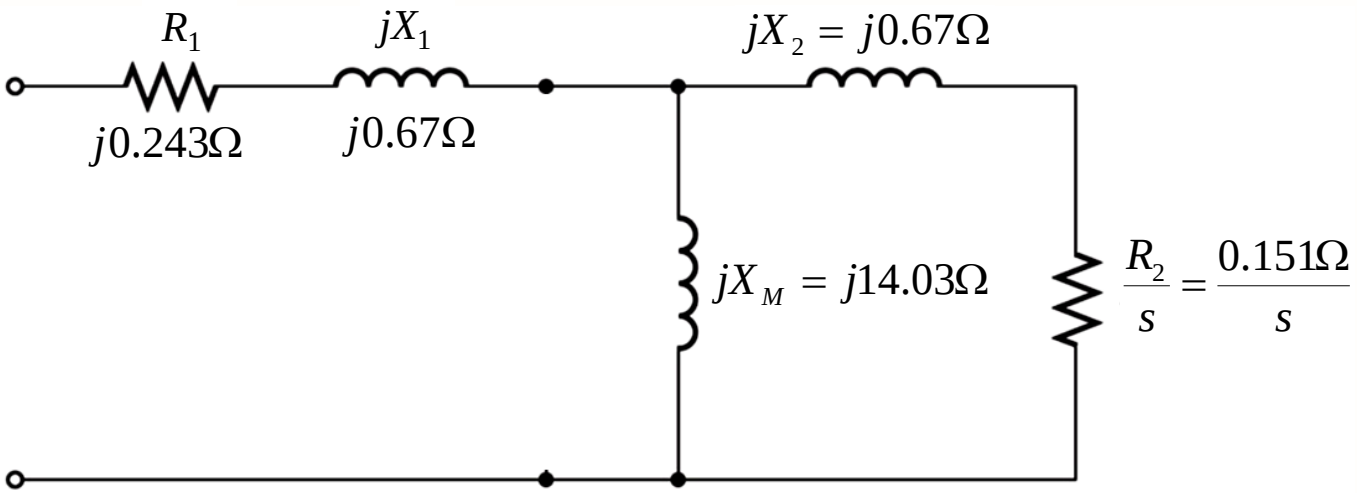

Motor per phase equivalent circuit.

Example 1 – Solutions

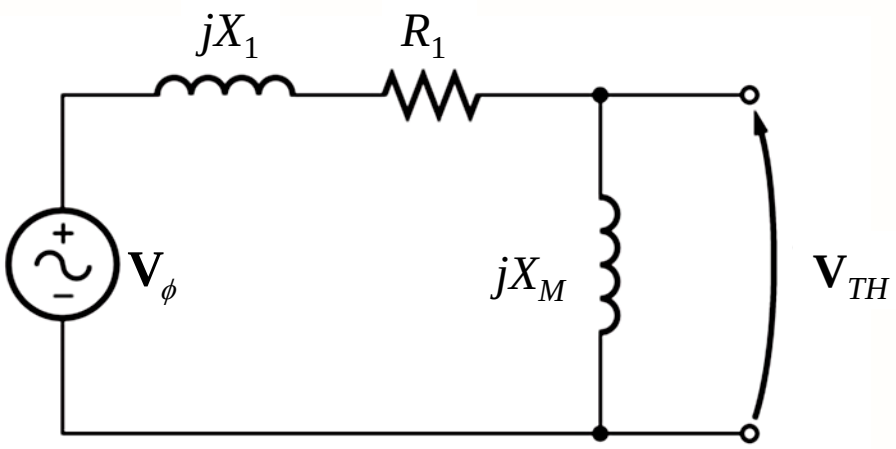

$$\mathbf{V}_{TH} = \frac{jX_M}{R_1 + jX_1 + jX_M}\mathbf{V}_\varphi$$
$$= 114.58\angle 0.95°$$

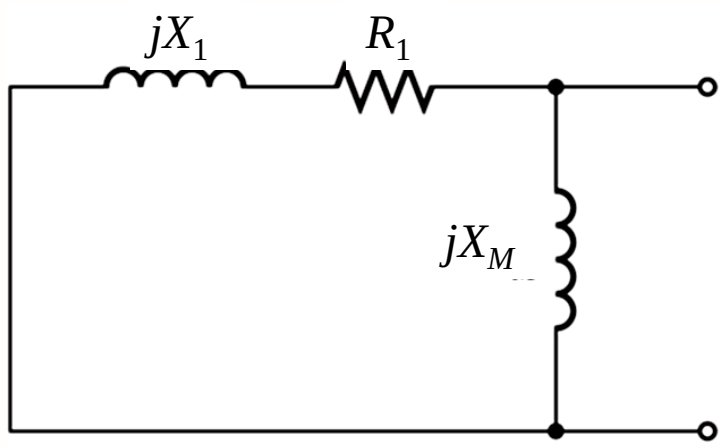

$$\mathbf{Z}_{TH} = \frac{jX_M(R_1 + jX_1)}{R_1 + jX_1 + jX_M}$$
$$= 0.2212 + j0.6449$$
$$= 0.682\angle 71.06°\Omega$$

Example 1 – Solutions

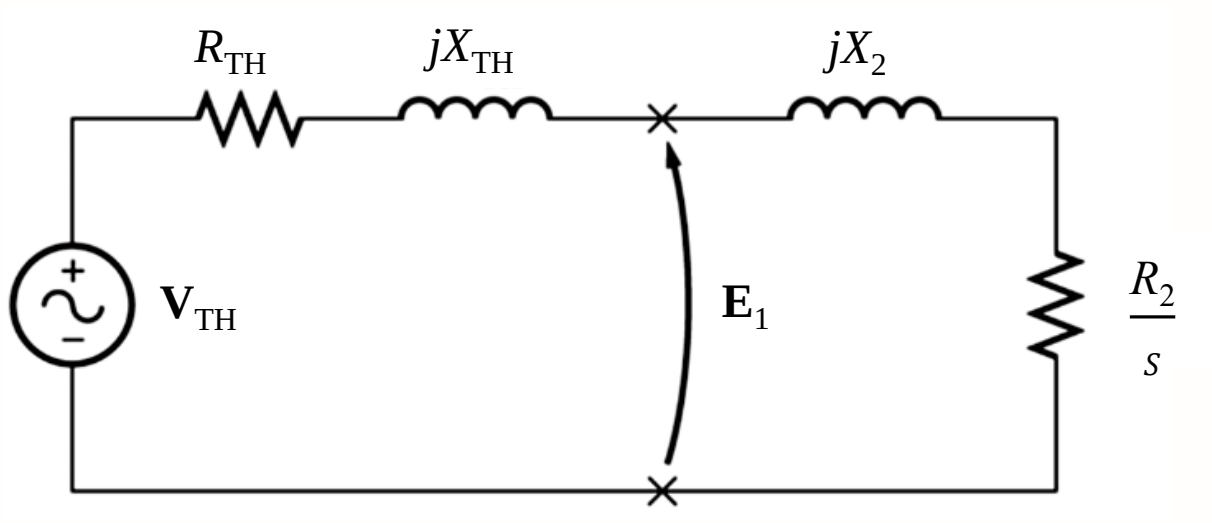

Max power transfer to $\frac{R_2}{s}$ when

$$\frac{R_2}{s_{\max}} = \left|\mathbf{Z}_{TH} + jX_2\right| \Rightarrow s_{\max} = 0.1131$$

Example 1 – Solutions

$$\left(\text{Recall that } T_{ind} = \frac{P_{AG}}{\omega_{sync}} \text{ and since } P_{AG} = 3I_2^2\left(\frac{R_2}{s}\right), \text{ then max } T_{ind} \text{ occurs when the power consumed by } \frac{R_2}{s} \text{ is a maximum.}\right)$$

$$\text{At } s_{\max}, \mathbf{I}_2 = 56.2\angle -39.29^\circ \text{ A}$$

$$\Rightarrow \max P_{AG} = 3(56.2)^2\left(\frac{0.151}{0.1131}\right) = 12650.5 \text{ W}$$

$$n_{sync} = \frac{120 f_s}{p} = 1800 \text{ r/min}$$

$$\Rightarrow T_{\max} = \frac{\max P_{AG}}{\omega_{sync}} = 67.11 \text{ N.m}$$

Starting of Induction Motors

- In many cases, induction motors can be started by connecting them to power supply directly. But the resulting starting current may cause a dip in power supply voltage, and hence, result in undesirable effects such as dimming of lamps, etc.

- If necessary, the starting current of an induction motor may be reduced by a starting circuit.

- One way is to change a normally delta connected motor to a star-connected motor during starting of induction motor. Phase voltage and hence starting current is reduced. When at full speed, reconnect back in a delta configuration.

Starting of Induction Motors

- Another way to reduce starting current is to insert extra inductors or resistors into the power line during starting. This approach is rare today.
- Some may reduce the motor's terminal voltage during starting by using autotransformers to step it down, and once full speed is reached, full line voltage is applied back.
- For wound-rotor induction motor, starting can be achieved at relatively low currents by inserting extra resistance in the rotor circuit during starting. The extra resistance not only increases starting torque, but also reduces the starting current.

Summary of Induction Motors

- The induction motor is the most popular type of ac motor. Basically it is a rotating transformer.
- Two types of induction motors:
  - Squirrel-cage rotors
  - Wound rotors
- An induction motor operates near synchronous speed, but it can never operate exactly at synchronous speed.
- The equivalent circuit of an induction motor is very similar to the equivalent circuit of a transformer.

Summary of Induction Motors

- The slip or speed at which the maximum torque occurs can be controlled by varying the rotor resistance.
- The value of the maximum torque is independent of the varying rotor resistance.
- Speed control of induction motors can be accomplished by changing the number of poles, the applied electrical frequency, the applied terminal voltage, or the rotor resistance in the case of wound-rotor type.
- Motor tests can be conducted to determine the circuit parameters of an induction motor.
- Starting circuits may be used to reduce the starting current to a safe level.

References

No.	Slide No.	Image	Reference
1	7	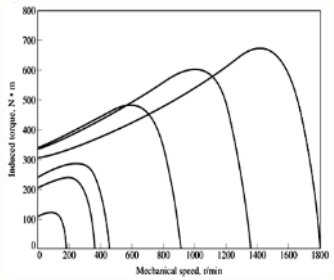	Reprinted from *Electric Machinery Fundamentals, 5th ed.*, (p. 368), by S.J. Chapman, 2012, New York, NY: McGraw-Hill. Copyright 2012 by The McGraw-Hill Companies, Inc. Reprinted with permission.
2	7	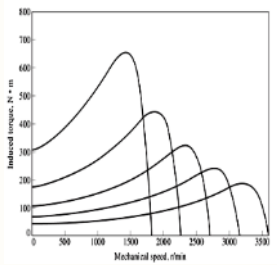	Reprinted from *Electric Machinery Fundamentals, 5th ed.*, (p. 368), by S.J. Chapman, 2012, New York, NY: McGraw-Hill. Copyright 2012 by The McGraw-Hill Companies, Inc. Reprinted with permission.
3	8	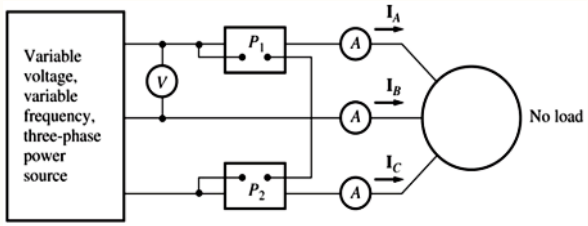	Reprinted from *Electric Machinery Fundamentals, 5th ed.*, (p. 381), by S.J. Chapman, 2012, New York, NY: McGraw-Hill. Copyright 2012 by The McGraw-Hill Companies, Inc. Reprinted with permission.

References

No.	Slide No.	Image	Reference
4	9	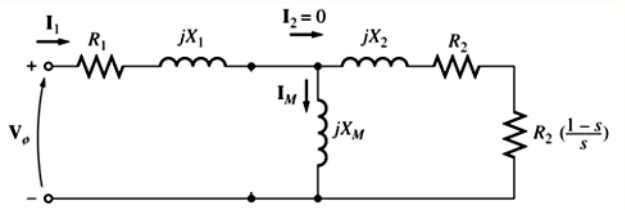	Adapted from *Electric Machinery Fundamentals, 5th ed.*, (p. 381), by S.J. Chapman, 2012, New York, NY: McGraw-Hill. Copyright 2012 by The McGraw-Hill Companies, Inc. Adapted with permission.
5	11	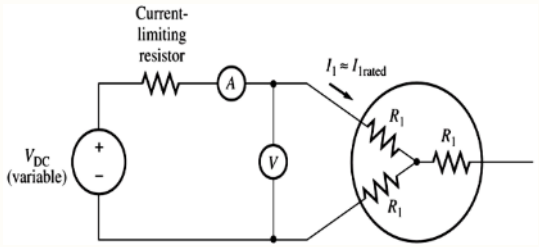	Reprinted from *Electric Machinery Fundamentals, 5th ed.*, (p. 382), by S.J. Chapman, 2012, New York, NY: McGraw-Hill. Copyright 2012 by The McGraw-Hill Companies, Inc. Reprinted with permission.
6	12	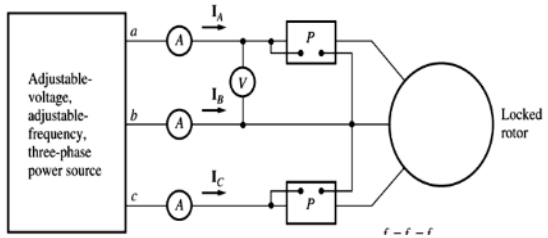	Reprinted from *Electric Machinery Fundamentals, 5th ed.*, (p. 384), by S.J. Chapman, 2012, New York, NY: McGraw-Hill. Copyright 2012 by The McGraw-Hill Companies, Inc. Reprinted with permission.

References

No.	Slide No.	Image	Reference
7	13	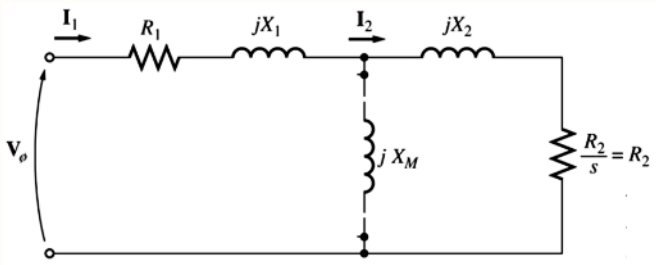	Adapted from *Electric Machinery Fundamentals, 5th ed.*, (p. 384), by S.J. Chapman, 2012, New York, NY: McGraw-Hill. Copyright 2012 by The McGraw-Hill Companies, Inc. Adapted with permission.
8	17	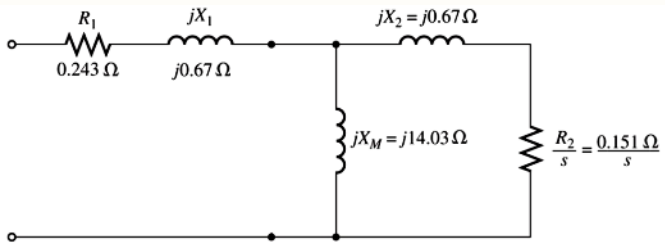	Reprinted from *Electric Machinery Fundamentals, 5th ed.*, (p. 387), by S.J. Chapman, 2012, New York, NY: McGraw-Hill. Copyright 2012 by The McGraw-Hill Companies, Inc. Reprinted with permission.
9	18	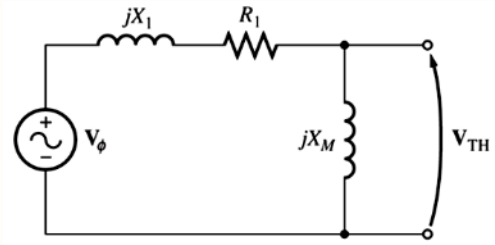	Reprinted from *Electric Machinery Fundamentals, 5th ed.*, (p. 334), by S.J. Chapman, 2012, New York, NY: McGraw-Hill. Copyright 2012 by The McGraw-Hill Companies, Inc. Reprinted with permission.

References

No.	Slide No.	Image	Reference
10	18	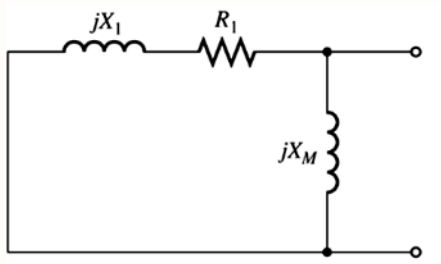	Reprinted from *Electric Machinery Fundamentals, 5th ed.*, (p. 334), by S.J. Chapman, 2012, New York, NY: McGraw-Hill. Copyright 2012 by The McGraw-Hill Companies, Inc. Reprinted with permission.
11	19	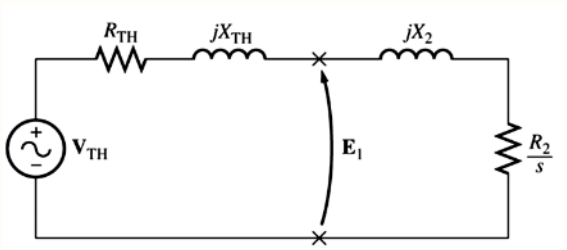	Reprinted from *Electric Machinery Fundamentals, 5th ed.*, (p. 334), by S.J. Chapman, 2012, New York, NY: McGraw-Hill. Copyright 2012 by The McGraw-Hill Companies, Inc. Reprinted with permission.