Dr So Ping Lam
Associate Professor

Office: EEE-S1-B1c-77

Tel: +65 6790 5026

Email: eplso@ntu.edu.sg

Disclaimer

The preceding/ following videos contain slides with materials that were originally used for delivery in lecture halls and/ or classrooms in Nanyang Technological University. They might contain adapted materials. While every effort has been made to undertake due diligence to identify the original source, this was not always possible for all materials. The videos are used solely for educational purposes to support the Technology-Enhanced Learning (TEL) aspects of the course. TEL is hosted and deployed in NTULearn and i-NTULearn, a learning management system accessed by students at NTU assigned with a user ID and password. This disclaimer states that no copyright infringement was intended. Should any disagreement or dispute arise, including any claims to rightful ownership, kindly contact CITS, NTU, at +65 6790 5231.

Lecture 1:
Electromagnetic Principles and Actuators

EE3010: Electrical Devices and Machines

School of Electrical and Electronic Engineering

Lecture Schedule

Topic	Week	Course Instructor
Electromagnetic Principles and Actuators	1 – 3	A/P So Ping Lam
Transformers	4 – 7	A/P So Ping Lam
AC Machines	7 – 9	A/P Lee Peng Hin
DC Machines	10 – 12	A/P Lee Peng Hin

Books

- Main textbook:
  - Bhag S. Guru and Huseyin R. Hiziroglu, **Electric Machinery and Transformers**, 3rd Edition, Oxford University Press, 2001.
    (The lecture notes will follow the textbook very closely. Students are encouraged to read the book.)

- Reference textbooks:
  - P. C. Sen, **Principles of Electric Machines and Power Electronics**, 2nd Edition, John Wiley, 1997.
  - Stephen J. Chapman, **Electric Machinery and Power System Fundamentals**, 1st Edition, McGraw-Hill, 2002.
  - G. B. Shrestha and M. H. Haque, **AC Circuits and Machines**, Singapore: Pearson Education South Asia, 2006.

Topics

(**Chapters 2 and 3 – Bhag S. Guru, Electric Machinery and Transformers**)

1. Electromagnetism
   i. Magnetic Materials, Magnetic Circuits
   ii. Flux Linkage, Laws of Induction, Inductance
   iii. Magnetic Field/ Stored Energy
   iv. AC Operation, Core Losses

2. Electromechanical Energy Conversion
   i. Energy Conversion Process: Energy Balance
   ii. Stored Energy
   iii. Production of Mechanical Force

Learning Objectives

By the end of this lecture, you should be able to:

- Apply the basic electromagnetic principles in subject, including the Right Hand Rule and Ampere's Law.
- Describe how a magnetic field is created around a conductor when an electric current is flowing in a conductor.
- Examine the relationship between the flux density and field intensity in a medium of air and in a medium of magnetic material.
- Explain how the magnetic flux and flux density can be enhanced in a magnetic field by using magnetic core materials and large number of turns.

Introduction

- The operations of different electric machines are based on different aspects of the principles of electromagnetism.

- Basic understanding of electromagnetic fields is important to clearly understand the behaviour of electric machines.

- Electric machines can be classified as:
  - **Static machines** involving no motion, such as transformers and inductors.
  - **Linear motion and rotating machines** involving mechanical movement, such as solenoids, relays and motors, generators, etc.

Introduction

- The fundamental theory of electromagnetic fields is based on the Maxwell's Equations (see Appendix I).
- General concepts in electromagnetism, without going into such complex equations, will be discussed in this chapter.
- Our discussions will be from the viewpoint of practical application.

Notations

- B, H: Normal letters indicate vectors.
- B, H: Italic letters indicate the magnitudes of the corresponding vectors.
- i, v: Lower case letters indicate **dc** quantities, or the instantaneous values of **ac** quantities.

Table 1. Important terms, symbols and units in electromagnetism.

Quantity	Symbol(s)	Unit(s)	
Magnetomotive Force (mmf)	F, (NI)	A	At
Magnetic Field Strength	H	A/m	At/m
Magnetic Flux	φ	Wb	-
Magnetic Flux Density	B	T	Wb/m^2
Flux Linkage	λ	Wb	Wb t
Inductance	L	H	-
Permeability	μ, μ_0	H/m	-
Relative Permeability	μ_r	-	-
Reluctance	$\Re$	H^{-1}	At/Wb
Key: A: Ampere, Wb: Weber	t: turns, T: Tesla	m: metre, H: Henry	

Magnetic Field Intensity (H)

- A flow of electric current in a conductor creates a magnetic field around the conductor as shown in Fig. 1.
  - The direction of the magnetic field is defined by the Right Hand Rule.

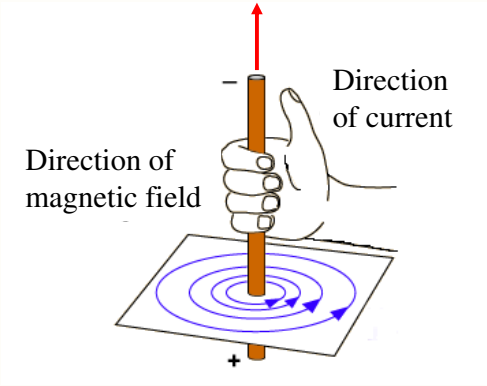

Fig. 1. Right Hand Rule.

Magnetic Field Intensity (H)

- The relationship between the magnetic field intensity (H) along a closed path established by a current I (see Fig. 2) is specified by **Ampere's Law**, which states

$$\oint_c \vec{H}\,\overrightarrow{d\ell} = I_{enc \leftarrow \text{enclosed}}$$

- In general, the evaluation of this integral around any closed loop may not be easy.

- However, the application of this principle can be easily adopted in many practical situations. For example, when H is constant,

$$\oint_c \vec{H}\,\overrightarrow{d\ell} = H\oint_c d\ell = H\ell$$

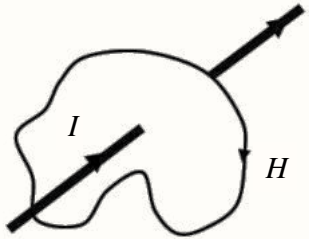

Fig. 2. Magnetic field intensity along a closed path.

Reproduced with permission from [9789810676575, G. B. Shrestha and M. H. Haque, *AC Circuits and Machines*; Pearson Education South Asia Pte. Ltd.]

Magnetic Field Produced by a Conductor

- Consider a long straight conductor carrying a current I as shown in Fig. 3. To find the magnetic field at a distance r from the conductor, imagine a circular path of radius r around the conductor. Because of symmetry, it is clear that the field intensity H will be the same throughout the circular path.

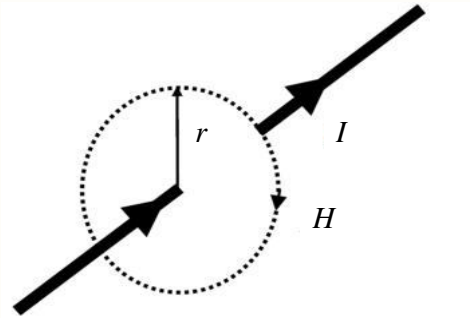

Fig. 3. Single conductor.

Reproduced with permission from [9789810676575, G. B. Shrestha and M. H. Haque, *AC Circuits and Machines*; Pearson Education South Asia Pte. Ltd.]

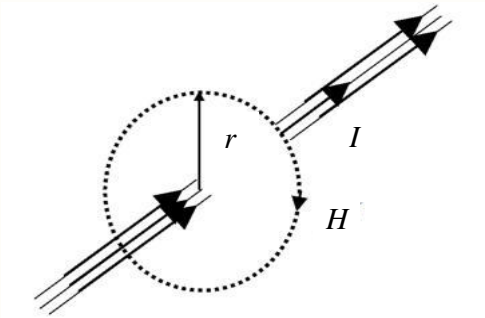

Fig. 4. Multiple conductors.

Reproduced with permission from [9789810676575, G. B. Shrestha and M. H. Haque, *AC Circuits and Machines*; Pearson Education South Asia Pte. Ltd.]

Magnetic Field Produced by a Conductor

- Therefore,

$$\oint_c \vec{H}\,\overrightarrow{d\ell} = I_{enc} \Rightarrow H\oint_c \overrightarrow{d\ell} = H\ell = H\,2\pi r = I_{enc} = I$$

$$\Rightarrow H = I/(2\pi r) \text{ A/m or At/m}$$

- When there are N conductors as shown in Fig. 4, each carrying a current I, then

$$I_{enc} = NI \Rightarrow H = NI/(2\pi r) \text{ A/m or At/m}$$

$$\Rightarrow H\ell = NI$$

Magnetic Flux (φ) and Flux Density (B)

- The magnetic field intensity H produces a magnetic flux (φ) and the flux per unit area is the flux density (B) as shown in Fig. 5.

- In a medium of free space (or air) the flux density is related to the field intensity as

$$B = \mu_0 H \ \ [\text{Wb/m}^2 \ \text{ or T (Tesla)}]$$

where μ_0 $(=4\pi \times 10^{-7}\,\text{H/m})$ is the permeability of free space.

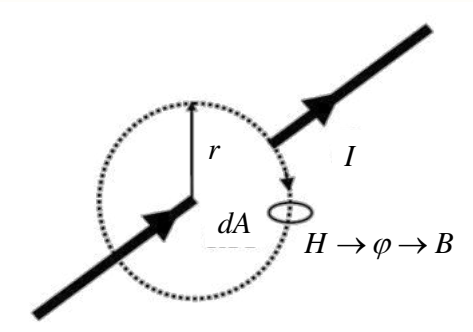

Fig. 5. Magnetic field strength, flux, and flux density.

Reproduced with permission from [9789810676575, G. B. Shrestha and M. H. Haque, *AC Circuits and Machines*; Pearson Education South Asia Pte. Ltd.]

Magnetic Flux (φ) and Flux Density (B)

- The flux can then be calculated as

  $\varphi = \int_A B dA = B \int_A dA = BA$, when B is constant.

- It should be noted that both B and φ remain very small in the medium of air because of the very small value of μ_0.

Magnetic Materials

- The magnetic flux or the flux density may be enhanced in a magnetic field by the use of magnetic materials. Consider a toroid of steel (see Fig. 6) of radius r around the current carrying conductor. Then,

  $$H = \frac{I}{2\pi r} \text{ as before.}$$

  But $B = \mu_0 \mu_r H = \mu H$ [Wb/m^2 or T(Tesla)]

  where

  μ_0 is the permeability of free space,

  μ_r is the relative permeability of steel, and

  $\mu = \mu_0 \mu_r$ is the permeability of steel.

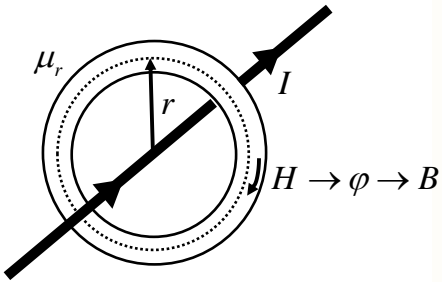

Fig. 6. Toroid of steel.

Reproduced with permission from [9789810676575, G. B. Shrestha and M. H. Haque, *AC Circuits and Machines*; Pearson Education South Asia Pte. Ltd.]

Magnetic Materials

- μ_r is near unity (1) for non-magnetic materials, but it can be very high (2000 – 6000) for ferro-magnetic materials.

- Thus, the use of magnetic materials can enhance the flux density B and therefore the flux φ by several orders of magnitude for the same field intensity H.

Example 1

Consider a single conductor transmission line carrying 200 A of current as shown in Fig. 7. Find the magnetic field strength in a house located 20 m from the conductor. If the floor area of the house is 80 m^2, estimate the total flux passing through the house.

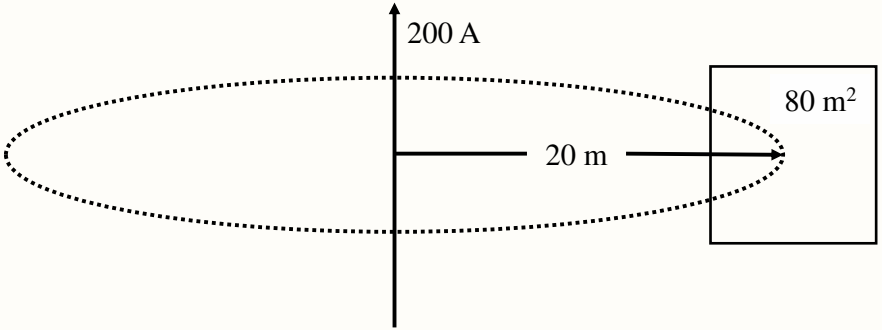

Fig. 7. Magnetic field produced by a current carrying conductor.

Reproduced with permission from [9789810676575, G. B. Shrestha and M. H. Haque, *AC Circuits and Machines*; Pearson Education South Asia Pte. Ltd.]

(Solutions →)

Example 1 – Solutions

Using the earlier results,

$$H = \frac{I}{2\pi r} = \frac{200}{2\pi \times 20} = 1.59 \text{ A/m}$$

Therefore,

$$B = \mu_0 H = 4\pi \times 10^{-7} \frac{I}{2\pi r} = 2 \times 10^{-7} \frac{I}{r} = 2 \times 10^{-7} \frac{200}{20} = 2 \times 10^{-6} \text{ T}$$

and,

$$\varphi = BA = 2 \times 10^{-6} \times 80 = 1.6 \times 10^{-4} \text{ Wb}$$

Magnetic Circuits in Electric Machines

In order to obtain reasonably high values of flux density and flux, most electromagnetic machines (see Figs. 8 and 9) commonly use:

- A structure of magnetic materials to utilise the benefit of high permeability.
- Coils of a large number of turns to increase the total enclosed current.

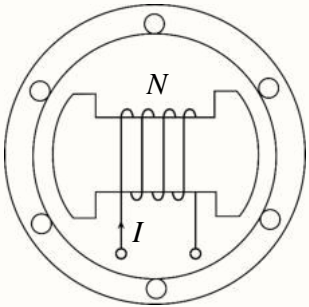

Fig. 8. Rotating machine.

Reproduced with permission from [9789810676575, G. B. Shrestha and M. H. Haque, *AC Circuits and Machines*; Pearson Education South Asia Pte. Ltd.]

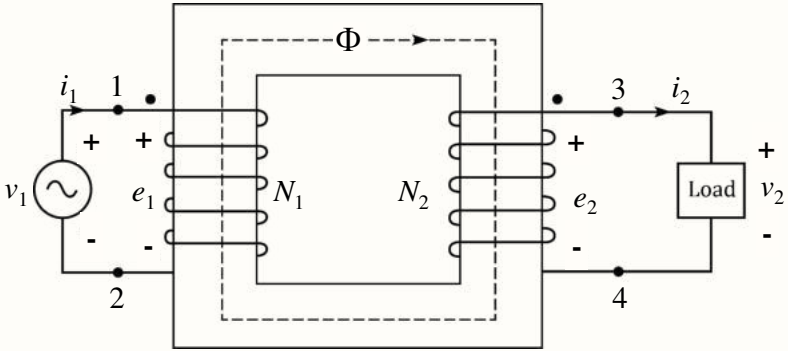

Fig. 9. Transformer.

Magnetic Circuits in Electric Machines

- In such structures, the flux density inside the core structure will be several orders of magnitude higher than in the surrounding space.
- Therefore, the flux outside the magnetic core can be conveniently ignored when analysing electromagnetic machines and magnetic structures.

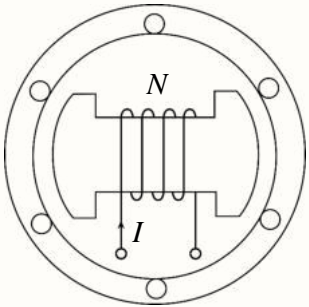

Fig. 8. Rotating machine.

Reproduced with permission from [9789810676575, G. B. Shrestha and M. H. Haque, *AC Circuits and Machines*; Pearson Education South Asia Pte. Ltd.]

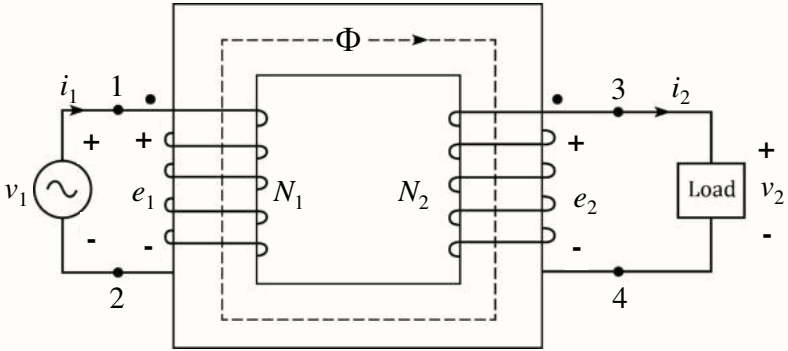

Fig. 9. Transformer.

Magnetic Materials – Non-magnetic Materials

- Non-magnetic materials are classified into two groups:
  - **Diamagnetic materials** have relative permeability slightly less than unity as shown in Table 2, and these materials experience a very feeble repulsive force in magnetic fields.

Table 2. Relative permeabilities of some diamagnetic materials.

Material	Relative Permeability
Bismuth	0.999 981
Beryllium	0.999 987
Copper	0.999 991
Methane	0.999 969
Silver	0.999 980
Water	0.999 991

Magnetic Materials – Non-magnetic Materials

- **Paramagnetic materials** have relative permeability slightly more than unity as shown in Table 3, and these materials experience a very feeble attractive force in magnetic fields.

Table 3. Relative permeabilities of some paramagnetic materials.

Material	Relative Permeability
Air	1.000 304
Aluminium	1.000 023
Oxygen	1.001 330
Manganese	1.000 124
Palladium	1.000 800
Platinum	1.000 014

❖ Ferro-magnetic materials have very high relative permeability and experience very strong attractive force in magnetic fields.

Ferro-magnetism

- Consider the magnetic circuit as shown in Fig. 10.
  - The current I in the coil produces field strength H, which in turn produces flux φ and flux density B.
  - The relationship between B and H can be explained using the notions of magnetic dipoles and magnetic domains.

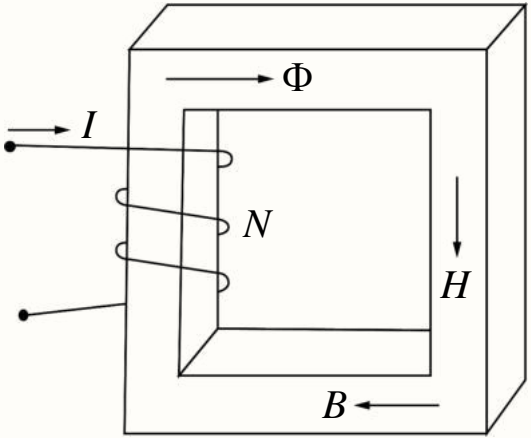

Fig. 10. Magnetic core.

Ferro-magnetism

- In the absence of any current in the coil (i.e., with no H applied), the dipoles are all randomly oriented and the magnetic domains cancel out each other, resulting in no net flux and flux density as shown in Figs. 11 and 12.
- With the injection of current (i.e., with H applied), the magnetic domains become aligned, resulting in higher flux and flux density. Once all the domains are aligned, increase in I (i.e., H) cannot produce further increase in B.

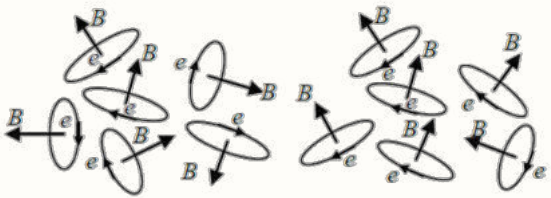

Fig. 11. Magnetic dipoles.

Reproduced with permission from [9789810676575, G. B. Shrestha and M. H. Haque, *AC Circuits and Machines*; Pearson Education South Asia Pte. Ltd.]

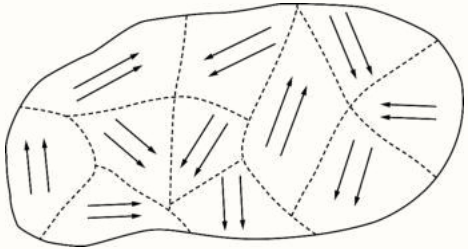

Fig. 12. Magnetic domains.

Summary

In this lecture, you have learnt:

- A magnetic field produced in a conductor when an electric current is flowing in a conductor.
- The flux density B related to the field intensity H in a medium of air and in a medium of magnetic material.
- The magnetic flux and flux density enhanced in a magnetic field by using structure of magnetic materials and coils of a large number of turns.

Appendix 1: Maxwell's Equations

- The four Maxwell's equations are

a) $\nabla \times \vec{E} = -\dfrac{\partial \vec{B}}{\partial t}$ or $\oint_c \vec{E} \bullet \vec{d\ell} = -\int_s \dfrac{\partial \vec{B}}{\partial t} \bullet \vec{ds}$

b) $\nabla \times \vec{H} = \vec{J} + \dfrac{\partial \vec{D}}{\partial t}$ or $\oint_c \vec{H} \bullet \vec{d\ell} = \oint_s \vec{J} \bullet \vec{ds} + \int_s \dfrac{\partial \vec{D}}{\partial t} \bullet \vec{ds}$

c) $\nabla \bullet \vec{B} = 0$ or $\oint_s \vec{B} \bullet \vec{ds} = 0$

d) $\nabla \bullet \vec{D} = \rho$ or $\oint_s \vec{D} \bullet \vec{ds} = \int_\upsilon \rho \, d\upsilon$

Appendix 1: Maxwell's Equations

- The four Maxwell's equations are used along with the following additional equations:

a) $\nabla \bullet \vec{J} = -\dfrac{\partial \rho}{\partial t}$

b) $\vec{F} = q\left[\vec{E} + \vec{\upsilon} \times \vec{B}\right]$

c) $\vec{D} = \in \vec{E} = \in_r \in_0 \vec{E}$

$\vec{B} = \mu \vec{H} = \mu_r \mu_0 \vec{H}$

d) $\in_0 = 8.854 \times 10^{-12} \approx \dfrac{10^{-9}}{36\pi}$ farad/meter (F/m)

$\mu_0 = 4\pi \times 10^{-7}$ henry/meter (H/m)

References

No.	Slide No.	Image	Reference
1	11	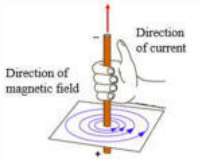	From *Moving Electrical Charges Create Magnetic Field*, by R. Kurtus, 2012 (http://www.school-for-champions.com/science/magnetic_field_moving_charges.htm#.WVEU8lR97IW). Copyright 2016 by Ron Kurtus and School for Champions LLC. Retrieved on 26 June 2017.
2	12	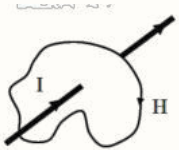	Reprinted from *AC Circuits and Machines*, (p. 85), by G. B. Shrestha, & M. H. Haque, 2006, Singapore: Pearson Education South Asia Pte. Ltd. Copyright 2006 by Pearson Education South Asia Pte. Ltd. Reprinted with permission.
3	13	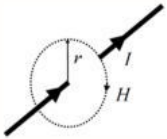	Reprinted from *AC Circuits and Machines*, (p. 86), by G. B. Shrestha, & M. H. Haque, 2006, Singapore: Pearson Education South Asia Pte. Ltd. Copyright 2006 by Pearson Education South Asia Pte. Ltd. Reprinted with permission.

References

No.	Slide No.	Image	Reference
4	13	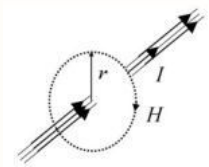	Reprinted from *AC Circuits and Machines*, (p. 86), by G. B. Shrestha, & M. H. Haque, 2006, Singapore: Pearson Education South Asia Pte. Ltd. Copyright 2006 by Pearson Education South Asia Pte. Ltd. Reprinted with permission.
5	15	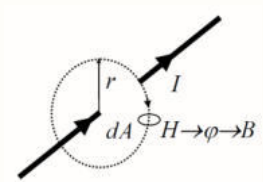	Reprinted from *AC Circuits and Machines*, (p. 87), by G. B. Shrestha, & M. H. Haque, 2006, Singapore: Pearson Education South Asia Pte. Ltd. Copyright 2006 by Pearson Education South Asia Pte. Ltd. Reprinted with permission.
6	17	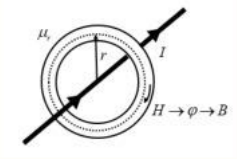	Reprinted from *AC Circuits and Machines*, (p. 88), by G. B. Shrestha, & M. H. Haque, 2006, Singapore: Pearson Education South Asia Pte. Ltd. Copyright 2006 by Pearson Education South Asia Pte. Ltd. Reprinted with permission.

References

No.	Slide No.	Image	Reference
7	19	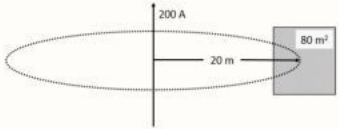	Reprinted from *AC Circuits and Machines*, (p. 89), by G. B. Shrestha, & M. H. Haque, 2006, Singapore: Pearson Education South Asia Pte. Ltd. Copyright 2006 by Pearson Education South Asia Pte. Ltd. Reprinted with permission.
8	21 and 22	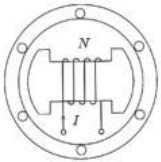	Reprinted from *AC Circuits and Machines*, (p.90), by G. B. Shrestha, & M. H. Haque, 2006, Singapore: Pearson Education South Asia Pte. Ltd. Copyright 2006 by Pearson Education South Asia Pte. Ltd. Reprinted with permission.
9	21 and 22	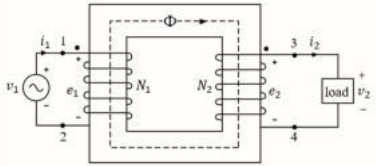	Reprinted from *Electric Machinery and Transformers, 3rd ed.*, (p. 207), by B. S. Guru, & H. R. Hiziroglu, 2001, New York, NY: Oxford University Press. Copyright 2001 by Oxford University Press.

References

No.	Slide No.	Image	Reference
10	25	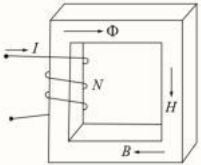	Reprinted from *Electric Machinery and Transformers, 3rd ed.*, (p. 79), by B. S. Guru, & H. R. Hiziroglu, 2001, New York, NY: Oxford University Press. Copyright 2001 by Oxford University Press.
11	26	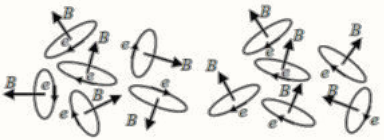	Reprinted from *AC Circuits and Machines*, (p. 91), by G. B. Shrestha, & M. H. Haque, 2006, Singapore: Pearson Education South Asia Pte. Ltd. Copyright 2006 by Pearson Education South Asia Pte. Ltd. Reprinted with permission.
12	26	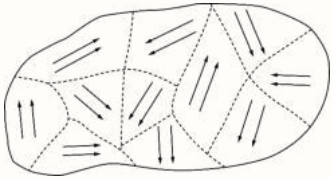	Reprinted from *Electric Machinery and Transformers, 3rd ed.*, (p. 79), by B. S. Guru, & H. R. Hiziroglu, 2001, New York, NY: Oxford University Press. Copyright 2001 by Oxford University Press.

References

No.	Slide No.	Table	Reference
1	23		Reprinted from *Electric Machinery and Transformers, 3rd ed.*, (p. 77), by B. S. Guru, & H. R. Hiziroglu, 2001, New York, NY: Oxford University Press. Copyright 2001 by Oxford University Press.
2	24		Reprinted from *Electric Machinery and Transformers, 3rd ed.*, (p. 77), by B. S. Guru, & H. R. Hiziroglu, 2001, New York, NY: Oxford University Press. Copyright 2001 by Oxford University Press.

Material	Relative Permeability
Bismuth	0.999 981
Beryllium	0.999 987
Copper	0.999 991
Methane	0.999 969
Silver	0.999 980
Water	0.999 991

Material	Relative Permeability
Air	1.000 304
Aluminium	1.000 023
Oxygen	1.001 330
Manganese	1.000 124
Palladium	1.000 800
Platinum	1.000 014

Lecture 2: Electromagnetic Principles and Actuators

EE3010: Electrical Devices and Machines

School of Electrical and Electronic Engineering

Associate Professor So Ping Lam
Tel: +65 6790 5026 | Email: eplso@ntu.edu.sg

Disclaimer

The preceding/ following videos contain slides with materials that were originally used for delivery in lecture halls and/ or classrooms in Nanyang Technological University. They might contain adapted materials. While every effort has been made to undertake due diligence to identify the original source, this was not always possible for all materials. The videos are used solely for educational purposes to support the Technology-Enhanced Learning (TEL) aspects of the course. TEL is hosted and deployed in NTULearn and i-NTULearn, a learning management system accessed by students at NTU assigned with a user ID and password. This disclaimer states that no copyright infringement was intended. Should any disagreement or dispute arise, including any claims to rightful ownership, kindly contact CITS, NTU, at +65 6790 5231.

Learning Objectives

By the end of this lecture, you should be able to:

- Explain the characteristics of magnetisation curve (B-H curve) in three important stages, including linear region, knee region and saturation region.
- Apply the principles of magnetic circuit and Ampere's Law to derive equations to calculate the magnetomotive force, reluctance, magnetic flux and flux density.
- Identify the procedures for developing magnetic equivalent circuits.
- Apply electric circuit theory to analyse and solve magnetic circuit problems.

Ferro-magnetism: Magnetisation Characteristics

- Magnetisation characteristics (B-H curve):
  - Fig. 13 shows the variation of flux density B in ferro-magnetic material for increasing values of H.
  - Initially, B increases almost linearly with H as more domains are aligned, but the increase in B slows down at higher values of H when left with lesser domains for alignment. Finally, B saturates to a certain value B_m when all the domains have aligned.

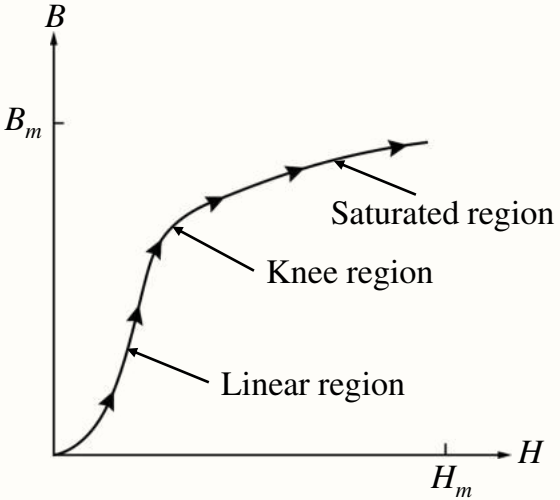

Fig. 13. Typical B-H curve.

Ferro-magnetism

- This curve is called the **Magnetisation Curve** or **B-H Curve**, and the important stages of the characteristics are indicated in Fig. 13:
  - Linear region, where B increases almost linearly with H.
  - Knee region, where the increase in B slows down significantly.
  - Saturation region, when B stops increasing and practically flattens.

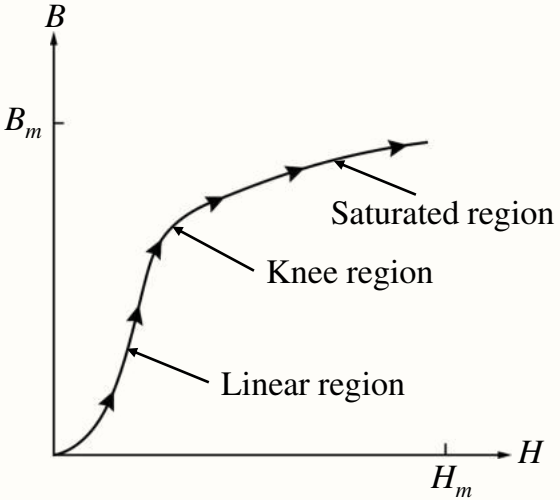

Fig. 13. Typical B-H curve.

Typical Magnetisation (B-H) Curves

- The B-H curves for three common magnetic materials are shown in Fig. 14.
- Note that different materials saturate at different levels of flux density.
- The initial portions of the curves (for lower values of B) are almost linear, where $B=\mu H$ with constant μ which is valid for the linear regions of the curves only.
- The permeability μ changes rapidly after the knee point (in the saturation region).

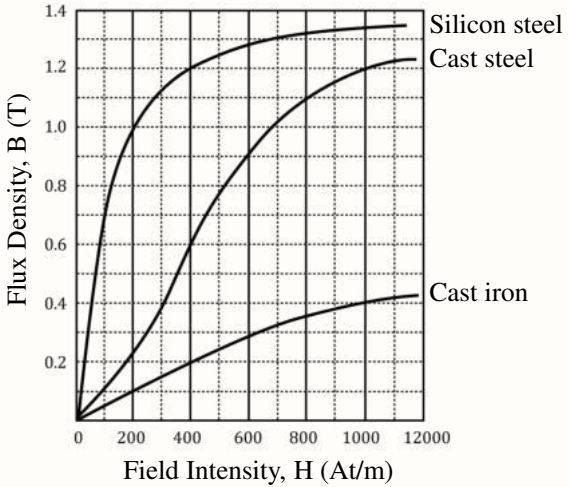

Fig. 14. Typical B-H curves.

Reproduced with permission from [9789810676575, G. B. Shrestha and M. H. Haque, *AC Circuits and Machines*; Pearson Education South Asia Pte. Ltd.]

Typical Magnetisation (B-H) Curves

- To keep the analysis simple, this course will consider the magnetic system to operate in the linear region, unless otherwise stated.

Permeability

- Since $B=\mu H$, the permeability μ of the material can be obtained as the ratio of B/H at each point of the magnetisation curve.
  - For example, at a point where $B=B_1$, and $H=H_1$: $\mu_1=B_1/H_1$ (**H/m**) as shown in Fig. 15.
- The value of μ increases with H to a max value, and then decreases steadily after saturation sets in.
- The value of μ remains approximately constant (within narrow limits) in the operating range of the flux density B.

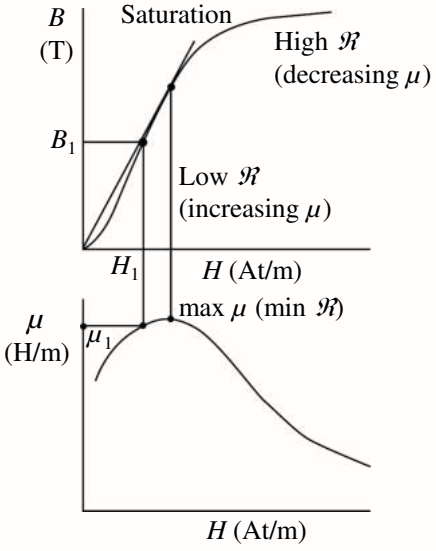

Fig. 15. Variation of permeability.

Reproduced with permission from [9789810676575, G. B. Shrestha and M. H. Haque, *AC Circuits and Machines*; Pearson Education South Asia Pte. Ltd.]

Magnetic Circuits

- The flow of magnetic flux (φ) in a magnetic circuit created by the current flowing in a coil may be analysed as the flow of current in an electric circuit. Consider the magnetic circuit shown in Fig. 16.

- Common assumptions:
  - The flux is restricted to the magnetic core (i.e., no leakage of flux).
  - The magnetic flux density (B) is uniform within the magnetic core, which is taken as the flux density along the mean path. ($B=\varphi/A$)

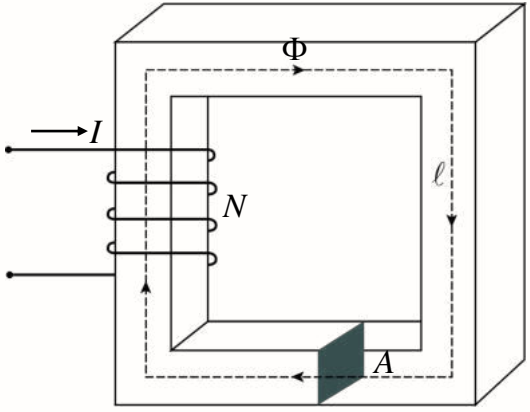

Fig. 16. Magnetic circuit.

Magnetic Circuits

- Applying Ampere's Law along the mean path,

$$\oint_c \vec{H}\,\overrightarrow{d\ell} = I_{enc}$$

Since $\oint_c \vec{H}\,\overrightarrow{d\ell} = H\oint_c \overrightarrow{d\ell} = H\ell$

and $I_{enc} = NI$

We get $H\ell = NI$

so that $B = \mu H = \dfrac{\mu NI}{\ell}$

and flux $\varphi = BA = \dfrac{\mu ANI}{\ell} = \dfrac{NI}{(\ell/\mu A)} = \dfrac{F}{\mathfrak{R}} \Rightarrow F = NI = \varphi\mathfrak{R}$

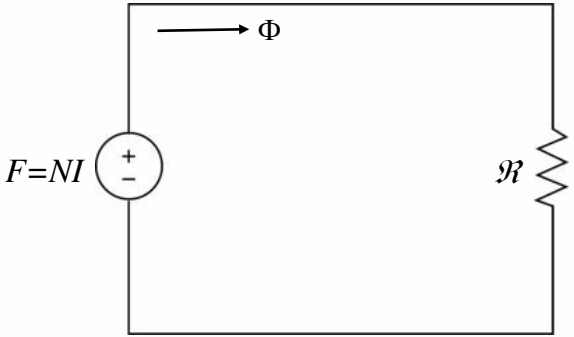

Fig. 17. Magnetic equivalent circuit.

Magnetic Circuits

- $F=NI$ is called the ***Magnetomotive Force*** (***mmf***), analogous to electromagnetic force (*emf*). Note that this depends purely on the electrical properties of the coil or the winding.

- $\mathcal{R}=\ell/\mu A$ is called the ***Reluctance***, analogous to resistance. Note that this is purely a property of the magnetic core material and the structure.

- $\varphi=F/\mathcal{R}$ or $F=\varphi\mathcal{R}$ is called the ***Ohm's Law*** for the magnetic equivalent circuit, which may be drawn as shown in Fig. 17.

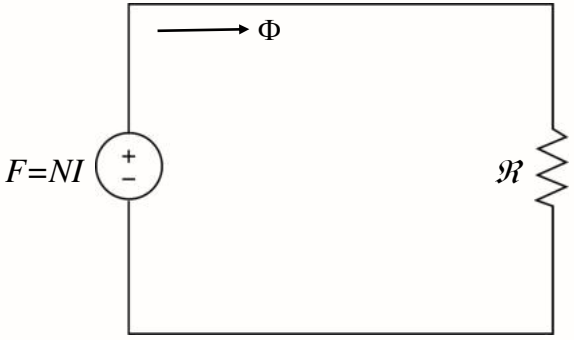

Fig. 17. Magnetic equivalent circuit.

Magnetic Equivalent Circuits

- Procedures for developing magnetic equivalent circuits:
  - Coils represent sources. Use Right Hand Rule to specify the direction of flux.
  - Trace the mean path followed by the flux.
  - Reluctance of various sections with different flux in them must be evaluated separately.
  - For a section with the same flux, reluctances may have to be found separately for different sub-sections, if they have different medium (core material, air gap, etc.) and different cross-sectional area.

Magnetic Equivalent Circuits

- When the magnetic circuit consists of two or more closed loops, Kirchhoff's Voltage Law (KVL) can be applied:

  $NI = \sum H_i \ell_i = \sum \varphi_i \mathcal{R}_i$, for each closed loop.

- Magnetic circuits can be analysed using magnetic equivalent circuits as long as the circuit remains linear, i.e., the permeability μ remains constant.

Example 2

a) Put in the source and its direction (see Figs. 18 and 19).

b) Identify and trace the paths of φ, φ_1 and φ_2.

c) Find the reluctances of different sections using $\mathfrak{R} = \ell/\mu A$.
Reluctances of sections, ***be***, ***bcde*** and ***bafe*** must be found separately.

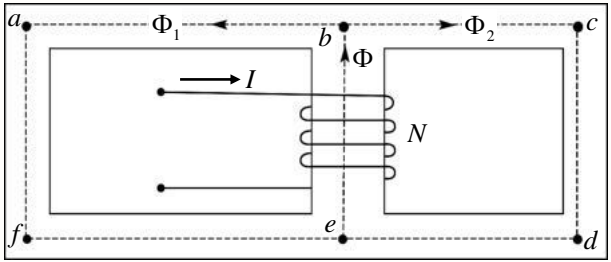

Fig. 18. Magnetic circuit.

Reproduced with permission from [9789810676575, G. B. Shrestha and M. H. Haque, *AC Circuits and Machines*; Pearson Education South Asia Pte. Ltd.]

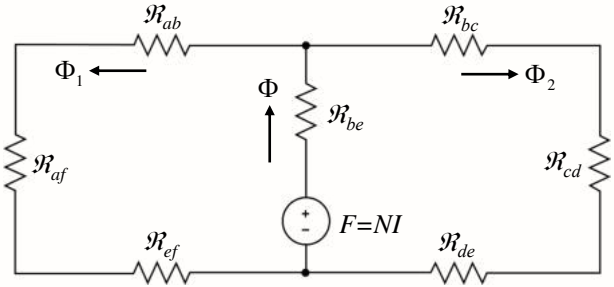

Fig. 19. Magnetic equivalent circuit.

Reproduced with permission from [9789810676575, G. B. Shrestha and M. H. Haque, *AC Circuits and Machines*; Pearson Education South Asia Pte. Ltd.]

Example 2

d) Although the same flux flows through sub-sections, ***bc***, ***cd***, ***de***, their reluctances may be found separately if (i) different materials are involved, and (ii) the cross sectional areas are different. Similarly, for sub-sections ***ba***, ***af*** and ***fe***.

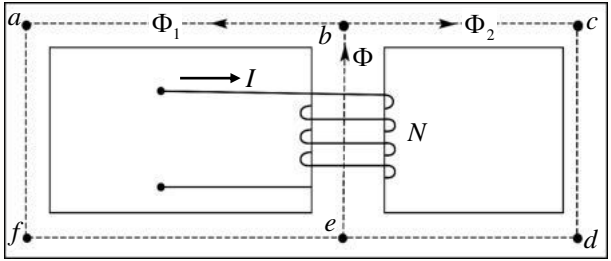

Fig. 18. Magnetic circuit.

Reproduced with permission from [9789810676575, G. B. Shrestha and M. H. Haque, *AC Circuits and Machines*; Pearson Education South Asia Pte. Ltd.]

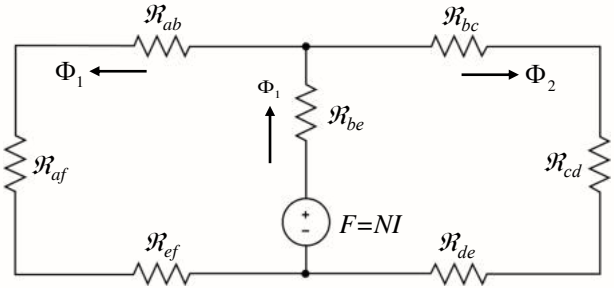

Fig. 19. Magnetic equivalent circuit.

Reproduced with permission from [9789810676575, G. B. Shrestha and M. H. Haque, *AC Circuits and Machines*; Pearson Education South Asia Pte. Ltd.]

Magnetic Circuit Problems

❖ The basic tasks in the analysis of various magnetic circuits are (see Fig. 20):

- To determine the mmf (or the current in the coil) necessary to establish a given flux or flux density.
- To find the flux density in different sections for a given mmf (or a given current).

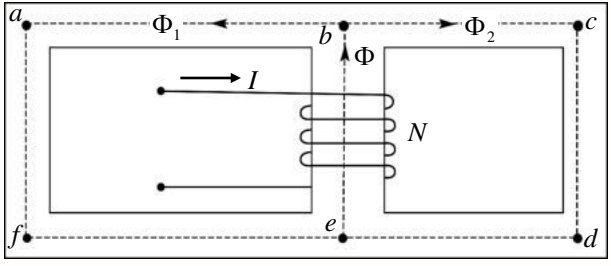

Fig. 20. Magnetic equivalent circuit.

Reproduced with permission from [9789810676575, G. B. Shrestha and M. H. Haque, *AC Circuits and Machines*; Pearson Education South Asia Pte. Ltd.]

Magnetic Circuit Problems

- Solution techniques:
  - For linear magnetic circuits (i.e., under constant μ), both these problems can be solved by using the magnetic equivalent circuit and applying the electric circuit analysis methods.
  - For a nonlinear circuit, it is still straightforward to calculate the mmf required to establish the necessary flux. But, calculation of flux density for a given mmf requires an iterative solution.

Example 3 (Part 1)

Draw the magnetic equivalent circuit for the magnetic circuit with the dimensions as shown in Fig. 21. The depth of the core is 10 cm and μ_r of the material is known to be 1400. If the coil has 310 turns, estimate

a) the current required in the coil to obtain a flux density of 0.8 T in the coil, and

b) the flux density at different sections for a current of 2.8 A in the coil.

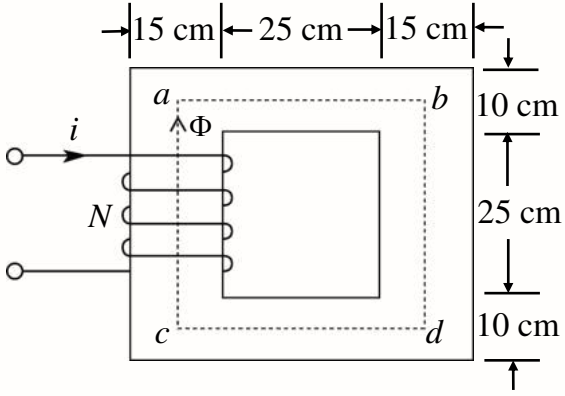

Fig. 21. Magnetic circuit.

Reproduced with permission from [9789810676575, G. B. Shrestha and M. H. Haque, *AC Circuits and Machines*; Pearson Education South Asia Pte. Ltd.]

(Solutions →)

Example 3 (Part 1) – Solutions

The cross-sectional areas of different sections are

$$A_{ab} = A_{cd} = 10 \times 10 = 100 \text{ cm}^2$$

$$A_{ac} = A_{bd} = 15 \times 10 = 150 \text{ cm}^2$$

The lengths of various sections are

$$\ell_{ab} = \ell_{cd} = 25 + 2 \times 15/2 = 40 \text{ cm}$$

$$\ell_{ac} = \ell_{bd} = 25 + 2 \times 10/2 = 35 \text{ cm}$$

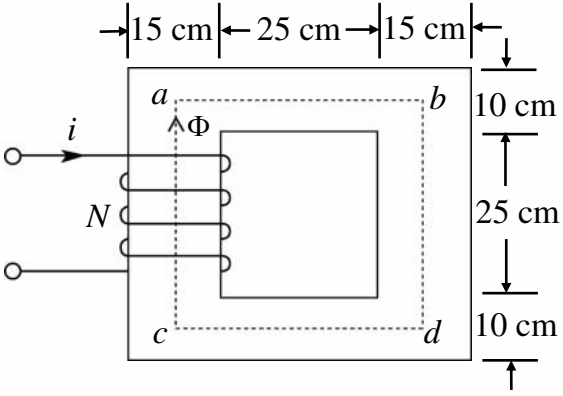

Fig. 21. Magnetic circuit.

Reproduced with permission from [9789810676575, G. B. Shrestha and M. H. Haque, *AC Circuits and Machines*; Pearson Education South Asia Pte. Ltd.]

Example 3 (Part 1) – Solutions

The magnetic equivalent circuit is drawn as shown in Fig. 22, where

$$\mathcal{R}_1 = \mathcal{R}_3 = \frac{35\times10^{-2}}{1400\times4\pi\times10^{-7}\times150\times10^{-4}} = 13263\ \mathrm{H}^{-1}$$

$$\mathcal{R}_2 = \mathcal{R}_4 = \frac{40\times10^{-2}}{1400\times4\pi\times10^{-7}\times100\times10^{-4}} = 22736\ \mathrm{H}^{-1}$$

Total equivalent reluctance

$$\mathcal{R}_{eq} = 2(\mathcal{R}_1 + \mathcal{R}_2) = 72000\ \mathrm{H}^{-1}$$

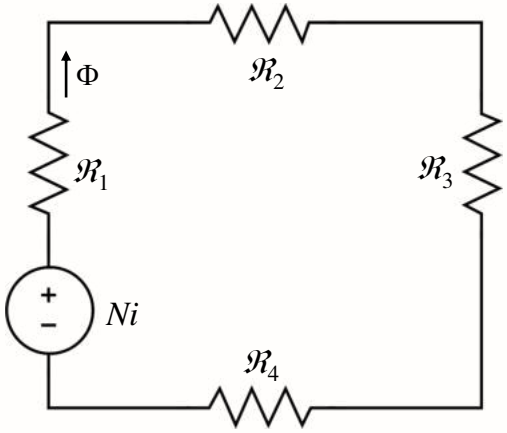

Fig. 22. Magnetic equivalent circuit.

Reproduced with permission from [9789810676575, G. B. Shrestha and M. H. Haque, *AC Circuits and Machines*; Pearson Education South Asia Pte. Ltd.]

Example 3 (Part 1) – Solutions

a) For a flux density of 0.8 T inside the coil (see Fig. 23),

$$\varphi_{ac} = B_{ac} \times A_{ac} = 0.8 \times 150 \times 10^{-4} = 0.012 \text{ Wb}$$

$$Ni = \varphi_{ac} \times \mathcal{R}_{\text{eq}} = 0.012 \times 72000 = 864$$

Therefore, $i = 864 / 310 = 2.787 \text{ A}$

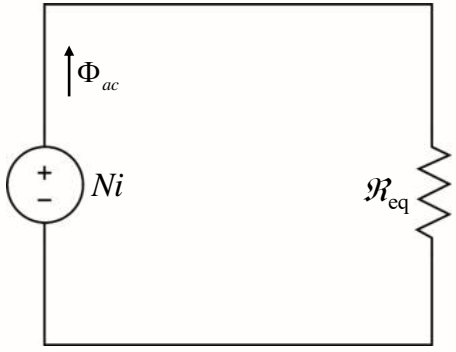

Fig. 23. Magnetic equivalent circuit.

Reproduced with permission from [9789810676575, G. B. Shrestha and M. H. Haque, *AC Circuits and Machines*; Pearson Education South Asia Pte. Ltd.]

Example 3 (Part 1) – Solutions

b) For a coil current of 2.8 A (see Fig. 24),

Flux $\varphi = Ni / \mathcal{R}_{eq} = 310 \times 2.8 / 72000 = 0.012 \text{ Wb}$

$$B_{\text{ab}} = B_{cd} = 0.012 / 100 \times 10^{-4} = 1.20 \text{ T}$$

$$B_{\text{ac}} = B_{bd} = 0.012 / 150 \times 10^{-4} = 0.80 \text{ T}$$

Thus, for linear circuits, tasks (a) and (b) are equivalent.

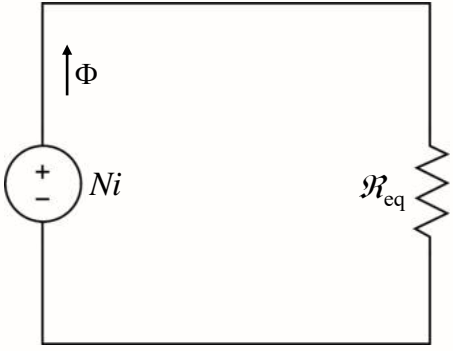

Fig. 24. Magnetic equivalent circuit.

Reproduced with permission from [9789810676575, G. B. Shrestha and M. H. Haque, *AC Circuits and Machines*; Pearson Education South Asia Pte. Ltd.]

Example 3 (Part 2)

If the core material in this example is cast steel with the B-H curve as shown in Fig. 25, find

a) the current required in the coil to obtain a flux density of 0.8 T in the coil.

b) The flux density at different sections for a current of 2.8 A in the coil.

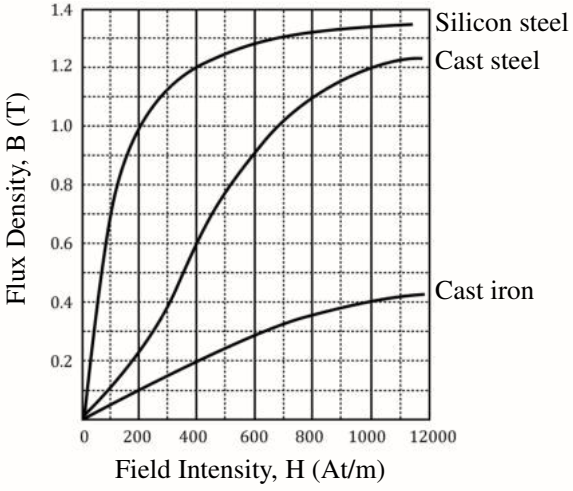

Fig. 25. Magnetisation (B-H) curves.

Reproduced with permission from [9789810676575, G. B. Shrestha and M. H. Haque, *AC Circuits and Machines*; Pearson Education South Asia Pte. Ltd.]

(Solutions →)

Example 3 (Part 2) – Solutions

From Example 3 (Part 1), as shown in Fig. 26.

$$A_{ab} = A_{cd} = 10 \times 10 = 100 \text{ cm}^2$$

$$A_{ac} = A_{bd} = 15 \times 10 = 150 \text{ cm}^2$$

$$\ell_{ab} = \ell_{cd} = 25 + 2 \times 15/2 = 40 \text{ cm}$$

$$\ell_{ac} = \ell_{bd} = 25 + 2 \times 10/2 = 35 \text{ cm}$$

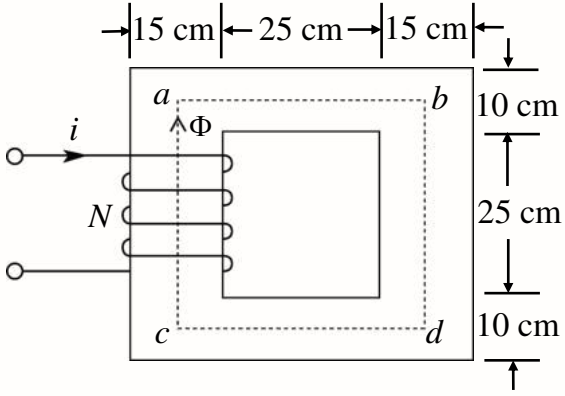

Fig. 26. Magnetic circuit.

Reproduced with permission from [9789810676575, G. B. Shrestha and M. H. Haque, *AC Circuits and Machines*; Pearson Education South Asia Pte. Ltd.]

Example 3 (Part 2) – Solutions

a) For a flux density of 0.8 T inside the coil,

$$B_{ac} = B_{bd} = 0.8 \text{ T}$$

From the B-H curve, $H_{ac} = H_{bd} = 450 \text{ A/m}$

Also, $\varphi_{ca} = B_{ca} \times A_{ca} = 0.8 \times 150 \times 10^{-4} = 0.012 \text{ Wb}$

$$= \varphi_{ab} = \varphi_{bd} = \varphi_{dc}$$

$$B_{ab} = B_{cd} = 0.012 / 100 \times 10^{-4} = 1.2 \text{ T}$$

From the B-H curve, $H_{ab} = H_{cd} = 1000 \text{ A/m}$

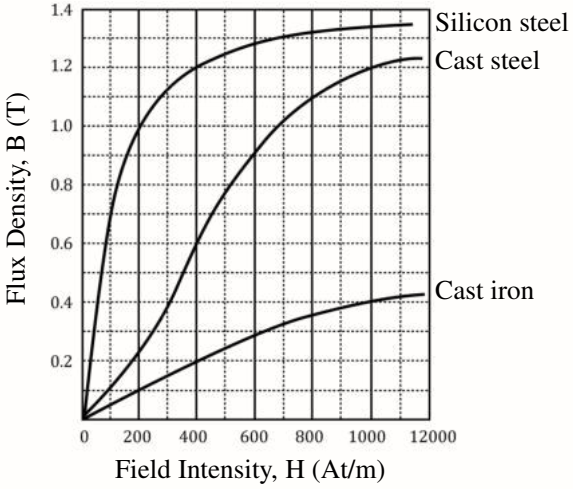

Fig. 25. Magnetisation (B-H) curves.

Reproduced with permission from [9789810676575, G. B. Shrestha and M. H. Haque, *AC Circuits and Machines*; Pearson Education South Asia Pte. Ltd.]

Example 3 (Part 2) – Solutions

Therefore,

$$Ni = \sum H_i \ell_i = 2(450 \times 0.35) + 2(1000 \times 0.4) = 1115 \text{ At}$$

$$\therefore i = 1115/310 \text{ A} = 3.6 \text{ A}$$

It should be noted that this current is quite different from the one obtained with the linear model.

This is because $B = 1.2 \text{ T}$ goes well into saturation, and the linear model assuming constant μ is no longer valid.

Example 3 (Part 2) – Solutions

b) Finding the flux density for a given coil current needs iterative solution and will not be discussed. But, it should be clear that at 2.8 A, the flux density in the coil will be significantly lower than 0.8 T.

- However, this course will consider only the linear operation of magnetic circuits where the magnetic equivalent circuits are valid. In such cases, all the electric circuit analysis techniques can be used in the magnetic equivalent circuits.

Summary

In this lecture, you have learnt:

- The characteristics of magnetisation curve (B-H curve) comprising three important stages including linear region, knee region and saturation region.

- Ampere's Law applied to derive the equations to calculate the magnetomotive force, reluctance, magnetic flux and flux density.

- The procedures for developing magnetic equivalent circuits and the electric circuit theories applied to analyse and solve magnetic circuit problems.

References

No.	Slide No.	Image	Reference
1	4 and 5	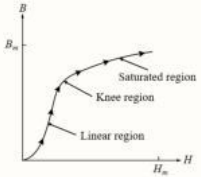	Reprinted from *Electric Machinery and Transformers, 3rd ed.*, (p. 80), by B. S. Guru, & H. R. Hiziroglu, 2001, New York, NY: Oxford University Press. Copyright 2001 by Oxford University Press.
2	6, 23 and 25	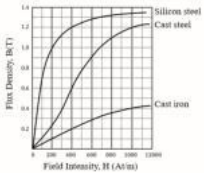	Reprinted from *AC Circuits and Machines*, (p. 93), by G. B. Shrestha, & M. H. Haque, 2006, Singapore: Pearson Education South Asia Pte Ltd. Copyright 2006 by Pearson Education South Asia Pte Ltd. Reprinted with permission.
3	8	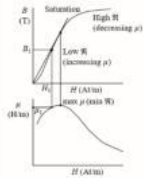	Reprinted from *AC Circuits and Machines*, (p. 94), by G. B. Shrestha, & M. H. Haque, 2006, Singapore: Pearson Education South Asia Pte Ltd. Copyright 2006 by Pearson Education South Asia Pte Ltd. Reprinted with permission.

References

No.	Slide No.	Image	Reference
4	9	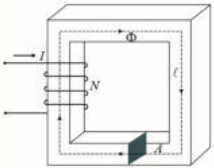	Reprinted from *Electric Machinery and Transformers, 3rd ed.*, (p. 87), by B. S. Guru, & H. R. Hiziroglu, 2001, New York, NY: Oxford University Press. Copyright 2001 by Oxford University Press.
5	10 and 11	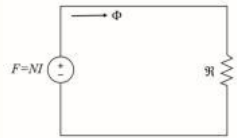	Reprinted from *Electric Machinery and Transformers, 3rd ed.*, (p.87), by B. S. Guru, & H. R. Hiziroglu, 2001, New York, NY: Oxford University Press. Copyright 2001 by Oxford University Press.
6	14, 15 and 16	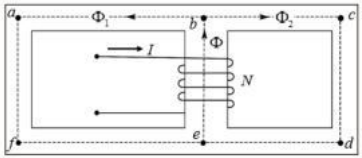	Reprinted from *Electric Machinery and Transformers, 3rd ed.*, (p. 89), by B. S. Guru, & H. R. Hiziroglu, 2001, New York, NY: Oxford University Press. Copyright 2001 by Oxford University Press.

References

No.	Slide No.	Image	Reference
7	14 and 15	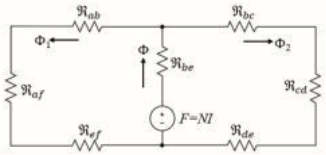	Reprinted from *AC Circuits and Machines*, (p. 97), by G. B. Shrestha, & M. H. Haque, 2006, Singapore: Pearson Education South Asia Pte Ltd. Copyright 2006 by Pearson Education South Asia Pte Ltd. Reprinted with permission.
8	18, 19 and 24	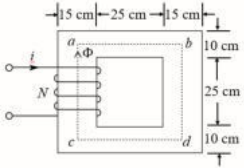	Reprinted from *AC Circuits and Machines*, (p. 134), by G. B. Shrestha, & M. H. Haque, 2006, Singapore: Pearson Education South Asia Pte Ltd. Copyright 2006 by Pearson Education South Asia Pte Ltd. Reprinted with permission.
9	20	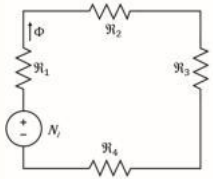	Reprinted from *AC Circuits and Machines*, (p. 99), by G. B. Shrestha, & M. H. Haque, 2006, Singapore: Pearson Education South Asia Pte Ltd. Copyright 2006 by Pearson Education South Asia Pte Ltd. Reprinted with permission.

References

No.	Slide No.	Image	Reference
10	21	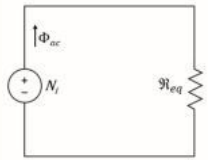	Reprinted from *AC Circuits and Machines*, (p. 99), by G. B. Shrestha, & M. H. Haque, 2006, Singapore: Pearson Education South Asia Pte Ltd. Copyright 2006 by Pearson Education South Asia Pte Ltd. Reprinted with permission.
11	22	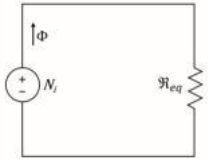	Reprinted from *AC Circuits and Machines*, (p. 99), by G. B. Shrestha, & M. H. Haque, 2006, Singapore: Pearson Education South Asia Pte Ltd. Copyright 2006 by Pearson Education South Asia Pte Ltd. Reprinted with permission.

Lecture 3: Electromagnetic Principles and Actuators

EE3010: Electrical Devices and Machines

School of Electrical and Electronic Engineering

Associate Professor So Ping Lam
Tel: +65 6790 5026 | Email: eplso@ntu.edu.sg

Disclaimer

The preceding/ following videos contain slides with materials that were originally used for delivery in lecture halls and/ or classrooms in Nanyang Technological University. They might contain adapted materials. While every effort has been made to undertake due diligence to identify the original source, this was not always possible for all materials. The videos are used solely for educational purposes to support the Technology-Enhanced Learning (TEL) aspects of the course. TEL is hosted and deployed in NTULearn and i-NTULearn, a learning management system accessed by students at NTU assigned with a user ID and password. This disclaimer states that no copyright infringement was intended. Should any disagreement or dispute arise, including any claims to rightful ownership, kindly contact CITS, NTU, at +65 6790 5231.

Learning Objectives

By the end of this lecture, you should be able to:

- Interpret the basic concepts of magnetic circuits with air gaps.
- Simplify the magnetic equivalent circuit using the laws of circuit analysis, e.g., series parallel combinations.
- Determine the magnetic flux and flux density in the air gaps using the simplified magnetic equivalent circuit.
- Analyse the concepts of magnetic circuits excited by sinusoidal sources.
- Explain how voltage is induced in a magnetic circuit using the Faraday's Law of Electromagnetic Induction.
- Derive equations to calculate the inductances of magnetic circuits.

Magnetic Circuits with Air Gaps

- Air gaps are integral part of magnetic circuits in various electric machines (see Fig. 27).
- Fringing of flux occurs in air gaps, but will be ignored in this course.
- The effects of air gaps in magnetic circuits will be illustrated with an example.

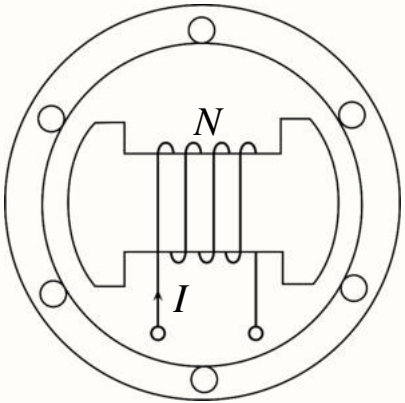

Fig. 27. Magnetic circuit with air gap.

Reproduced with permission from [9789810676575, G. B. Shrestha and M. H. Haque, *AC Circuits and Machines*; Pearson Education South Asia Pte. Ltd.]

Example 4

An electromagnet of square cross section, shown in Fig. 28, has a coil of 1500 turns. The inner and outer radii of the core are 10 cm and 12 cm respectively, and the air gap is 1 cm. If the current in the coil is 4 A and the relative permeability of the core material is 1200, determine the flux density in the circuit.

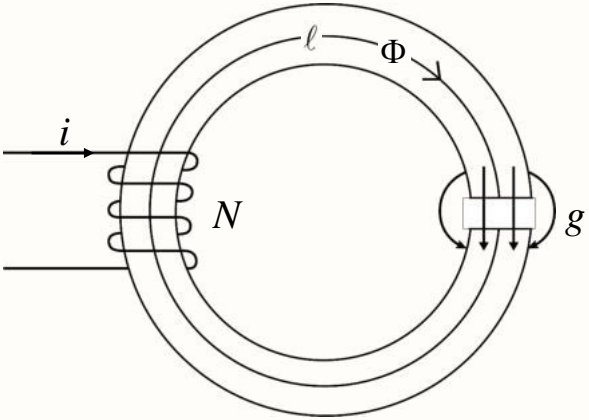

Fig. 28. Electromagnet with air gap.

Reproduced with permission from [9789810676575, G. B. Shrestha and M. H. Haque, *AC Circuits and Machines*; Pearson Education South Asia Pte. Ltd.]

(Solutions →)

Example 4 – Solutions

The magnetic equivalent circuit is drawn as shown in Fig. 29 using the approach described earlier.

Cross-section area $A_c = A_g = 2\text{ cm} \times 2\text{ cm} = 4 \times 10^{-4}\text{ m}^2$

Mean radius $r = (10+12)/2 = 11\text{ cm}$

Length of core $\ell = 2\pi r - 1 = 68.12\text{ cm}$

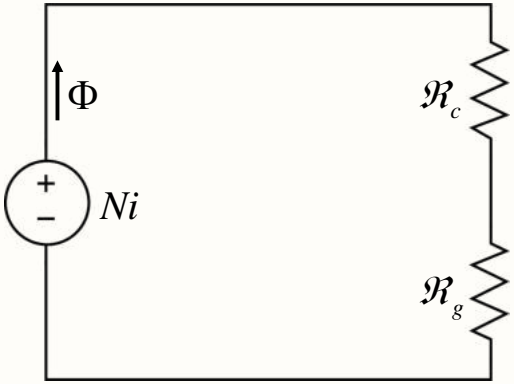

Fig. 29. Magnetic equivalent circuit.

Reproduced with permission from [9789810676575, G. B. Shrestha and M. H. Haque, *AC Circuits and Machines*; Pearson Education South Asia Pte. Ltd.]

Example 4 – Solutions

$$\mathcal{R}_c = \frac{68.12\times10^{-2}}{1200\times4\pi\times10^{-7}\times4\times10^{-4}} = 1.129\times10^{6}\ \mathrm{H}^{-1}$$

$$\mathcal{R}_g = \frac{1\times10^{-2}}{4\pi\times10^{-7}\times4\times10^{-4}} = 19.894\times10^{6}\ \mathrm{H}^{-1}$$

$$\mathcal{R}_{eq} = \mathcal{R}_c + \mathcal{R}_g = 21.023\times10^{6}\ \mathrm{H}^{-1}$$

$$\varphi = (1500\times4)/21.023\times10^{6} = 2.85\times10^{-4}\ \mathrm{Wb}$$

$$B_c = B_g = (2.85\times10^{-4})/(4\times10^{-4}) = 0.713\ \mathrm{T}$$

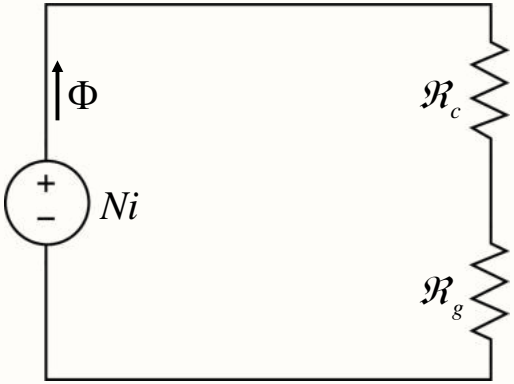

Fig. 29. Magnetic equivalent circuit.

Reproduced with permission from [9789810676575, G. B. Shrestha and M. H. Haque, *AC Circuits and Machines*; Pearson Education South Asia Pte. Ltd.]

Example 4 – Solutions

- It should be noted that even if we ignore the core reluctance in the above calculation, the flux density will not change significantly.
- Core sections in magnetic circuits like conductors in electric circuits. Air gap reluctances are like load resistances in electric circuits. The core reluctances can be ignored in many approximate analyses.

Example 5

The magnetic circuit shown in Fig. 30 has a core area of 2×2 cm^2 and a relative permeability of 1000. The coil has 500 turns and carries a current of 2 A. Find the flux density in each gap.

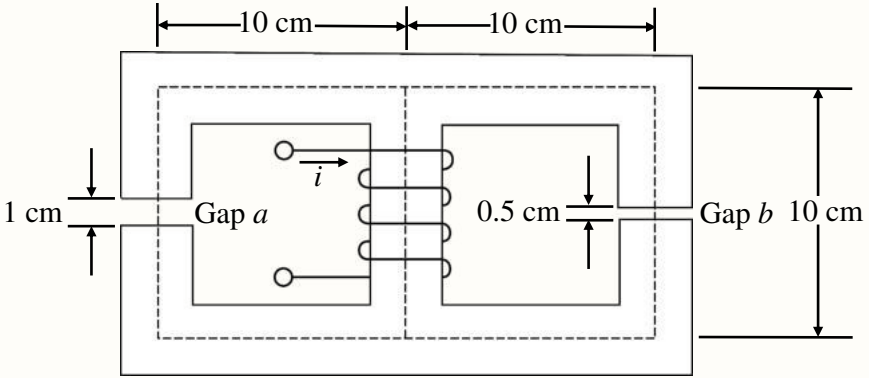

Fig. 30. Magnetic circuit.

Reproduced with permission from [9789810676575, G. B. Shrestha and M. H. Haque, *AC Circuits and Machines*; Pearson Education South Asia Pte. Ltd.]

(Solutions →)

Example 5 – Solutions

The magnetic equivalent circuit can be drawn as shown in Fig. 31 using the approach discussed earlier. The reluctances are computed as follows:

For the centre core:

$$\mathcal{R}_c = \frac{10\times10^{-2}}{1000\times4\pi\times10^{-7}\times4\ \times10^{-4}}\,\mathrm{H}^{-1}$$

$$= 1.989\times10^{5}\ \mathrm{H}^{-1}$$

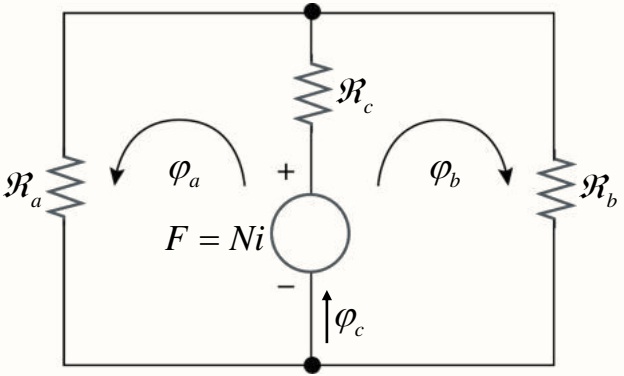

Fig. 31. Magnetic equivalent circuit.

Reproduced with permission from [9789810676575, G. B. Shrestha and M. H. Haque, *AC Circuits and Machines*; Pearson Education South Asia Pte. Ltd.]

Example 5 – Solutions

For the left-hand path:

$$\mathcal{R}_a = \frac{1\times10^{-2}}{4\pi\times10^{-7}\times4\times10^{-4}} + \frac{29\times10^{-2}}{1000\times4\pi\times10^{-7}\times4\times10^{-4}}$$
$$= 204.7\times10^{5}\ \mathrm{H}^{-1}$$

For the right-hand path:

$$\mathcal{R}_b = \frac{0.5\times10^{-2}}{4\pi\times10^{-7}\times4\times10^{-4}} + \frac{29.5\times10^{-2}}{1000\times4\pi\times10^{-7}\times4\times10^{-4}}$$
$$= 104.34\times10^{5}\ \mathrm{H}^{-1}$$

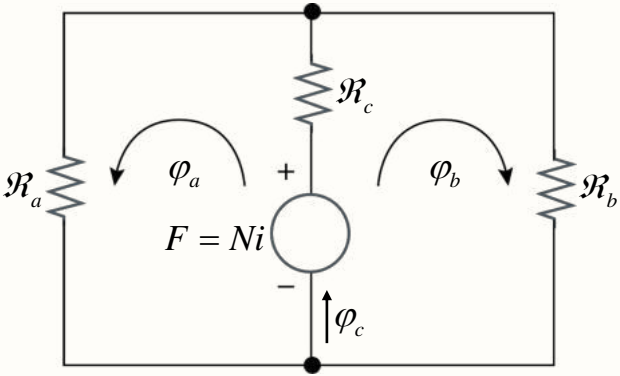

Fig. 31. Magnetic equivalent circuit.

Reproduced with permission from [9789810676575, G. B. Shrestha and M. H. Haque, *AC Circuits and Machines*; Pearson Education South Asia Pte. Ltd.]

Example 5 – Solutions

The magnetic equivalent circuit can be solved like electric circuits. Two common methods to solve the magnetic equivalent circuit are:

Method 1:

a) Write the loop equations:

i. $Ni = \Re_a \varphi_a + \Re_c \varphi_c$ (Apply KVL)

ii. $Ni = \Re_b \varphi_b + \Re_c \varphi_c$ (Apply KVL)

iii. $\varphi_c = \varphi_a + \varphi_b$ (Apply KCL)

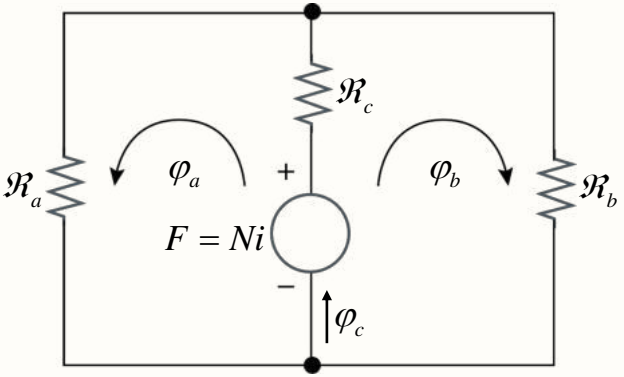

Fig. 31. Magnetic equivalent circuit.

Reproduced with permission from [9789810676575, G. B. Shrestha and M. H. Haque, *AC Circuits and Machines*; Pearson Education South Asia Pte. Ltd.]

Example 5 – Solutions

b) Solve these equations to get the values of $\varphi_a, \varphi_b, \varphi_c$, and then any other quantities of interest.

$$B_a = \frac{\varphi_a}{A_a}, \text{and } B_b = \frac{\varphi_b}{A_b}$$

c) Complete the rest of the problem.

Answers :

$$\varphi_a = 48.4\ \mu\text{Wb},\ \ \varphi_b = 91.4\ \mu\text{Wb}$$

$$B_a = 0.121\,\text{T}, B_b = 0.228\,\text{T}$$

Example 5 – Solutions

Method 2:
Simplify the magnetic equivalent circuit utilising the laws of circuit analysis, e.g., series parallel combinations, etc. In this circuit, it is clear that $\mathcal{R}_a$ and $\mathcal{R}_b$ are in parallel which is then in series with $\mathcal{R}_c$. Therefore, the circuit can be reduced as shown in Fig. 32, where

$$\mathcal{R}_{eq} = (\mathcal{R}_a // \mathcal{R}_b) + \mathcal{R}_c$$

Then,

$$\varphi_c = \frac{Ni}{\mathcal{R}_{eq}}, \varphi_a = \frac{\mathcal{R}_b}{\mathcal{R}_a + \mathcal{R}_b}\varphi_c, \text{and } \varphi_b = \frac{\mathcal{R}_a}{\mathcal{R}_a + \mathcal{R}_b}\varphi_c$$

$$B_a = \varphi_a / A_a, \text{and } B_b = \varphi_b / A_b$$

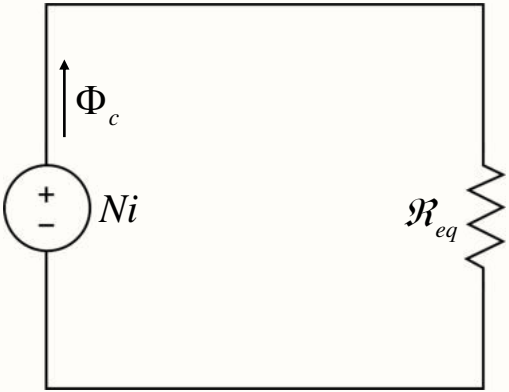

Fig. 32. Magnetic equivalent circuit.

Reproduced with permission from [9789810676575, G. B. Shrestha and M. H. Haque, *AC Circuits and Machines*; Pearson Education South Asia Pte. Ltd.]

Example 5 – Solutions

- A Thevenin equivalent like this can be formed for any magnetic circuit.
- Discussion on further concepts in magnetic circuits will be based on such a simplified circuit, which can easily be applied to more elaborated circuits by reducing these elaborated circuits to their Thevenin equivalents.

Faraday's Law (Induced EMF)

- Consider a magnetic circuit as shown in Fig. 33. Input current i in the coil of N turns establishes a flux φ in the core.
  - **Flux Linkage** (λ):
    When a flux φ passes through a coil of N turns, the flux φ is said to link the coil, and $\lambda = N\varphi$ is called the flux linkage of the coil.

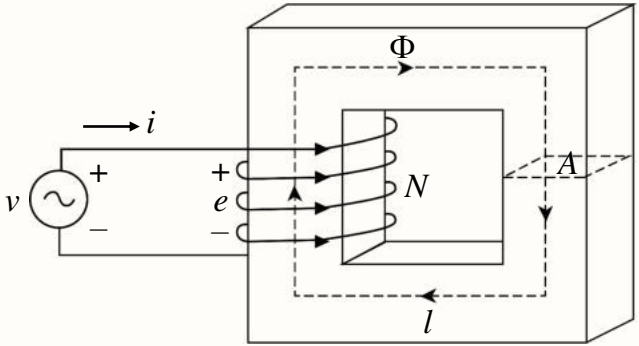

Fig. 33. Magnetic circuit.

Faraday's Law (Induced EMF)

- **Faraday's Law**, which is embedded in the Maxwell's Equations, states that a coil with flux linkage λ will have an induced voltage $\boldsymbol{e}$ in it, given by

$$e = -\frac{d\lambda}{dt} = -N\frac{d\varphi}{dt}$$

The negative sign indicates that the direction of the induced voltage will be such that it will tend to oppose the current i/voltage v creating the flux.

Sinusoidal Excitation of Magnetic Circuits

- When a sinusoidal input current $\boldsymbol{i}$ (due to a sinusoidal voltage v) is provided to a linear magnetic circuit as shown in Fig. 34, the *mmf* ($\boldsymbol{Ni}$) and therefore the flux ($\boldsymbol{Ni/\mathcal{R}}$) produced in the core will also be sinusoidal.

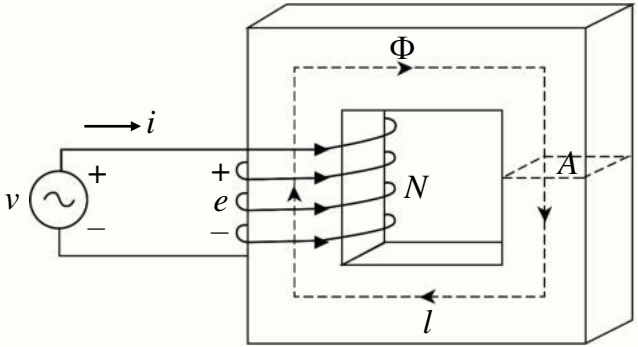

Fig. 34. Magnetic circuit.

Sinusoidal Excitation of Magnetic Circuits

Let $\varphi = \Phi_m \sin \omega t$, then

$$v = e = N\frac{d\Phi}{dt} = N\Phi_m \omega \cos \omega t$$

$$= N(B_m A)(2\pi f)\cos \omega t$$

$$= 2\pi NA(B_m f)\cos \omega t$$

Therefore, the root mean square (rms) value of the voltage is given by

$$V = V_m / \sqrt{2} = 2\pi NA(B_m f)/\sqrt{2} = 4.44NAB_m f$$

- Thus, it is seen that the product $B_m f$ is related to the input voltage, and these two variables are required to be treated jointly in the analysis of many magnetic circuits excited by sinusoidal sources.

Inductance (Self-inductance)

- Consider the magnetic circuit shown in Fig. 35. A current i through the coil will produce a flux φ, and therefore a flux linkage $\lambda = N\varphi$ of the coil.

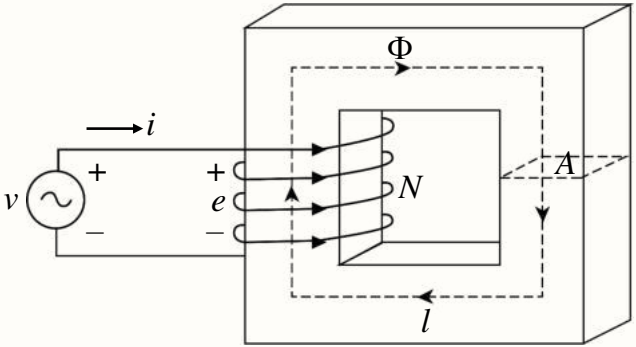

Fig. 35. Magnetic circuit.

Inductance (Self-inductance)

- The inductance of the coil is defined as

$$L = \frac{d\lambda}{dt}, (L = \frac{\lambda}{i} \text{ for linear systems})$$

Since $\lambda = N\varphi = N\frac{Ni}{\mathcal{R}}$, then $L = \frac{\lambda}{i} = \frac{N^2 i}{i\mathcal{R}} = \frac{N^2}{\mathcal{R}}$ H

Thus, the inductance $\boldsymbol{L}$ depends on the coil properties and the physical properties (dimensions) of the magnetic material ($\mathcal{R} = \ell / \mu A$).

- For linear magnetic circuits, reluctance $\mathcal{R}$ is constant, and therefore the inductance $\boldsymbol{L}$ is constant for a given coil.

Inductance (Self-inductance)

- If the magnetic circuit consists entirely of ferro-magnetic material, the B-H curve is hardly linear. Saturation often occurs, $\boldsymbol{\mu}$ and $\mathfrak{R}$ do not remain constant, so that $\boldsymbol{L}$ does not remain constant. If constant inductance $\boldsymbol{L}$ is desired, air gaps are often introduced in the magnetic circuit.

- For a magnetic circuit excited by AC source as shown in Fig. 35, the induced *emf* $\boldsymbol{e}$ can be expressed as

$$e = -\frac{d\lambda}{dt} = -\frac{d\lambda}{di}\frac{di}{dt} = -L\frac{di}{dt}, \text{i.e.,}\ e = -L\frac{di}{dt}$$

This is the common form of Faraday's Law used in electric circuit analysis. Often, the negative sign is dropped by considering the direction of $\boldsymbol{e}$ separately.

Inductance (Self-inductance)

- If the resistance of the coil is negligibly small, then the input voltage $\boldsymbol{v}$ is completely balanced by the induced emf $\boldsymbol{e}$, so that

$$v = e = L\frac{di}{dt}$$

- If the resistance of the coil is considered, then the input voltage is balanced by the drop in the resistance and the induced voltage in the inductor, so that

$$v = ri + L\frac{di}{dt} \Rightarrow V = Ir + IjX = Ir + Ij\omega L = I(r + j\omega L) = IZ$$

Summary

In this lecture, you have learnt:

- The concepts of magnetic circuits with air gaps in various electric machines.
- Simplified magnetic equivalent circuit using the laws of circuit analysis, e.g., series parallel combinations.
- The basic principles of magnetic circuits excited by sinusoidal sources.
- Voltage induced in a magnetic circuit using the Faraday's Law of Electromagnetic Induction.

References

No.	Slide No.	Image	Reference
1	4	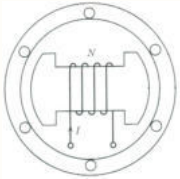	Reprinted from *AC Circuits and Machines*, (p. 90), by G. B. Shrestha, & M. H. Haque, 2006, Singapore: Pearson Education South Asia Pte. Ltd. Copyright 2006 by Pearson Education South Asia Pte. Ltd. Reprinted with permission.
2	5	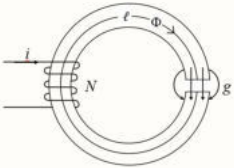	Reprinted from *AC Circuits and Machines*, (p. 101), by G. B. Shrestha, & M. H. Haque, 2006, Singapore: Pearson Education South Asia Pte. Ltd. Copyright 2006 by Pearson Education South Asia Pte. Ltd. Reprinted with permission.
3	6 and 7	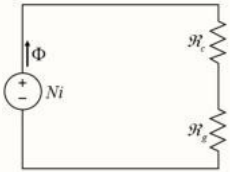	Reprinted from *AC Circuits and Machines*, (p. 101), by G. B. Shrestha, & M. H. Haque, 2006, Singapore: Pearson Education South Asia Pte. Ltd. Copyright 2006 by Pearson Education South Asia Pte. Ltd. Reprinted with permission.

References

No.	Slide No.	Image	Reference
4	9	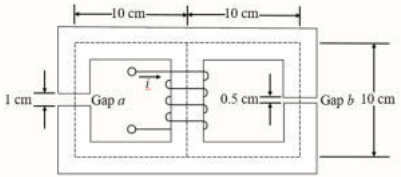	Reprinted from *AC Circuits and Machines*, (p. 103), by G. B. Shrestha, & M. H. Haque, 2006, Singapore: Pearson Education South Asia Pte. Ltd. Copyright 2006 by Pearson Education South Asia Pte Ltd. Reprinted with permission.
5	10, 11 and 12	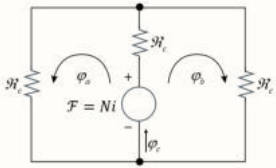	Reprinted from *AC Circuits and Machines*, (p. 103), by G. B. Shrestha, & M. H. Haque, 2006, Singapore: Pearson Education South Asia Pte. Ltd. Copyright 2006 by Pearson Education South Asia Pte. Ltd. Reprinted with permission.
6	14	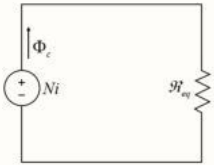	Reprinted from *AC Circuits and Machines*, (p. 99), by G. B. Shrestha, & M. H. Haque, 2006, Singapore: Pearson Education South Asia Pte. Ltd. Copyright 2006 by Pearson Education South Asia Pte. Ltd. Reprinted with permission.

References

No.	Slide No.	Image	Reference
7	16, 18 and 20	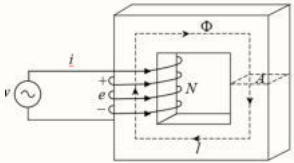	Reprinted from *Electric Machinery and Transformers, 3rd ed.*, (p. 147), by B. S. Guru, & H. R. Hiziroglu, 2001, New York, NY: Oxford University Press. Copyright 2001 by Oxford University Press.

Lecture 4: Electromagnetic Principles and Actuators

EE3010: Electrical Devices and Machines

School of Electrical and Electronic Engineering

Associate Professor So Ping Lam
Tel: +65 6790 5026 | Email: eplso@ntu.edu.sg

Disclaimer

The preceding/ following videos contain slides with materials that were originally used for delivery in lecture halls and/or classrooms in Nanyang Technological University. They might contain adapted materials. While every effort has been made to undertake due diligence to identify the original source, this was not always possible for all materials. The videos are used solely for educational purposes to support the Technology-Enhanced Learning (TEL) aspects of the course. TEL is hosted and deployed in NTULearn and i-NTULearn, a learning management system accessed by students at NTU assigned with a user ID and password. This disclaimer states that no copyright infringement was intended. Should any disagreement or dispute arise, including any claims to rightful ownership, kindly contact CITS, NTU, at +65 6790 5231.

Learning Objectives

By the end of this lecture, you should be able to:

- Perform design and analysis of magnetic circuits excited by AC and DC sources.
- Describe the use of magnetic field as a medium to store electrical energy.
- Evaluate the magnetic field energy using different approaches.

Example 6

The circular magnetic core shown in Fig. 36 has a relative permeability of 2200. The dimensions of the core are: r_1 = 25 cm, r_2 = 20 cm, and the cross section A is circular. The coil has 102 turns and a resistance of 4 Ω.

Calculate the inductance of the coil. What will be the flux density in the core and the flux linkage of the coil if it is connected to (a) 10 V dc source, and (b) 10 V, 50 Hz ac source?

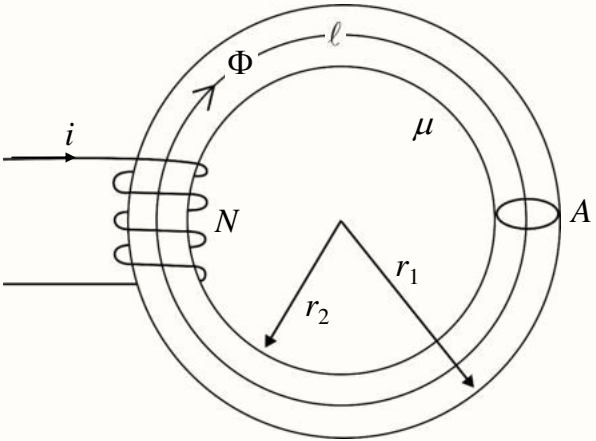

Fig. 36. Circular magnetic core.

Reproduced with permission from [9789810676575, G. B. Shrestha and M. H. Haque, AC Circuits and Machines; Pearson Education South Asia Pte. Ltd.]

(Solutions →)

Example 6 – Solutions

Mean radius $r = \left(\frac{25+20}{2}\right) \times 10^{-2} = 0.225 \text{ m}$

Diameter of core section = $r_1 - r_2 = 5 \text{ cm} = 0.05 \text{ m}$

⇒ Cross section area $A = \pi r^2 = \pi 0.025^2 \text{ m}^2$

Reluctance of core:

$$\mathcal{R} = \frac{\ell}{\mu A} = \frac{2\pi \times 0.225}{2200 \times 4\pi \times 10^{-7} \times \pi 0.025^2} = 260435 \text{ H}^{-1}$$

The magnetic equivalent circuit is shown in Fig. 37.

Inductance $L = \frac{N^2}{\mathcal{R}} = \frac{102^2}{260435} = 0.04 \text{ H}$

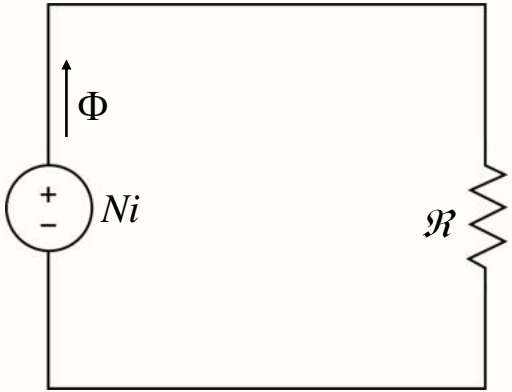

Fig. 37. Magnetic equivalent circuit.

Reproduced with permission from [9789810676575, G. B. Shrestha and M. H. Haque, AC Circuits and Machines; Pearson Education South Asia Pte. Ltd.]

Example 6 – Solutions

a) When connected to 10 V dc, the electric circuit is shown in Fig. 38, where

$$i = V / R = 10 / 4 = 2.5 \text{ A}$$

Then,

flux $\varphi = Ni / \mathcal{R} = 102 \times 2.5 / 260435 = 9.79 \times 10^{-4} \text{ Wb}$

$$B = \varphi / A = 9.79 \times 10^{-4} / (\pi 0.025^2) = 0.50 \text{ T}$$

$$\lambda = N\varphi = 102 \times 9.79 \times 10^{-4} = 0.10 \text{ Wb t}$$

(Check: $L = \lambda / i = 0.10 / 2.5 = 0.04 \text{ H}$)

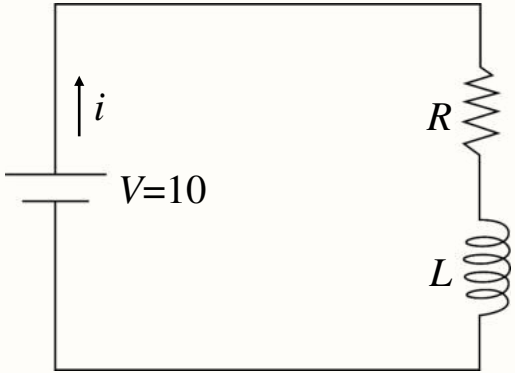

Fig. 38. Electric equivalent circuit.

Reproduced with permission from [9789810676575, G. B. Shrestha and M. H. Haque, AC Circuits and Machines; Pearson Education South Asia Pte. Ltd.]

Example 6 – Solutions

b) When connected to 10 V ac, 50 Hz, the electric circuit is shown in Fig. 39, where

$$Z = R + j\omega L = 4 + j2\pi fL = 4 + j2\pi 50 \times 0.04$$

$$= 4 + j12.57 = 13.19\angle 72.3^\circ\ \Omega$$

so that $I = V / Z = 10 / 13.19 = 0.758\ \text{A}$

Then,

flux $\varphi = NI / \mathcal{R} = 102 \times 0.758 / 260435 = 2.97 \times 10^{-4}\ \text{Wb}$

$$B = \varphi / A = 2.97 \times 10^{-4} / (\pi 0.025^2) = 0.15\ \text{T}$$

$$\lambda = N\varphi = 102 \times 2.97 \times 10^{-4} = 0.0303\ \text{Wb t}$$

(Check: $L = \lambda / i = 0.0303 / 0.758 = 0.04\ \text{H}$)

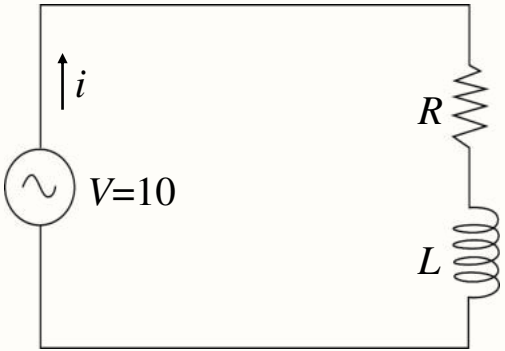

Fig. 39. Electric equivalent circuit.

Reproduced with permission from [9789810676575, G. B. Shrestha and M. H. Haque, AC Circuits and Machines; Pearson Education South Asia Pte. Ltd.]

Magnetic Field Energy (Magnetic Stored Energy)

- Consider a lossless magnetic circuit as shown in Fig. 40. If the current input is i at a voltage of v, electrical energy input in time interval $\boldsymbol{dt}$ is

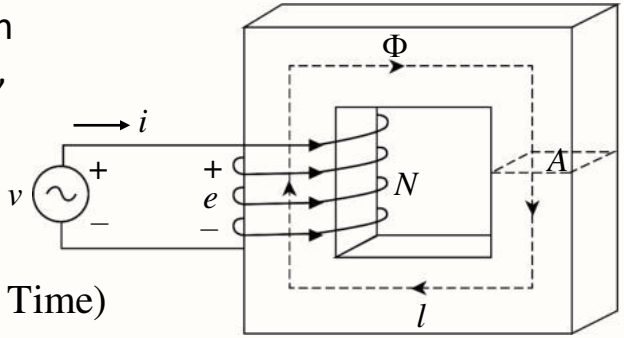

Fig. 40. Lossless magnetic circuit.

$$dW_i = vi\,dt = -ei\,dt \quad \text{(Energy = kWh = Power x Time)}$$

But $e = -\dfrac{d\lambda}{dt}$, $\Rightarrow -e\,dt = d\lambda$

and $\lambda = N\varphi \;\Rightarrow d\lambda = Nd\varphi$

Hence, $dW_i = -ei\,dt = -ie\,dt = i\,d\,\lambda = Ni\,d\varphi$

Magnetic Field Energy (Magnetic Stored Energy)

Therefore, energy input to establish flux φ in N-turn coil is

$$W_i = \int i\, d\,\lambda = \int Ni\, d\varphi$$

This expression can be used to calculate the total electrical energy input to a magnetic system.

Magnetic Field Energy (Magnetic Stored Energy)

- In a lossless system, since there is no output, the input energy will be stored as magnetic field energy (W_f or W_m). Therefore,

$$W_f = \int i\, d\lambda = \int Ni\, d\varphi$$

- Noting that $Ni = \varphi \mathfrak{R}$ for linear circuits, the field energy may be evaluated as

$$W_f = \int Ni\, d\varphi = \int \varphi \mathfrak{R}\, d\varphi = \frac{1}{2}\varphi^2 \mathfrak{R} \;\left(= \frac{1}{2} Ni\varphi = \frac{1}{2}\lambda i\right)$$

Magnetic Field Energy (Magnetic Stored Energy)

- Further, if we note that $L = \frac{\lambda}{i} = \frac{N\varphi}{i} \Rightarrow N\varphi = iL$, the stored energy can be written as

$$W_f = \frac{1}{2} N\varphi i = \frac{1}{2} i^2 L$$

  - It should be noted that these expressions for stored magnetic field energy are for linear systems only, since we assume constant reluctance $\mathcal{R}$.
  - For nonlinear magnetic circuits, proper integration must be carried out to evaluate the stored energy.

Energy Density

- The stored magnetic field energy (W_f or W_m) has been expressed as

$$W_f = \int i\, d\lambda = \int Ni\, d\varphi$$

Noting that $Ni = H\ell$ and $\varphi = BA$, so that $d\varphi = A\,dB$, the field energy can also be written as

$$W_f = A\ell \int H\,dB$$

- Note that $A\ell$ is the volume of the magnetic material and $W_f / (A\ell)$ is the energy per unit volume. Therefore,

$\dfrac{W_f}{A\ell} = \int H\,dB$ is called the energy density, usually denoted as $\boldsymbol{w}$.

Energy Density

- Noting further that $B = \mu H \Rightarrow H = B/\mu$, the energy density is evaluated as

$$w_i = \int H\,dB = \int (B/\mu)\,dB = \frac{B^2}{2\mu}\ \mathrm{J/m^3} = \frac{1}{2}HB\ \mathrm{J/m^3}$$

for a linear magnetic circuit, where μ remains constant.

Example 7

For the magnetic circuit of Example 6, calculate the magnetic field energy stored when connected to 10 V dc using different approaches.

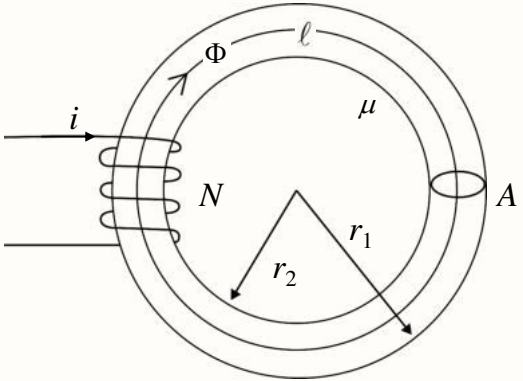

Fig. 41. Circular magnetic core.

Reproduced with permission from [9789810676575, G. B. Shrestha and M. H. Haque, AC Circuits and Machines; Pearson Education South Asia Pte. Ltd.]

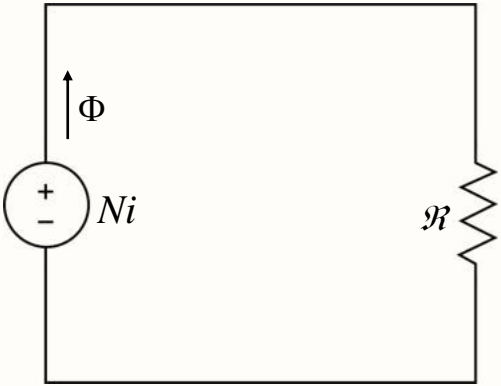

Fig. 42. Magnetic equivalent circuit.

Reproduced with permission from [9789810676575, G. B. Shrestha and M. H. Haque, AC Circuits and Machines; Pearson Education South Asia Pte. Ltd.]

(Solutions →)

Example 7 – Solutions

From Example 6,

$\mathcal{R} = 260435\ \mathrm{H}^{-1}$, and $L = 0.04\ \mathrm{H}$

With 10 V dc source,

$i = 2.5\ \mathrm{A}, \varphi = 9.79 \times 10^{-4}\ \mathrm{Wb}$

$B = 0.50\ \mathrm{T}, \lambda = 0.10\ \mathrm{Wb\ t}$

Then, $W_f = \frac{1}{2}\varphi^2 \mathcal{R} = \frac{1}{2}(9.79 \times 10^{-4})^2 \times 260435 = 0.125\ \mathrm{J}$, or

$$W_f = \frac{1}{2} i^2 L = \frac{1}{2}(2.5)^2 \times 0.04 = 0.125\ \mathrm{J}$$

(You can also try other energy equations discussed above, say $w_i = \frac{B^2}{2\mu}$, etc.)

Summary

In this lecture, you have learnt:

- Design and analysis of magnetic circuits excited by AC and DC sources.
- Use of magnetic field as a medium to store electrical energy.
- Evaluation of magnetic field energy using different approaches.

References

No.	Slide No.	Image	Reference
1	4 and 14	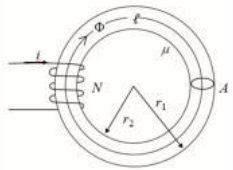	Reprinted from *AC Circuits and Machines*, (p. 108), by G. B. Shrestha, & M. H. Haque, 2006, Singapore: Pearson Education South Asia Pte. Ltd. Copyright 2006 by Pearson Education South Asia Pte. Ltd. Reprinted with permission.
2	5 and 14	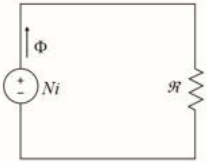	Reprinted from *AC Circuits and Machines*, (p. 105), by G. B. Shrestha, & M. H. Haque, 2006, Singapore: Pearson Education South Asia Pte. Ltd. Copyright 2006 by Pearson Education South Asia Pte. Ltd. Reprinted with permission.
3	6	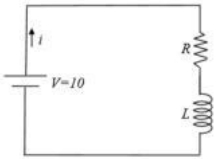	Reprinted from *AC Circuits and Machines*, (p. 109), by G. B. Shrestha, & M. H. Haque, 2006, Singapore: Pearson Education South Asia Pte. Ltd. Copyright 2006 by Pearson Education South Asia Pte. Ltd. Reprinted with permission.

References

No.	Slide No.	Image	Reference
4	7	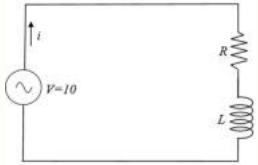	Reprinted from *AC Circuits and Machines*, (p. 109), by G. B. Shrestha, & M. H. Haque, 2006, Singapore: Pearson Education South Asia Pte. Ltd. Copyright 2006 by Pearson Education South Asia Pte. Ltd. Reprinted with permission.
5	8	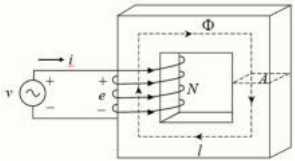	Reprinted from *Electric Machinery and Transformers, 3rd ed.*, (p. 147), by B. S. Guru, & H. R. Hiziroglu, 2001, New York, NY: Oxford University Press. Copyright 2001 by Oxford University Press.

Lecture 5: Electromagnetic Principles and Actuators

EE3010: Electrical Devices and Machines

School of Electrical and Electronic Engineering

Associate Professor So Ping Lam
Tel: +65 6790 5026 | Email: eplso@ntu.edu.sg

Disclaimer

The preceding/ following videos contain slides with materials that were originally used for delivery in lecture halls and/ or classrooms in Nanyang Technological University. They might contain adapted materials. While every effort has been made to undertake due diligence to identify the original source, this was not always possible for all materials. The videos are used solely for educational purposes to support the Technology-Enhanced Learning (TEL) aspects of the course. TEL is hosted and deployed in NTULearn and i-NTULearn, a learning management system accessed by students at NTU assigned with a user ID and password. This disclaimer states that no copyright infringement was intended. Should any disagreement or dispute arise, including any claims to rightful ownership, kindly contact CITS, NTU, at +65 6790 5231.

Learning Objectives

By the end of this lecture, you should be able to:

- Employ the concepts learnt in hysteresis loop to explain the basics of core losses which consist of hysteresis loss and eddy current loss.
- Describe the principles of using laminations of high resistivity core material to reduce eddy current loss.
- Apply voltage equations to solve simple hysteresis loss and eddy current loss problems.

Magnetisation Curve (Revisit)

- When the field strength H in a magnetic circuit shown in Fig. 43 is increased by increasing the current through the coil, the flux density increases as shown in Fig. 44.

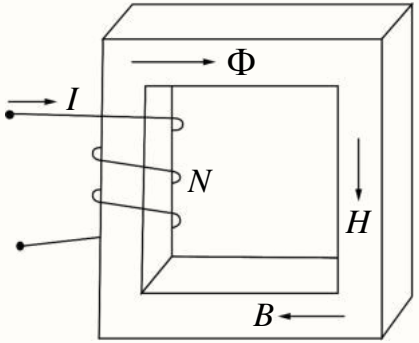

Fig. 43. Magnetic circuit.

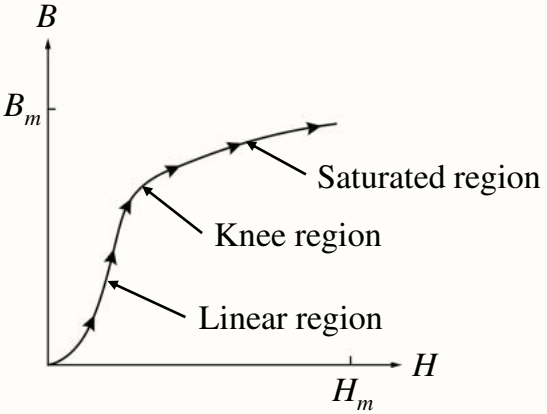

Fig. 44. Magnetisation curve.

Magnetisation Curve (Revisit)

- If the field strength H is now reduced by decreasing the current through the coil, the decrease in flux density does not follow the path as shown in Fig. 45. In fact, the core has retained some flux density when the current and therefore the field strength H is reduced to zero. This is called the remanence or the residual flux density B_r.

- A current flow in the opposite direction, i.e., a negative field strength H is required to reduce the flux density to zero, known as coercive force H_c.

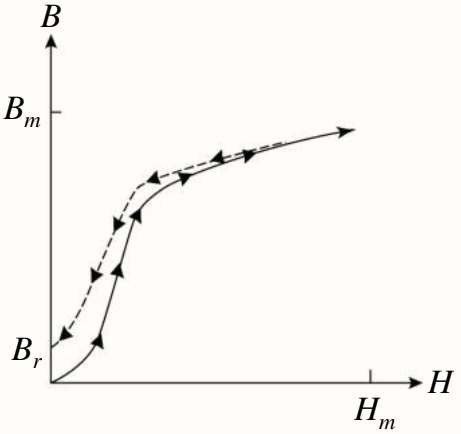

Fig. 45. Magnetisation curve.

Hysteresis Loop

- If a magnetic circuit is excited by ac source as shown in Fig. 46, the input current and therefore the field strength follows a cycle:
  - Increasing slowly to a maximum value (H_m)
  - Decreasing slowly to zero
  - Reversing the direction and increasing to a maximum value in the reverse direction ($-H_m$)
  - Finally, reversing the direction to track back to a maximum positive value (H_m)

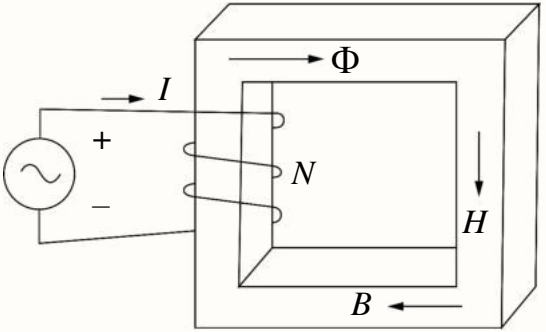

Fig. 46. Magnetic circuit.

Hysteresis Loop

- The path traced by the B-H curve for such a cycle shown Fig. 47 is called **Hysteresis Loop**.
- The actual shape of the hysteresis loop depends on the magnetic material.

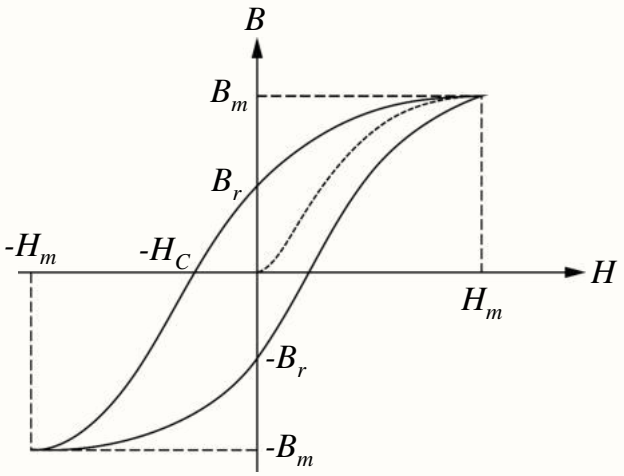

Fig. 47. Hysteresis loop.

Magnetic Losses

- **Magnetic losses**, also called **'core losses'** or '**iron losses'**, consist of **Hysteresis Loss** and **Eddy Current Loss**.
- **Hysteresis Loss** For magnetic circuits excited by ac sources, the flux density in the core traverses a complete hysteresis loop for each cycle of the input current. This process incurs a power loss in the core known as **'Hysteresis Loss'**. Hysteresis loss $\boldsymbol{P_h}$ is commonly estimated using empirical formula proposed by Steinmetz.

$$P_h = K_h B_m{}^n f \ \mathrm{W}$$

where

B_m is the maximum flux density in the magnetic core,

f is the frequency of the source,

K_h is a constant, and

n is the Steinmetz index (1.5 ~ 2.5 for common core materials).

Eddy Current Loss

- **Eddy Current Loss**: When a time varying flux is created in a solid magnetic core as shown in Fig. 48, it will produce induced voltage in any perceivable closed path. The direction of these "Eddy" currents will be such that they tend to oppose the original flux.

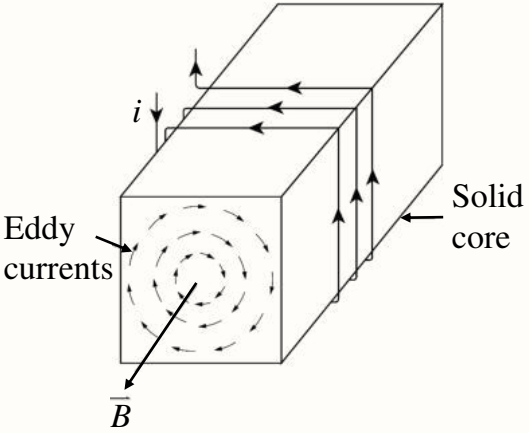

Fig. 48. Solid magnetic core.

Eddy Current Loss

- The eddy currents flowing in these closed paths incur power losses, which are called **'Eddy Current Losses'**. The magnitude of the 'Eddy Current' and therefore the 'Eddy Current Loss' will depend on:
  - The magnitude of the induced voltage in each closed path
  - The resistance of such closed paths

  Therefore, it is very difficult to quantify eddy current losses.

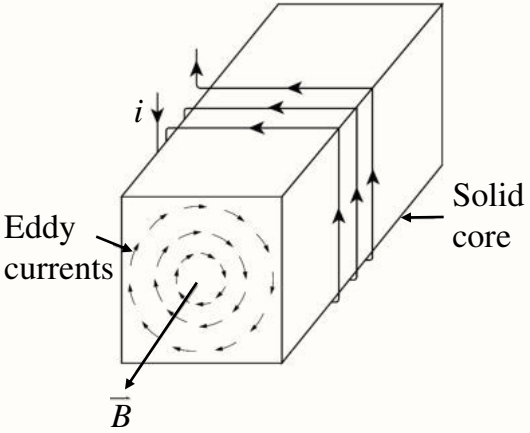

Fig. 48. Solid magnetic core.

Eddy Current Loss

- Eddy current loss $\boldsymbol{P_e}$ in a magnetic circuit excited by a sinusoidal source is commonly estimated using the empirical formula:

$$P_e = K_e B_m{}^2 f^2 \text{ W}$$

where

B_m is the maximum flux density in the magnetic core,

f is the frequency of the source, and

K_e is a constant.

Eddy Current Loss

- Eddy currents and therefore eddy current losses are reduced by using laminations of high resistivity core material as shown in Fig. 49, instead of solid core material. This increases
  - The effective length of eddy current paths
  - The resistance of these eddy current paths
- Reduced 'Eddy Currents' lead to reduced 'Eddy Current Losses'.

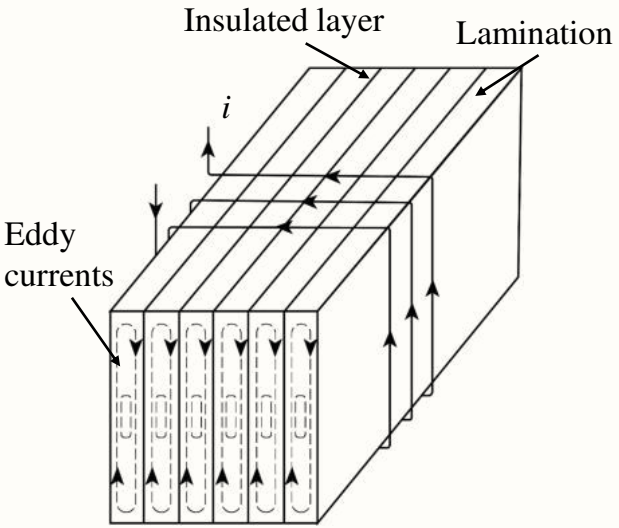

Fig. 49. Laminated magnetic core.

Sinusoidal Excitation of Magnetic Circuits (Revisit)

- Both **Hysteresis Loss** as well as **Eddy Current Loss** depend on f and B_m. It should be noted that these two variables are not fully independent.
- For a magnetic circuit excited by a sinusoidal input as shown in Fig. 50, it was shown earlier that

  $$V = V_m / \sqrt{2} = 2\pi NA(B_m f) / \sqrt{2} = 4.44NA(B_m f)$$

  is called **Voltage Equation**.
- Thus, it is seen that the product $B_m f$ is jointly related to the input voltage, and these two variables cannot vary independently for a given input voltage.

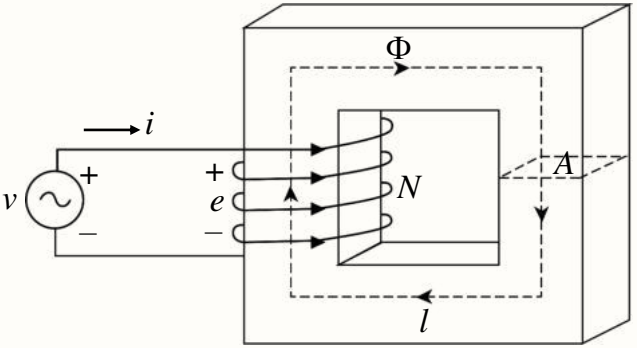

Fig. 50. Magnetic circuit.

Example 8

An electromagnet is known to have hysteresis loss of 80 W when excited by a 120 V, 60 Hz source. If the Steinmetz index of the core material is 1.6, estimate the hysteresis loss when the electromagnet is connected to a 120 V, 50 Hz source.

(Solutions →)

Example 8 – Solutions

Let B_{m1} and B_{m2} be the maximum flux densities under the two conditions.

Then, $P_{h1} = K_h B_{m1}^{1.6} f_1$, and $P_{h2} = K_h B_{m2}^{1.6} f_2 = ?$

Therefore, $\dfrac{P_{h2}}{P_{h1}} = \dfrac{B_{m2}^{1.6}}{B_{m1}^{1.6}} \dfrac{f_2}{f_1}$, and $P_{h1} = 80\ \text{W}$, $f_1 = 60\ \text{Hz}$ and $f_2 = 50\ \text{Hz}$

The voltage equations under the two conditions yield,

$V_1 = 120\ \text{V} = KB_{m1} f_1$, and $V_2 = 120\ \text{V} = KB_{m2} f_2$

$\Rightarrow B_{m1} f_1 = B_{m2} f_2 \Rightarrow B_{m2} / B_{m1} = f_1 / f_2 = 60/50 = 1.2$

Therefore, $P_{h2} = \dfrac{B_{m2}^{1.6}}{B_{m1}^{1.6}} \dfrac{f_2}{f_1} P_{h1} = 1.2^{1.6} \times \dfrac{50}{60} \times 80 = 89.25\ \text{W}$

Summary

In this lecture, you have learnt:

- Concepts of hysteresis loop to explain the basics of core losses which consist of hysteresis loss and eddy current loss.
- Principles of using laminations of high resistivity core material to reduce eddy current loss.
- Application of voltage equations to solve simple hysteresis loss and eddy current loss problems.

References

No.	Slide No.	Image	Reference
1	4	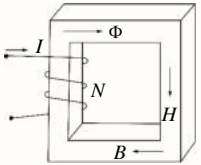	Reprinted from *Electric Machinery and Transformers, 3rd ed.*, (p. 79), by B. S. Guru, & H. R. Hiziroglu, 2001, New York, NY: Oxford University Press. Copyright 2001 by Oxford University Press. Reprinted with permission.
2	4	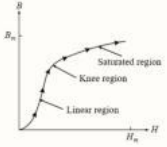	Reprinted from *Electric Machinery and Transformers, 3rd ed.*, (p. 80), by B. S. Guru, & H. R. Hiziroglu, 2001, New York, NY: Oxford University Press. Copyright 2001 by Oxford University Press. Reprinted with permission.
3	5	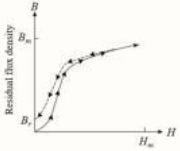	Reprinted from *Electric Machinery and Transformers, 3rd ed.*, (p. 80), by B. S. Guru, & H. R. Hiziroglu, 2001, New York, NY: Oxford University Press. Copyright 2001 by Oxford University Press. Reprinted with permission.

References

No.	Slide No.	Image	Reference
4	6	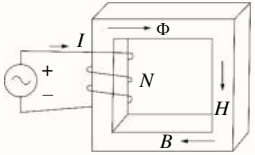	Reprinted from *Electric Machinery and Transformers, 3rd ed.*, (p. 79), by B. S. Guru, & H. R. Hiziroglu, 2001, New York, NY: Oxford University Press. Copyright 2001 by Oxford University Press.
5	7	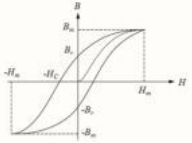	Reprinted from *Electric Machinery and Transformers, 3rd ed.*, (p. 8), by B. S. Guru, & H. R. Hiziroglu, 2001, New York, NY: Oxford University Press. Copyright 2001 by Oxford University Press.
6	9 and 10	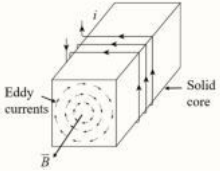	Reprinted from *Electric Machinery and Transformers, 3rd ed.*, (p. 110), by B. S. Guru, & H. R. Hiziroglu, 2001, New York, NY: Oxford University Press. Copyright 2001 by Oxford University Press.

References

No.	Slide No.	Image	Reference
7	12	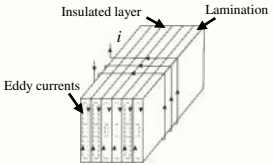	Reprinted from *Electric Machinery and Transformers, 3rd ed.*, (p. 110), by B. S. Guru, & H. R. Hiziroglu, 2001, New York, NY: Oxford University Press. Copyright 2001 by Oxford University Press.
8	13	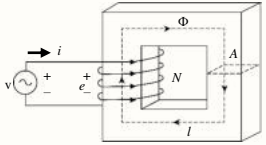	Reprinted from *Electric Machinery and Transformers, 3rd ed.*, (p. 147), by B. S. Guru, & H. R. Hiziroglu, 2001, New York, NY: Oxford University Press. Copyright 2001 by Oxford University Press.

Lecture 6: Electromagnetic Principles and Actuators

EE3010: Electrical Devices and Machines

School of Electrical and Electronic Engineering

Associate Professor So Ping Lam
Tel: +65 6790 5026 | Email: eplso@ntu.edu.sg

Disclaimer

The preceding/ following videos contain slides with materials that were originally used for delivery in lecture halls and/ or classrooms in Nanyang Technological University. They might contain adapted materials. While every effort has been made to undertake due diligence to identify the original source, this was not always possible for all materials. The videos are used solely for educational purposes to support the Technology-Enhanced Learning (TEL) aspects of the course. TEL is hosted and deployed in NTULearn and i-NTULearn, a learning management system accessed by students at NTU assigned with a user ID and password. This disclaimer states that no copyright infringement was intended. Should any disagreement or dispute arise, including any claims to rightful ownership, kindly contact CITS, NTU, at +65 6790 5231.

Learning Objectives

By the end of this lecture, you should be able to:

- Describe the principles of electromechanical energy conversion and the operations of electromechanical devices, i.e., convert electrical energy into mechanical energy and vice versa.
- Apply the Law of Conservation of Energy to establish the energy balance equation.
- Employ differential calculus to derive the incremental analysis equation.
- Apply Constant Flux and Constant Current methods to evaluate the magnetic force with respect to the magnetic field energy.

Principles of Electromechanical Energy Conversion

- Electromechanical devices (e.g., machines) convert electrical energy into mechanical energy and vice versa. Most of these devices utilise magnetic field as a medium.

- Conservation of energy has to be satisfied by all these processes.

$$W_i = W_o + W_f + W_\ell$$

where
W_i is the input (electrical) energy,
W_o is the output (mechanical) energy,
W_f is the field or stored energy, and
W_ℓ is the energy lost in the system.

Principles of Electromechanical Energy Conversion

- The flow of energy in the process is shown in Fig. 51. This process is reversible except for the losses.

- Ignoring losses, the energy balance equation is reduced to

$$W_i = W_o + W_f$$

- Incremental analysis between two states gives

$$dW_i = dW_o + dW_f$$

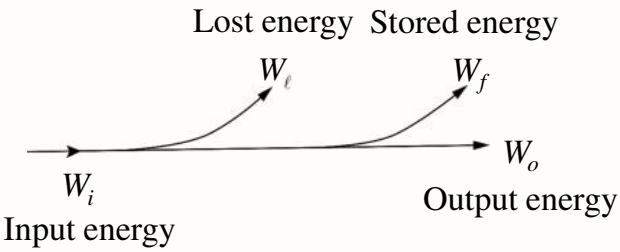

Fig. 51. Energy flow diagram.

Production of Force

- Consider an electromagnetic system with one fixed and one movable part separated by a gap x as shown in Fig. 52.
- If the total reluctance is $\mathcal{R}_1$, the flux in the structure for an input current i is given by

$$\varphi = \frac{Ni}{\mathcal{R}_1}$$

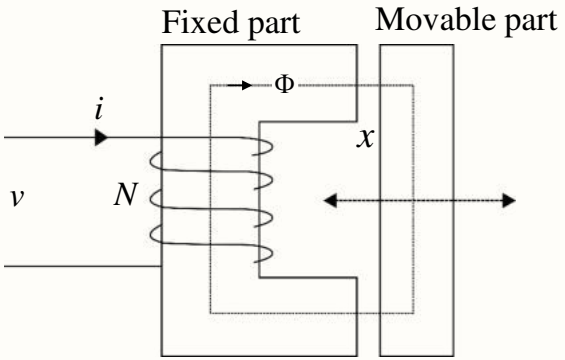

Fig. 52. Electromagnetic system.

Reproduced with permission from [9789810676575, G. B. Shrestha and M. H. Haque, *AC Circuits and Machines*; Pearson Education South Asia Pte. Ltd.]

Production of Force

- The relationship between Ni and φ is a straight line (1) with slope $1/\mathcal{R}_1$ as shown in Fig. 53. If the system is operating at point $\boldsymbol{p_1}$ with input current i_1 and flux φ_1, the field energy is

$$W_f = \frac{1}{2} N i_1 \varphi_1$$

which is the area indicated in the diagram.

- Let the force experienced by the movable part at a gap distance of $\boldsymbol{x}$ be F_m, and it moves towards the fixed part by an incremental distance of $\boldsymbol{dx}$. The incremental energy output is $dW_o = F_m dx$.

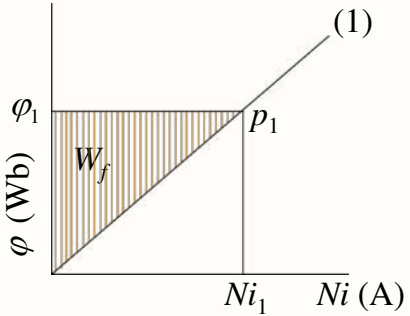

Fig. 53. Field energy diagram.

Reproduced with permission from [9789810676575, G. B. Shrestha and M. H. Haque, *AC Circuits and Machines*; Pearson Education South Asia Pte. Ltd.]

Production of Force

- In this process, since the air gap has decreased, the reluctance should be reduced to, say $\mathcal{R}_2$, ($\mathcal{R}_2 < \mathcal{R}_1$) and the relationship between the flux and the mmf is given by

$$\varphi = \frac{Ni}{\mathcal{R}_2}$$

which is a straight line with slope $1/\mathcal{R}_2$ and can be represented by the line (2) in Fig. 54.

- The operating point has to move from p_1 to somewhere in line (2). Consequently, there will be changes in various energy components: input energy and stored energy.

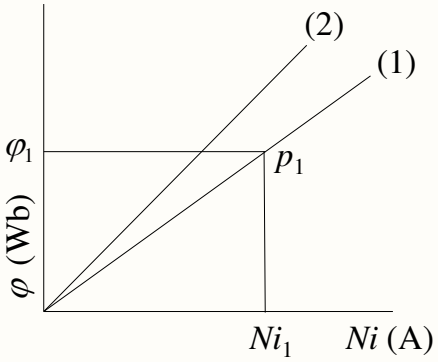

Fig. 54. Field energy diagram.

Reproduced with permission from [9789810676575, G. B. Shrestha and M. H. Haque, *AC Circuits and Machines*; Pearson Education South Asia Pte. Ltd.]

Production of Force

- Incremental analysis of the various energy components in this process gives

$$dW_i = dW_o + dW_f \Rightarrow dW_0 = dW_i - dW_f$$
$$\Rightarrow F_m dx = dW_i - dW_f$$

- This relationship can be used to derive the expression for the force F_m by evaluating the energy components dW_i and dW_f corresponding to the new operating point in line (2). This will be done for two different processes.

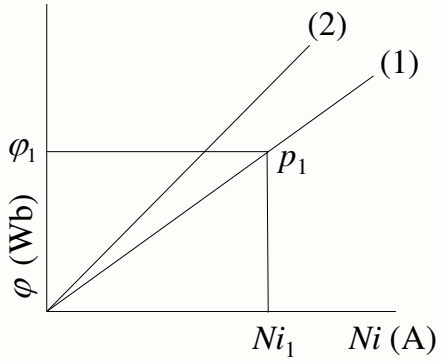

Fig. 54. Field energy diagram.

Reproduced with permission from [9789810676575, G. B. Shrestha and M. H. Haque, *AC Circuits and Machines*; Pearson Education South Asia Pte. Ltd.]

Method 1 – Constant Flux

- If the flux φ is held constant while the movable part moves a distance dx under the force F_m, the operating point changes from p_1 to p_2 (see Fig. 55) Then,

  $$dW_i = id\lambda = Nid\varphi = Ni(\varphi_2 - \varphi_1) = 0$$

  ($\varphi_2 = \varphi_1$ since the flux is held constant.)

  Therefore, $F_m dx = dW_i - dW_f = -dW_f$

  $$\Rightarrow F_m = -\frac{dW_f}{dx}$$

- The force developed is proportional to the rate of decrement of the stored energy.

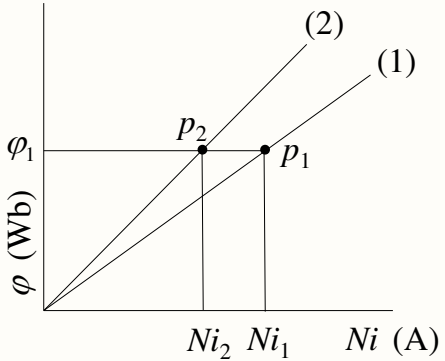

Fig. 55. Field energy diagram.

Reproduced with permission from [9789810676575, G. B. Shrestha and M. H. Haque, *AC Circuits and Machines*; Pearson Education South Asia Pte. Ltd.]

Method 2 – Constant Current

- If the input current is held constant during the process, the operating point moves from p_1 to p_3 and the flux changes from φ_1 to φ_2 in Fig. 56, so that

  $d\varphi = \varphi_2 - \varphi_1$

  Under this condition,

  a) $dW_i = id\lambda = Ni_1 d\varphi = Ni_1(\varphi_2 - \varphi_1)$

  b) $dW_f = W_{f2} - W_{f1} = \frac{1}{2}Ni_1\varphi_2 - \frac{1}{2}Ni_1\varphi_1$

  $$= \frac{1}{2}Ni_1(\varphi_2 - \varphi_1) = \frac{1}{2}dW_i$$

  Thus, $dW_i = 2dW_f$

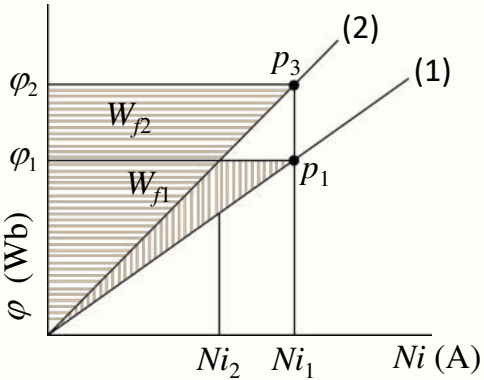

Fig. 56. Field energy diagram.

Reproduced with permission from [9789810676575, G. B. Shrestha and M. H. Haque, *AC Circuits and Machines*; Pearson Education South Asia Pte. Ltd.]

Method 2 – Constant Current

Therefore,

$$F_m dx = dW_i - dW_f = 2dW_f - dW_f = dW_f$$

and, $F_m = \dfrac{dW_f}{dx}$

Thus, the force developed is proportional to the rate of increment of the stored energy.

Constant Flux and Constant Current

- In both the cases, the evaluation of force F_m requires the expression for the magnetic field energy W_f, which may be a function of either
  - flux $\boldsymbol{\varphi}$ and gap distance $\boldsymbol{x}$, or
  - current $\boldsymbol{i}$ and gap distance $\boldsymbol{x}$.
- When the flux is held constant, $F_m = -\dfrac{dW_f}{dx} = -\dfrac{\partial W_f(\varphi, x)}{\partial x}$

  Since $W_f = \dfrac{1}{2}\varphi^2 \mathfrak{R}$, this approach usually takes the form,

$$F_m = -\frac{dW_f}{dx} = -\frac{\partial W_f(\varphi, x)}{\partial x} = -\frac{\partial\left[\frac{1}{2}\varphi^2 \mathfrak{R}(x)\right]}{\partial x} = -\frac{1}{2}\varphi^2 \frac{d\mathfrak{R}(x)}{dx}$$

Constant Flux and Constant Current

- When the current is held constant,

$$F_m = \frac{dW_f}{dx} = \frac{\partial W_f(i,x)}{\partial x}$$

Since $W_f = \frac{1}{2} i^2 L$, this approach usually takes the form,

$$F_m = \frac{dW_f}{dx} = \frac{\partial W_f(i,x)}{\partial x} = \frac{\partial\left[\frac{1}{2} i^2 L(x)\right]}{\partial x} = -\frac{1}{2} i^2 \frac{dL(x)}{dx}$$

Example 9

Determine the minimum amount of current required to keep the magnetic plate at a distance of 1 mm from the pole faces of the fixed electromagnet having 1000 turns when the force exerted by the spring is 100 N as shown in Fig. 57. Each pole face cross-sectional area is 9 cm^2. Ignore the reluctances of the core material and magnetic plate.

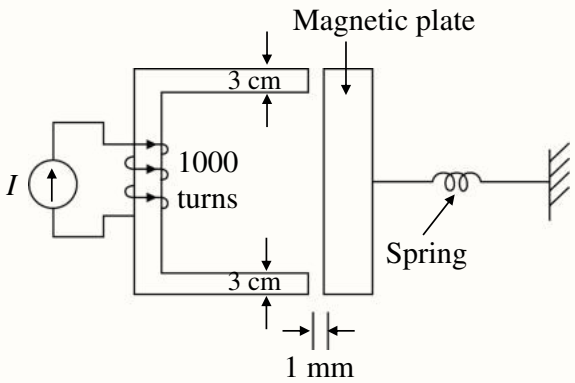

Fig. 57. Electromagnet System.

(Solutions →)

Example 9 – Solutions

The magnetic equivalent circuit can be drawn as shown in Fig. 58. For a gap x, the total reluctance is

$$\mathcal{R}_{eq} = \frac{2x}{4\pi \times 10^{-7} \times 9 \times 10^{-4}} = 1.768 \times 10^{9} x \ \mathrm{H}^{-1}$$

$$L = \frac{N^2}{\mathcal{R}_{eq}} = \frac{1000^2}{1.768 \times 10^{9} x} = \frac{565.5 \times 10^{-6}}{x} \ \mathrm{H}$$

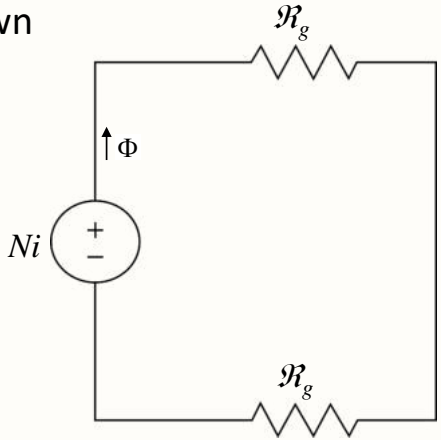

Fig. 58. Magnetic equivalent circuit.

Reproduced with permission from [9789810676575, G. B. Shrestha and M. H. Haque, *AC Circuits and Machines*; Pearson Education South Asia Pte. Ltd.]

Example 9 – Solutions

a) If the flux is held constant, the field energy can be expressed as

$$W_f(\varphi, x) = \frac{1}{2}\varphi^2 \mathcal{R}(x)$$

Then, $F_m = -\dfrac{dW_f}{dx} = -\dfrac{\partial\left[\frac{1}{2}\varphi^2 \mathcal{R}(x)\right]}{\partial x} = -\dfrac{1}{2}\varphi^2 \dfrac{d\mathcal{R}(x)}{dx} = -\dfrac{1}{2}\varphi^2 \times 1.768\times 10^9$

$$\Rightarrow \frac{1}{2}\varphi^2 \times 1.768\times 10^9 = 100 \text{ N, at } x = 1 \text{ mm}$$

$$\Rightarrow \varphi = 0.3363\times 10^{-3} \text{ Wb, at } x = 1 \text{ mm}$$

Also, $\varphi = \dfrac{NI}{\mathcal{R}} = \dfrac{1000I}{1.768\times 10^9 \times 10^{-3}}$, at $x = 1$ mm

Therefore, $\dfrac{1000I}{1.768\times 10^9 \times 10^{-3}} = 0.3363\times 10^{-3} \Rightarrow I = 0.595 \text{ A}$

Example 9 – Solutions

b) If the current is held constant, then

$$W_f(I,x) = \frac{1}{2} I^2 L(x)$$

so that

$$F_m = \frac{dW_f}{dx} = \frac{\partial\left[\frac{1}{2} I^2 L(x)\right]}{\partial x} = \frac{1}{2} I^2 \frac{dL(x)}{dx} = -\frac{1}{2} I^2 \times \frac{565.5\times10^{-6}}{x^2} \text{ N}$$

$$\Rightarrow \frac{1}{2} I^2 \times \frac{565.5\times10^{-6}}{x^2} = 100 \text{ N, at } x = 1 \text{ mm}$$

$$\Rightarrow \frac{1}{2} I^2 \times \frac{565.5\times10^{-6}}{10^{-6}} = 100 \text{ N} \Rightarrow I = 0.595 \text{ A}$$

Summary

In this lecture, you have learnt:

- The principles of electromechanical energy conversion and the operations of electromechanical devices, e.g., convert electrical energy into mechanical energy.
- The Law of Conservation of Energy to establish the energy balance equation.
- Constant Flux and Constant Current methods to evaluate the magnetic force with respect to the magnetic field energy.

References

No.	Slide No.	Image	Reference
1	5	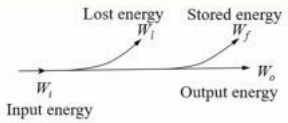	Reprinted from *Electric Machinery and Transformers, 3rd ed.*, (p. 140), by B. S. Guru, & H. R. Hiziroglu, 2001, New York, NY: Oxford University Press. Copyright 2001 by Oxford University Press.
2	6	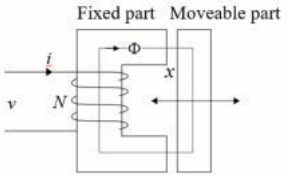	Reprinted from *AC Circuits and Machines*, (p. 121), by G. B. Shrestha, & M. H. Haque, 2006, Singapore: Pearson Education South Asia Pte Ltd. Copyright 2006 by Pearson Education South Asia Pte Ltd. Reprinted with permission.
3	7	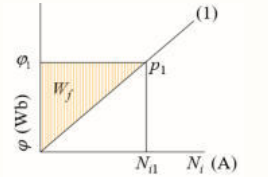	Reprinted from *AC Circuits and Machines*, (p. 121), by G. B. Shrestha, & M. H. Haque, 2006, Singapore: Pearson Education South Asia Pte Ltd. Copyright 2006 by Pearson Education South Asia Pte Ltd. Reprinted with permission.

References

No.	Slide No.	Image	Reference
4	8 and 9	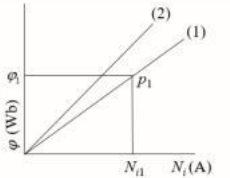	Reprinted from *AC Circuits and Machines*, (p. 122), by G. B. Shrestha, & M. H. Haque, 2006, Singapore: Pearson Education South Asia Pte Ltd. Copyright 2006 by Pearson Education South Asia Pte Ltd. Reprinted with permission.
5	10	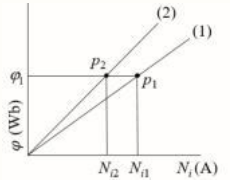	Reprinted from *AC Circuits and Machines*, (p. 123), by G. B. Shrestha, & M. H. Haque, 2006, Singapore: Pearson Education South Asia Pte Ltd. Copyright 2006 by Pearson Education South Asia Pte Ltd. Reprinted with permission.
6	11	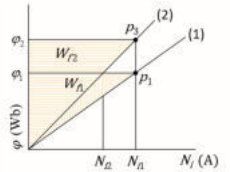	Reprinted from *AC Circuits and Machines*, (p. 124), by G. B. Shrestha, & M. H. Haque, 2006, Singapore: Pearson Education South Asia Pte Ltd. Copyright 2006 by Pearson Education South Asia Pte Ltd. Reprinted with permission.

References

No.	Slide No.	Image	Reference
7	15	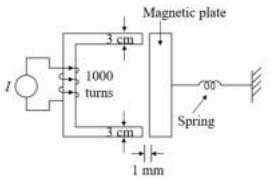	Reprinted from *Electric Machinery and Transformers, 3rd ed.*, (p. 140), by B. S. Guru, & H. R. Hiziroglu, 2001, New York, NY: Oxford University Press. Copyright 2001 by Oxford University Press.
8	16	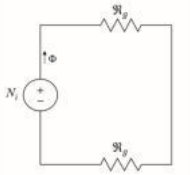	Reprinted from *AC Circuits and Machines*, (p. 126), by G. B. Shrestha, & M. H. Haque, 2006, Singapore: Pearson Education South Asia Pte Ltd. Copyright 2006 by Pearson Education South Asia Pte Ltd. Reprinted with permission.

Lecture 7: Transformers

EE3010: Electrical Devices and Machines

School of Electrical and Electronic Engineering

Associate Professor So Ping Lam
Tel: +65 6790 5026 | Email: eplso@ntu.edu.sg

Disclaimer

The preceding/ following videos contain slides with materials that were originally used for delivery in lecture halls and/ or classrooms in Nanyang Technological University. They might contain adapted materials. While every effort has been made to undertake due diligence to identify the original source, this was not always possible for all materials. The videos are used solely for educational purposes to support the Technology-Enhanced Learning (TEL) aspects of the course. TEL is hosted and deployed in NTULearn and i-NTULearn, a learning management system accessed by students at NTU assigned with a user ID and password. This disclaimer states that no copyright infringement was intended. Should any disagreement or dispute arise, including any claims to rightful ownership, kindly contact CITS, NTU, at +65 6790 5231.

Learning Objectives

By the end of this lecture, you should be able to:

- Describe the operating principles and basic construction of a single-phase transformer.
- Explain the basic assumptions of an ideal transformer and apply the concepts learnt to derive equations related to the turns ratio.
- Identify the concepts of referred values and dot convention of a single-phase transformer.

Topics

(**Chapter 4 - Bhag S. Guru, Electric Machinery and Transformers**)

1. Introduction: Construction
2. Basic Principles: Ideal Transformer
3. Practical Transformer: Equivalent Circuit
4. Performance Analysis:
    i. Regulation
    ii. Losses and Efficiency

Topics

5. Testing: Determination of Parameters
6. Autotransformers
7. Three-phase Transformers:
   i. Three-phase Transformer Banks
   ii. Three-phase Transformers

Notations

Notations	Description
$\mathrm{V}, \mathrm{I}, \text{or } \tilde{\mathrm{V}}, \tilde{\mathrm{I}}$	Normal letters or letters with the **tilde** signs above them indicate phasor quantities. The phase angles of these quantities may change with respect to the reference quantity.
$\mathrm{S}, \mathrm{Z}, \text{or } \hat{\mathrm{S}}, \hat{\mathrm{Z}}$	Normal letters or letters with the **hat** signs above them indicate complex (vector) quantities. The phase angles of these quantities are independent of the reference quantity.
V, I, S, Z	Italic letters indicate the magnitudes of the corresponding phasors or vectors.

Notations

- Revision of concepts on '**Electric Circuits**', '**Three-phase Systems**' and '**Magnetic Circuits**' would be very helpful for this topic.
- Please refer to the notes on those topics to recall important quantities, their symbols and their units.

Introduction

- A simplest transformer shown in Fig. 1 consists of two coils wound on a common magnetic core:
  - Primary winding
  - Secondary winding

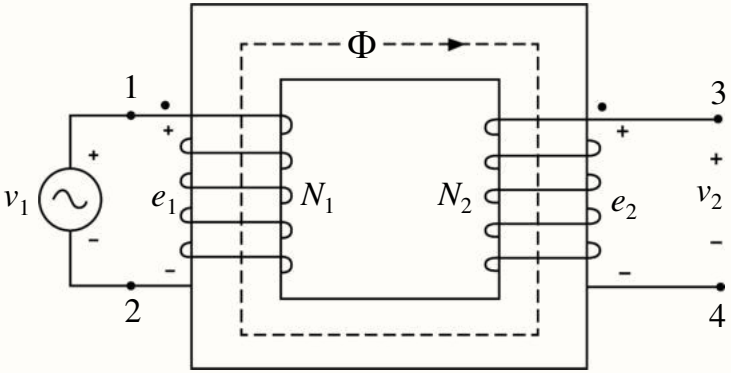

Fig. 1. The simplest transformer.

Introduction

- A time varying current produced by a time varying voltage connected to one winding establishes a time varying flux in the coil. The flux links the secondary winding inducing a voltage in the secondary winding.
  - Step-up transformer, e.g., 110 Vac ⇒ 220 Vac
  - Step-down transformer, e.g., 220 Vac ⇒ 110 Vac
- Either winding can be connected to the source or the load.
- Power transfer from one winding to the secondary winding occurs through the magnetic field or magnetic flux in the core.
- The frequency in the secondary winding is the same as in the primary winding, i.e., $f_1 = f_2$

Construction

- The core is made of thin 'electrical steel' laminations in order to reduce the core (eddy current and hysteresis) losses. The core is of two types (see Figs. 2 and 3):
  - Shell type
  - Core type

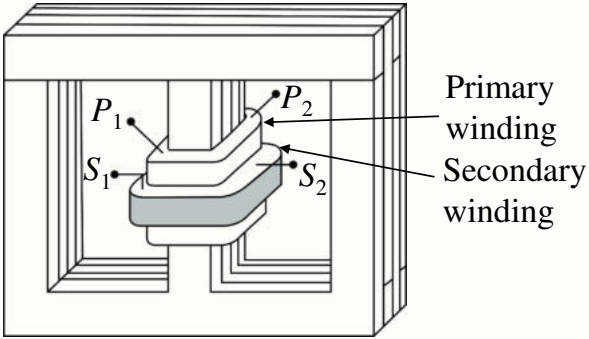

Fig. 2. Shell type transformer.

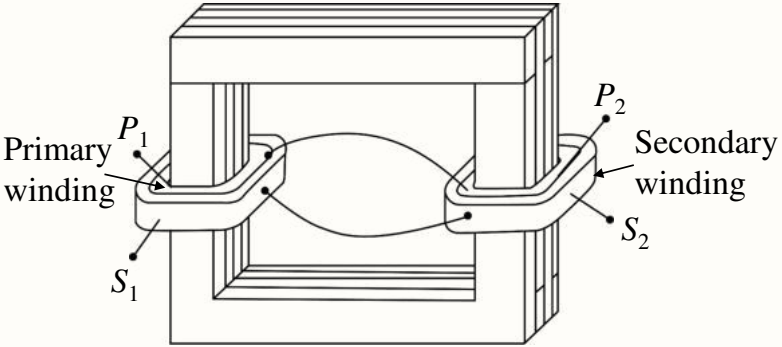

Fig. 3. Core type transformer.

Construction

- The windings may be directly wound on the core in small transformers. However, for high-power transformers, the windings are usually form-wound and then assembled over the core.

- A cooling system is an integral part of the transformer. Usually, a transformer may be cooled by natural air or forced air circulation. When natural air or forced air circulation is not enough, the whole transformer is immersed in a transformer oil tank.

Construction

Ideal Transformer

- The ideal condition assumptions are:
  - The windings have negligible resistance ⇒ no copper losses in the windings, no voltage drops.
  - All the flux is confined to the core and therefore the same flux links both the windings.
  - The permeability of the core is infinitely high, which implies that a vanishingly small mmf (current) is required to set up the flux φ.

    As $\mu_c \to \infty,\ R_c = \left(\dfrac{l}{\mu_c A}\right) \to 0,\quad Ni \downarrow = \varphi R_c \downarrow$
  - The core does not incur any hysteresis or eddy current loss ⇒ no core losses.

Ideal Transformer

- If the number of turns in the two windings are N_1 and N_2 as shown in Fig. 4, Faraday's Law gives

$$v_1 = e_1 = N_1 \frac{d\varphi}{dt}$$

$$v_2 = e_2 = N_2 \frac{d\varphi}{dt}$$

$$\frac{v_1}{v_2} = \frac{e_1}{e_2} = \frac{N_1}{N_2} = a$$

where '$\boldsymbol{a}$' is called the turns ratio.

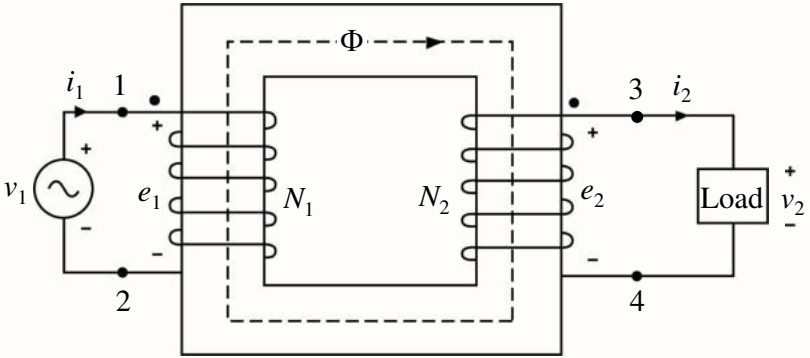

Fig. 4. An ideal transformer under load.

Ideal Transformer

- As the core material is ideal, the total mmf required to create the flux would be vanishingly small, so that

$$N_1 i_1 - N_2 i_2 = 0 \Rightarrow N_1 i_1 = N_2 i_2 \Rightarrow \frac{i_2}{i_1} = \frac{N_1}{N_2} = a$$

- From the above two equations,

$$\frac{v_1}{v_2} = a = \frac{i_2}{i_1} \Rightarrow v_1 i_1 = v_2 i_2$$

- Expressing these equations in effective or rms quantities,

$$\frac{V_1}{V_2} = a, \ \frac{I_2}{I_1} = a, \text{ and, } V_1 I_1^* = V_2 I_2^* \text{ (also } V_1 I_1 = V_2 I_2)$$

Ideal Transformer

- An ideal transformer connected to a source on one side and a load on the other side can be schematically represented as shown in Fig. 5, where

$$\frac{V_1}{V_2} = \frac{E_1}{E_2} = a, \text{ and } \frac{I_2}{I_1} = a \Rightarrow \frac{I_2}{a} = I_1$$

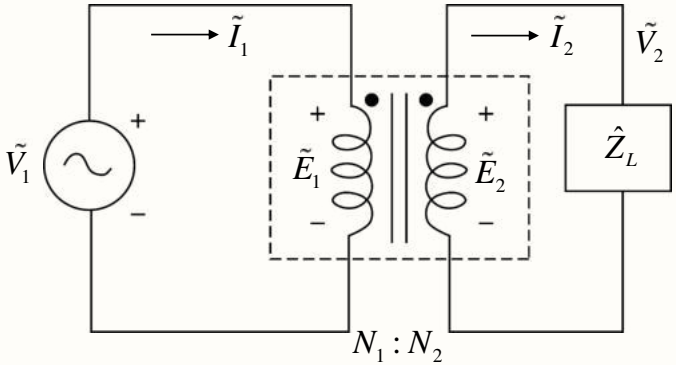

Fig. 5. An ideal transformer connected to a source and a load.

Referred Values

- As shown in Fig. 6, for a voltage V_2 in the secondary side of the transformer, the primary voltage will be: $V_1 = aV_2 = V_2'$
- For a current I_2 in the secondary side, the current in the primary will be:

$$I_1 = \frac{I_2}{a} = I_2'$$

- V_2' and I_2' are called the referred values of V_2 and I_2 referred to the primary side respectively.

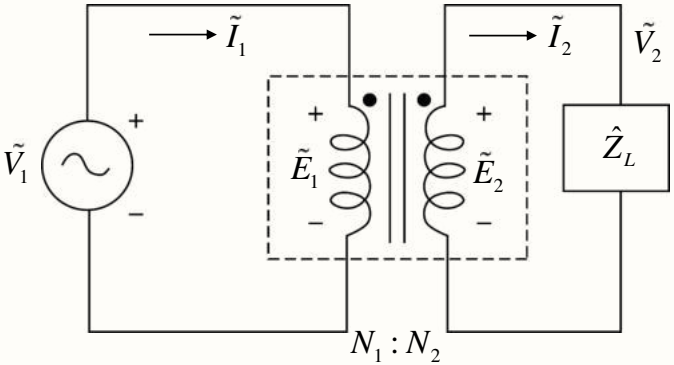

Fig. 6. An ideal transformer.

Referred Values

- If Z_2 is the load impedance on the secondary side, then

$$Z_2 = \frac{V_2}{I_2}$$

- On the primary side the impedance will appear to be

$$Z_1 = \frac{V_1}{I_1} = \frac{aV_2}{I_2 / a} = a^2 \frac{V_2}{I_2} = a^2 Z_2 = Z_2'$$

Z_2' is the referred value of Z_2 referred to the primary side.

- Similarly, V_1, I_1, and Z_1 when referred to the secondary side become

$$V_1' = \frac{V_1}{a}, \quad I_1' = aI_1, \quad \text{and} \quad Z_1' = \frac{Z_1}{a^2}$$

Transformer Polarity – Dot Convention

- It is very important to know the polarity (i.e., the relative direction of induced voltages) of transformer windings to make proper circuit connections.

- For the connections shown in Fig. 7:
  - e_1 has to oppose v_1, and so terminal **1** is positive with respect to terminal **2** on side 1.

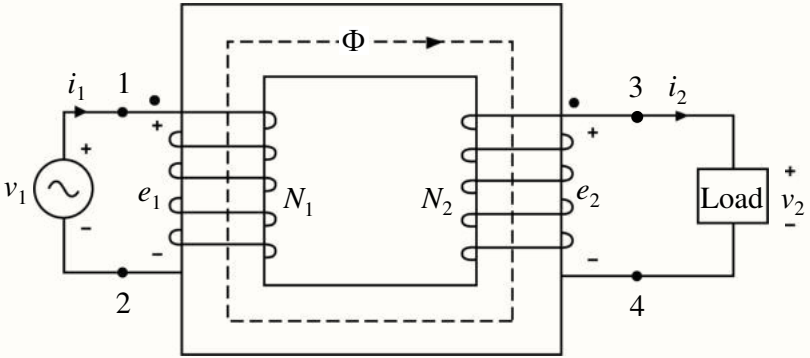

Fig. 7. An ideal transformer under load.

Transformer Polarity – Dot Convention

- The current i_2 on side 2 has to oppose the flux φ created by i_1, so that i_2 will flow in the direction as shown in Fig. 7, for the direction of the winding shown in Fig. 6. Therefore, terminal **3** is positive with respect to terminal **4** on side 2.
- Thus, terminals **1** and **3** are of like polarity (positive in this case), and so are terminals **2** and **4** (negative).

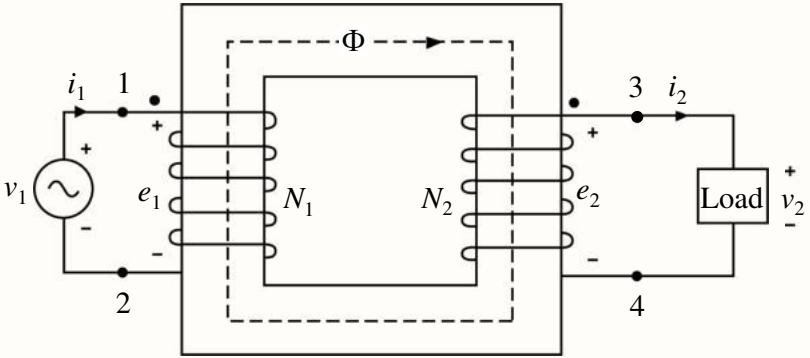

Fig. 7. An ideal transformer under load.

❖ Therefore, terminals **1** and **3** are marked by similar 'dots' as shown.

Transformer Polarity – Dot Convention

- It should be noted that the terminal polarity depends on actual directions of the windings on the core. If the direction of the secondary winding is changed as shown in Fig. 8, the direction of the secondary current and therefore the polarity of the secondary terminals will change as shown.

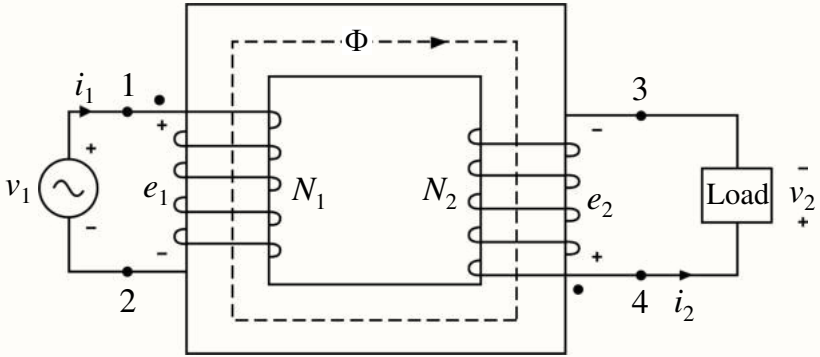

Fig. 8. An ideal transformer under load.

Transformer Polarity – Dot Convention

- But the windings are hidden inside the tank and the winding directions will not be visible in practice. Therefore, terminals with like polarities are indicated by similar 'dots' as shown, outside the transformer tank itself. This practice is known as '**Dot-convention**', which basically means that the terminals with similar 'dots' will have the same polarity.
- It should also be noted that, while the current enters the positive terminal of transformer winding on the source side, the current comes out of the positive terminal on the load side.

Summary

In this lecture, you have learnt:

- The operating principles and basic construction of a single-phase transformer.
- The basic assumptions of an ideal transformer and the concepts learnt to derive equations related to the turns ratio.
- The concepts of referred values and dot convention of a single-phase transformer.

References

No.	Slide No.	Image	Reference
1	8	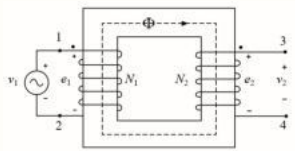	Reprinted from *Electric Machinery and Transformers, 3rd ed.*, (p. 205), by B. S. Guru, & H. R. Hiziroglu, 2001, New York, NY: Oxford University Press. Copyright 2001 by Oxford University Press.
2	10	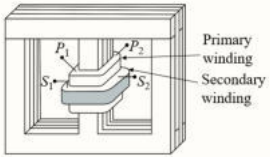	Reprinted from *Electric Machinery and Transformers, 3rd ed.*, (p. 204), by B. S. Guru, & H. R. Hiziroglu, 2001, New York, NY: Oxford University Press. Copyright 2001 by Oxford University Press.
3	10	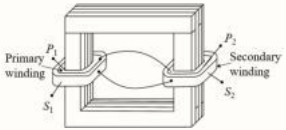	Reprinted from *Electric Machinery and Transformers, 3rd ed.*, (p. 205), by B. S. Guru, & H. R. Hiziroglu, 2001, New York, NY: Oxford University Press. Copyright 2001 by Oxford University Press.

References

No.	Slide No.	Image	Reference
4	14, 19 and 20	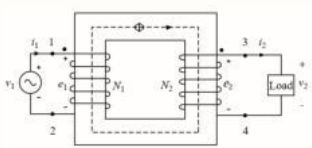	Reprinted from *Electric Machinery and Transformers, 3rd ed.*, (p. 207), by B. S. Guru, & H. R. Hiziroglu, 2001, New York, NY: Oxford University Press. Copyright 2001 by Oxford University Press. Reprinted with permission.
5	21	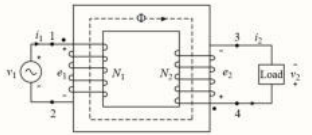	Reprinted from *Electric Machinery and Transformers, 3rd ed.*, (p. 207), by B. S. Guru, & H. R. Hiziroglu, 2001, New York, NY: Oxford University Press. Copyright 2001 by Oxford University Press. Reprinted with permission.

Lecture 8: Transformers

EE3010: Electrical Devices and Machines

School of Electrical and Electronic Engineering

Associate Professor So Ping Lam
Tel: +65 6790 5026 | Email: eplso@ntu.edu.sg

Disclaimer

The preceding/ following videos contain slides with materials that were originally used for delivery in lecture halls and/ or classrooms in Nanyang Technological University. They might contain adapted materials. While every effort has been made to undertake due diligence to identify the original source, this was not always possible for all materials. The videos are used solely for educational purposes to support the Technology-Enhanced Learning (TEL) aspects of the course. TEL is hosted and deployed in NTULearn and i-NTULearn, a learning management system accessed by students at NTU assigned with a user ID and password. This disclaimer states that no copyright infringement was intended. Should any disagreement or dispute arise, including any claims to rightful ownership, kindly contact CITS, NTU, at +65 6790 5231.

Learning Objectives

By the end of this lecture, you should be able to:

- Explain the transformer ratings with respect to rated load, rated voltages and rated currents.
- Analyse the performance of a practical transformer by examining the non-ideal features of a practical transformer.
- Solve simple problems with respect to the ideal transformers and practical transformers.

Transformer Ratings

- The typical nameplate rating of a transformer may look like the form:
  5 kVA, 500/250 V, 50 Hz.

- The nominal **apparent power** rating of 5 kVA indicates that the transformer can deliver up to 5 kVA in a continuous basis. This is also referred to as the '**full load**' or '**rated load**'.

- The primary and the secondary nominal **rated voltages** are 500 V and 250 V respectively. Ratings do not imply the actual operating voltages.

Transformer Ratings

- A transformer is designed to operate at 50 Hz. Operating at different frequency may affect the flux density in the core and the core losses. $V \propto B_m \times f$

- The magnitudes of nominal **rated currents** (**full-load currents**) are:

$$I_1 = \frac{5000\ \text{VA}}{500\ \text{V}} = 10\ \text{A}, \text{and } I_2 = \frac{5000\ \text{VA}}{250\ \text{V}} = 20\ \text{A}$$

- **Turns ratio** $\boldsymbol{a}$ is not generally specified on the nameplate, but calculated from the ratio of the primary rated voltage to the secondary rated voltage of the transformer. i.e., $a = \frac{V_1}{V_2} = \frac{500}{250} = 2$

Example 1

An ideal transformer has 150 turns on the primary and 750 turns on the secondary. The primary is connected to a 240-V, 50-Hz source. The load connected at the secondary draws a current of 4 A at 0.8 pf (lag). Determine

a) The turns ratio,

b) The current in the primary,

c) The power supplied to the load, and

d) The flux in the core.

(Solutions →)

Example 1 – Solutions

a) The turns ratio $a = \dfrac{150}{750} = 0.2$

b) Since $I_2 = 4\ \text{A}$, then $I_1 = \dfrac{I_2}{a} = \dfrac{4}{0.2} = 20\ \text{A}$

c) Since $V_1 = 240\ \text{V}$, then $V_2 = \dfrac{V_1}{a} = \dfrac{240}{0.2} = 1200\ \text{V}$

Therefore, power supplied to the load:

$$P_2 = V_2 I_2 \cos\varphi = 1200 \times 4 \times 0.8 = 3840\ \text{W}$$

d) Since $E = 4.44 f \varphi_m N$, then

$$\varphi_m = \frac{E_1}{4.44 f N_1} = \frac{V_1}{4.44 f N_1} = \frac{240}{4.44 \times 50 \times 150} = 7.21\ \text{mWb}$$

Practical (Non-ideal) Transformer

- Practical transformers deviate from the ideal transformer in many respects. The non-ideal features of a practical transformer have to be appropriately modelled in order to analyse the performance of a practical transformer.
  - Both the windings, primary and secondary, have resistances R_1 and R_2 associated with them (see Fig. 9), which incur power losses of $I_1^2 R_1$ and $I_2^2 R_2$, and voltage drops of $I_1 R_1$ and $I_2 R_2$.

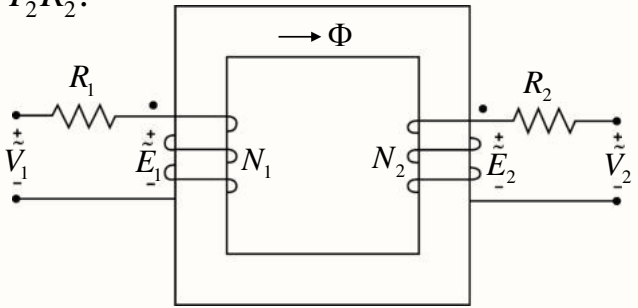

Fig. 9. A practical transformer.

Practical (Non-ideal) Transformer

- **Solution:** These effects in practical transformers may be modelled by representing the winding resistances by lumped resistances R_1 and R_2 in series with the respective winding outside the transformer.
  Note that $V_1 \neq E_1$ and $V_2 \neq E_2$.

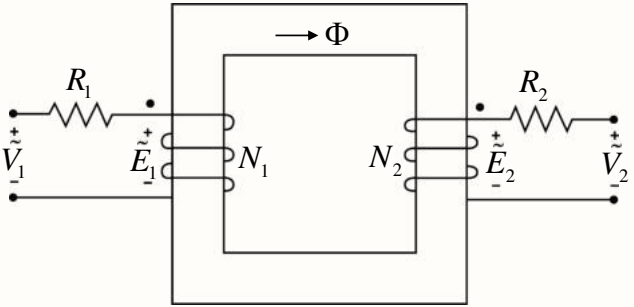

Fig. 9. A practical transformer.

Practical (Non-ideal) Transformer

- In addition to the mutual flux Φ_m, there are leakage fluxes $\Phi_{\ell 1}$ and $\Phi_{\ell 2}$, which link only the primary and the secondary windings respectively as shown in Fig. 10.

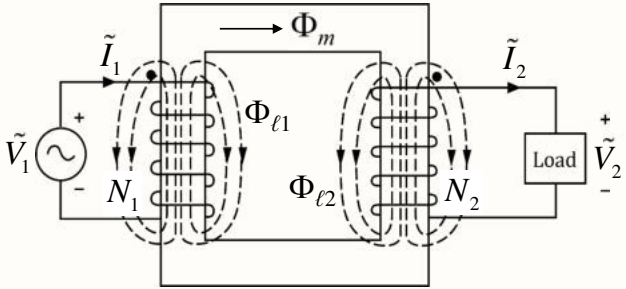

Fig. 10. Transformer with mutual and leakage fluxes.

Practical (Non-ideal) Transformer

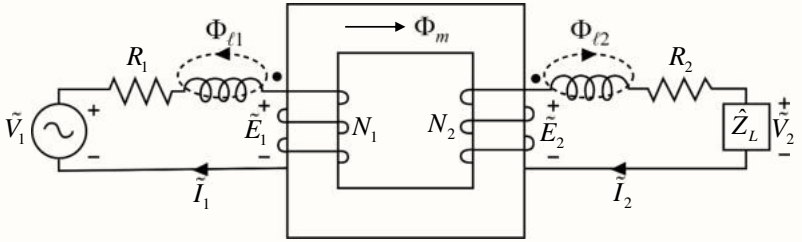

Fig. 11. Hypothetical windings showing mutual and leakage flux linkages separately.

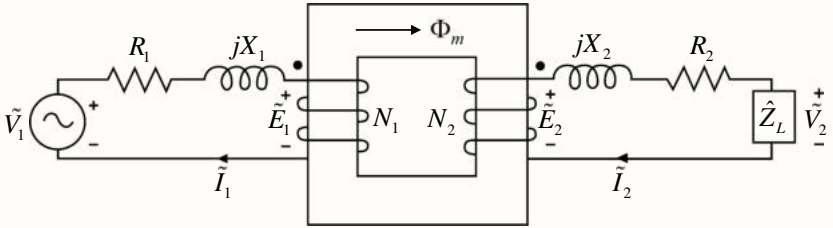

Fig. 12. A non-ideal transformer with winding resistances and leakage reactances.

Practical (Non-ideal) Transformer

- **Solution:** Each winding can be artificially represented by two coils, one producing the mutual flux and the other producing the leakage flux as shown in Fig. 11. The latter is represented outside the transformer proper. The coils producing the leakage flux can then be represented by approximate leakage inductances or leakage reactances as shown in Fig. 12.

Practical (Non-ideal) Transformer

- For the non-ideal transformer incorporating the coil resistances and the leakage reactances as shown in Fig. 13, it should be noted that $V_1 \neq E_1$ and $V_2 \neq E_2$.

  But, $\dfrac{E_1}{E_2} = \dfrac{I_2}{I_1} = \dfrac{N_1}{N_2} = a$

- Further, it should be noted that $V_1 = E_1 + I_1 \times (R_1 + jX_1)$, and $E_2 = V_2 + I_2 \times (R_2 + jX_2)$.

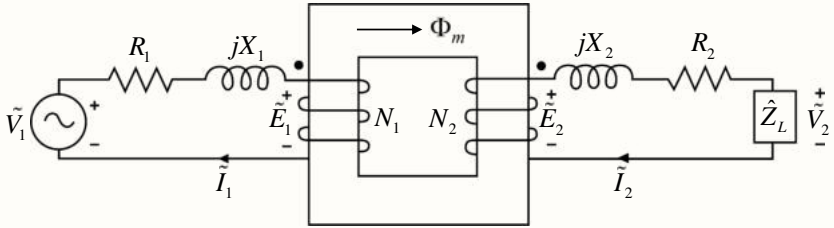

Fig. 13. A non-ideal transformer with winding resistances and leakage reactances.

Practical (Non-ideal) Transformer

- Non-ideal core material
  - requires some current to establish the mutual flux, and
  - incurs core losses consisting of hysteresis and eddy current losses.
- Therefore, the primary winding will draw some current $\boldsymbol{I}_{\Phi}$, even when there is no load connected to the secondary winding in order to establish the mutual flux and to supply the core losses.

Practical (Non-ideal) Transformer

- **Magnetising current** I_m should lag the induced voltage by 90°. So, it can be modelled as the current passing through a reactance jX_{m1} connected across E_1 as shown in Fig. 14.

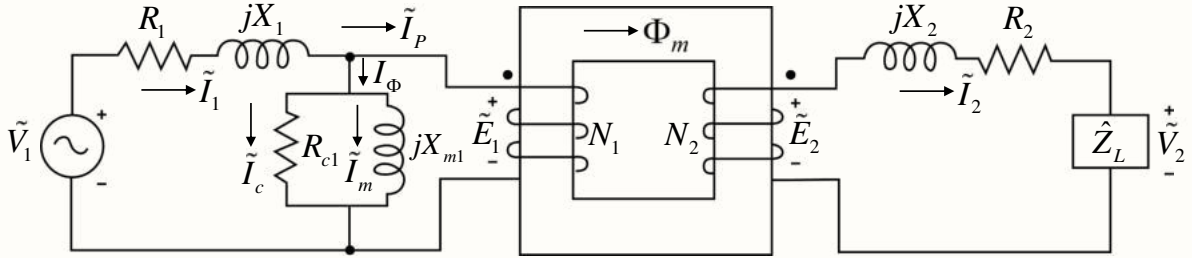

where I_c – core loss current, R_{c1} – core loss resistance, and jX_{m1} – magnetising reactance

Fig. 14. Equivalent circuit of a practical transformer.

Practical (Non-ideal) Transformer

- The **magnetic** or **core losses** P_c consist of
  - Hysteresis loss: $P_h = K_h B_m{}^n f$, $n \approx (1.5 \sim 2.5)$
  - Eddy current loss: $P_e = K_e B_m{}^2 f^2$

  where B_m is the maximum flux density in the core and f is the supply frequency.

- In case of transformers, the frequency f remains constant so that

  $P_h = K_h B_m{}^n f \propto B_m{}^2$ (take $n \approx 2$) and,

  $P_e = K_e B_m{}^2 f^2 \propto B_m{}^2$

  Thus, $P_c = (P_e + P_h) \propto B_m{}^2$

Practical (Non-ideal) Transformer

- Since $E_1 = 4.44 N_1 A B_m f$ and for constant frequency f, $E_1 \propto B_m \Rightarrow E_1^{\,2} \propto B_m^2$

  Therefore, $P_c \propto E_1^{\,2}$

- Therefore, the **total core loss** can be modelled as the loss incurred by a resistance $\boldsymbol{R_{c1}}$ connected across E_1, so that the core loss

$$P_c = \frac{E_1^2}{R_{c1}} = I_c^2 R_{c1}$$

- And, the no-load current

$$I_\Phi = I_c + I_m = \frac{E_1}{R_{c1}} + \frac{E_1}{jX_{m1}}$$

Practical (Non-ideal) Transformer

- The magnetic core is not commonly shown in the equivalent circuit, but indicated symbolically as shown Fig. 15.

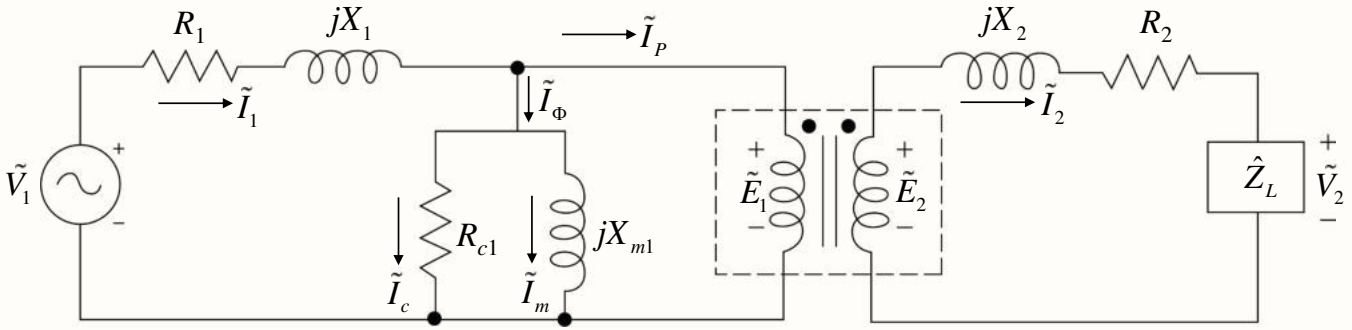

Fig. 15. Equivalent circuit of a practical transformer.

Example 2

A 23-kVA, 2300/230-V, 60-Hz transformer has the following parameters:

$R_1 = 4\ \Omega,\ R_2 = 0.04\ \Omega,\ X_1 = 12\ \Omega,\ X_2 = 0.12\ \Omega,$

$R_{c1} = 20\ \text{k}\Omega$, and $X_{m1} = 15\ \text{k}\Omega$

Draw the actual equivalent circuit of the transformer. If the transformer delivers 75% of its rated load at 0.866 pf (lag) at rated voltage, determine

a) the input current,

b) the input voltage,

c) the total copper loss,

d) the core loss, and

e) the input power.

(Solutions →)

Example 2 – Solutions

The equivalent circuit is shown in Fig. 16 with the parameters listed below.

$R_1 = 4\ \Omega,\ R_2 = 0.04\ \Omega$

$X_1 = 12\ \Omega,\ X_2 = 0.12\ \Omega$

$R_{c1} = 20\ \text{k}\Omega,$ and $X_{m1} = 15\ \text{k}\Omega$

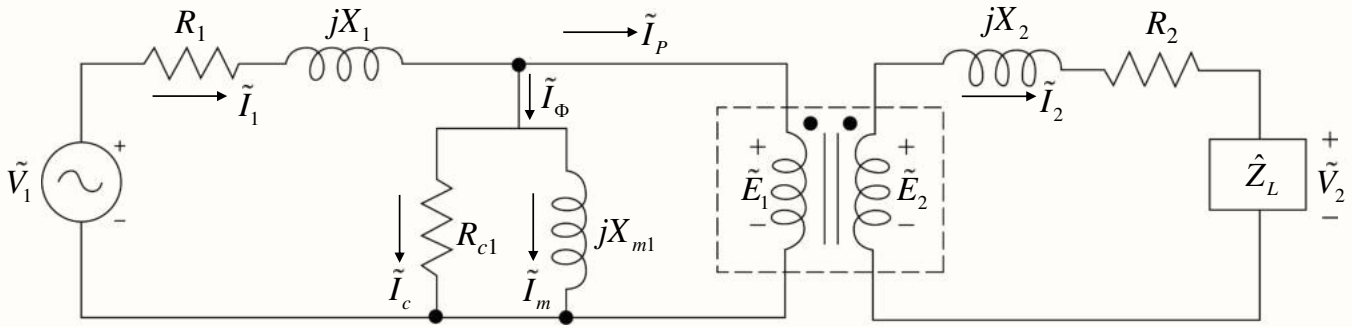

Fig. 16. Equivalent circuit of a transformer.

Example 2 – Solutions

$V_2 = 230\ \text{V}$ (**rated value**)

Let $V_2 = 230\angle 0°\ \text{V}$ (**reference**)

Load $S_2 = 0.75 \times 23\ \text{kVA} \Rightarrow S_2 = 0.75 \times 23\angle 30°\ \text{kVA}$, since $\cos^{-1} 0.866 = 30°$

Load current $I_2 = (S_2 / V_2)^* = 0.75 \times 23 \times 1000\angle -30° / 230\angle 0°$

$= 75\angle -30°\ \text{A}$

$E_2 = V_2 + I_2(R_2 + jX_2) = 230\angle 0° + 75\angle -30° \times (0.04 + j0.12) = 237.18\angle 1.52°$

Turns ratio $a = 2300 / 230 = 10$

Therefore, $E_1 = aE_2 = 2371.8\angle 1.52°\ \text{V}$, and $I_p = I_2 / a = 7.5\angle -30°\ \text{A}$

Example 2 – Solutions

Then,

$$I_c = \frac{E_1}{R_{c1}} = \frac{2371.8\angle 1.52^\circ}{20000} = 0.1186\angle 1.52^\circ \text{ A}$$

$$I_m = \frac{E_1}{jX_{m1}} = \frac{2371.8\angle 1.52^\circ}{j15000} = 0.1581\angle -88.48^\circ \text{ A}$$

$$I_1 = I_p + I_c + I_m$$

$$= 7.5\angle -30^\circ + 0.1186\angle 1.52^\circ + 0.1581\angle -88.48^\circ = 7.683\angle -30.55^\circ \text{ A}$$

and, $V_1 = E_1 + I_1(R_1 + jX_1) = 2371.8\angle 1.52^\circ + 7.683\angle -30.55^\circ \times (4 + j12)$

$$= 2447.6\angle 2.97^\circ \text{ V}$$

Example 2 – Solutions

Now the required quantities can be listed or calculated as

a) the input current $I_1 = 7.683 \text{ A}$

b) the input voltage $V_1 = 2447.6 \text{ V}$

c) the total copper loss: $I_1^2 R_1 + I_2^2 R_2 = 7.683^2 \times 4 + 75^2 \times 0.04 = 461.1 \text{ W}$

d) the core loss:

$$\frac{E_1^2}{R_{c1}} = \frac{2371.8^2}{20000} = 281.3 \text{ W}$$

or alternatively, the core loss:

$$I_c^2 R_{c1} = 0.1186^2 \times 20000 = 281.3 \text{ W}$$

Example 2 – Solutions

e) The input power:

$$V_1 I_1 \cos\varphi = 2447.6 \times 7.683 \times \cos(2.97° + 30.55°) = 15677.4 \text{ W}$$

Also, input power = output power $(S_2 \cos\varphi = V_2 I_2 \cos\varphi)$ + copper loss + core loss

$$= 0.75 \times 23 \times 1000 \times 0.866 + 461.1 + 281.3 = 15680.9 \text{ W}$$

- Check the example in the book, the same problem has been solved for a leading power factor. Compare the effects of power factor.

Summary

In this lecture, you have learnt:

- The transformer ratings with respect to rated load, rated voltages and rated currents.
- The performance of a practical transformer by examining the non-ideal features of a practical transformer.
- Solving simple problems with respect to the ideal transformers and practical transformers.

References

No.	Slide No.	Image	Reference
1	8 and 9	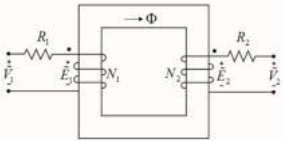	Reprinted from *Electric Machinery and Transformers, 3rd ed.*, (p. 214), by B. S. Guru, & H. R. Hiziroglu, 2001, New York, NY: Oxford University Press. Copyright 2001 by Oxford University Press.
2	10	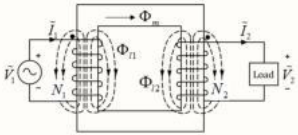	Reprinted from *Electric Machinery and Transformers, 3rd ed.*, (p. 214), by B. S. Guru, & H. R. Hiziroglu, 2001, New York, NY: Oxford University Press. Copyright 2001 by Oxford University Press.
3	11	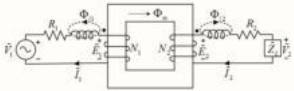	Reprinted from *Electric Machinery and Transformers, 3rd ed.*, (p. 215), by B. S. Guru, & H. R. Hiziroglu, 2001, New York, NY: Oxford University Press. Copyright 2001 by Oxford University Press.

References

No.	Slide No.	Image	Reference
4	11 and 13	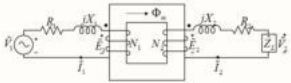	Reprinted from *Electric Machinery and Transformers, 3rd ed.*, (p. 215), by B. S. Guru, & H. R. Hiziroglu, 2001, New York, NY: Oxford University Press. Copyright 2001 by Oxford University Press.
5	15	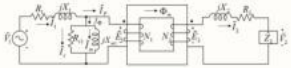	Reprinted from *Electric Machinery and Transformers, 3rd ed.*, (p. 217), by B. S. Guru, & H. R. Hiziroglu, 2001, New York, NY: Oxford University Press. Copyright 2001 by Oxford University Press.
6	18 and 20	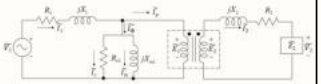	Reprinted from *Electric Machinery and Transformers, 3rd ed.*, (p. 218), by B. S. Guru, & H. R. Hiziroglu, 2001, New York, NY: Oxford University Press. Copyright 2001 by Oxford University Press.

Lecture 9: Transformers

EE3010: Electrical Devices and Machines

School of Electrical and Electronic Engineering

Associate Professor So Ping Lam
Tel: +65 6790 5026 | Email: eplso@ntu.edu.sg

Disclaimer

The preceding/ following videos contain slides with materials that were originally used for delivery in lecture halls and/or classrooms in Nanyang Technological University. They might contain adapted materials. While every effort has been made to undertake due diligence to identify the original source, this was not always possible for all materials. The videos are used solely for educational purposes to support the Technology-Enhanced Learning (TEL) aspects of the course. TEL is hosted and deployed in NTULearn and i-NTULearn, a learning management system accessed by students at NTU assigned with a user ID and password. This disclaimer states that no copyright infringement was intended. Should any disagreement or dispute arise, including any claims to rightful ownership, kindly contact CITS, NTU, at +65 6790 5231.

Learning Objectives

By the end of this lecture, you should be able to:

- Describe the methods to develop the exact equivalent circuits and approximate equivalent circuits of a practical transformer.
- Calculate the input voltage and input current using the exact equivalent circuits and approximate equivalent circuits.
- Compare the results obtained by the approximate method with those obtained by the exact method.

Exact Equivalent Circuits

- Fig. 17 shows the exact equivalent circuit of a transformer. The calculations involved in transformer problems can be significantly reduced if the transformer circuit is simplified by referring all the circuit parameters to only one side. The circuits thus obtained are called the exact equivalent circuits referred to that side.

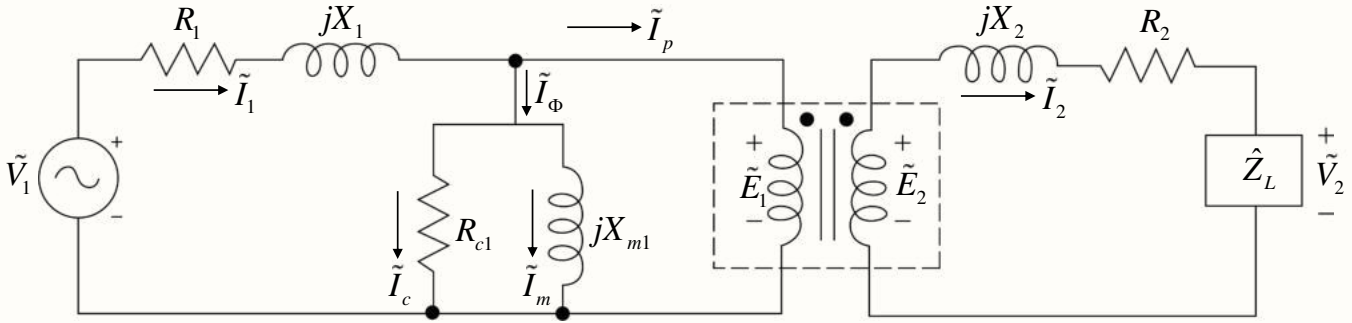

Fig. 17. Exact equivalent circuit of a transformer.

Exact Equivalent Circuits

- The equivalent circuit can be referred to the primary side (see Fig. 18) by making the following transformations:

$$Z_2 \rightarrow Z_2' = a^2 Z_2 \;\; (R_2' = a^2 R_2,\; X_2' = a^2 X_2,\; Z_L' = a^2 Z_L)$$

$$V_2 \rightarrow V_2' = aV_2,\; E_2 \rightarrow E_2' = aE_2 = E_1$$

$$I_2 \rightarrow I_2' = \frac{1}{a} I_2$$

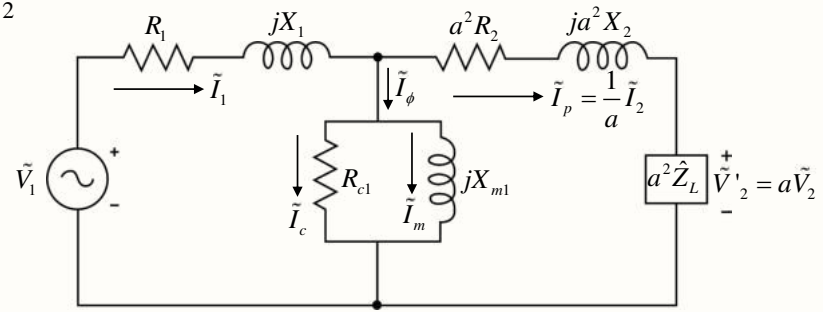

Fig. 18. Exact equivalent circuit referred to the primary.

Exact Equivalent Circuits

- The equivalent circuit can be referred to the secondary side (see Fig. 19) by making the following transformations:

$$Z_1 \rightarrow Z_1' = \frac{1}{a^2} Z_1$$

$$R_1 \rightarrow R_1' = \frac{R_1}{a^2}, \; X_1 \rightarrow X_1' = \rightarrow \frac{X_1}{a^2}$$

$$R_{c1} \rightarrow R_{c1}' = \frac{R_{c1}}{a^2}, \; X_{m1} \rightarrow X_{m1}' = \frac{X_{m1}}{a^2}$$

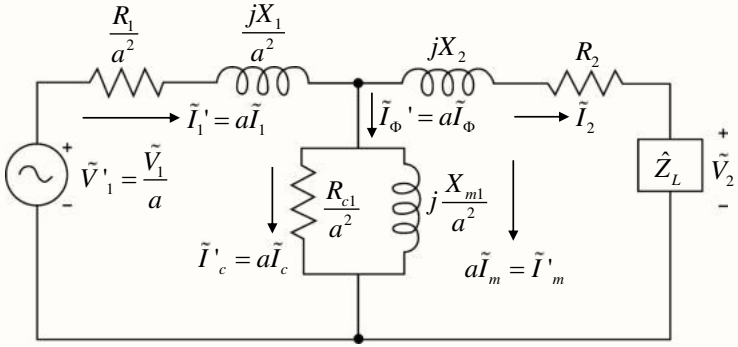

Fig. 19. Exact equivalent circuit referred to the secondary.

Exact Equivalent Circuits

$$I_1 \rightarrow I_1' = aI_1$$

$$I_\Phi \rightarrow I_\Phi' = aI_\Phi$$

$$I_c \rightarrow I_c' = aI_c$$

$$I_m \rightarrow I_m' = aI_m$$

$$V_1 \rightarrow V_1' = \frac{V_1}{a}$$

$$E_1 \rightarrow E_1' = \frac{E_1}{a} = E_2$$

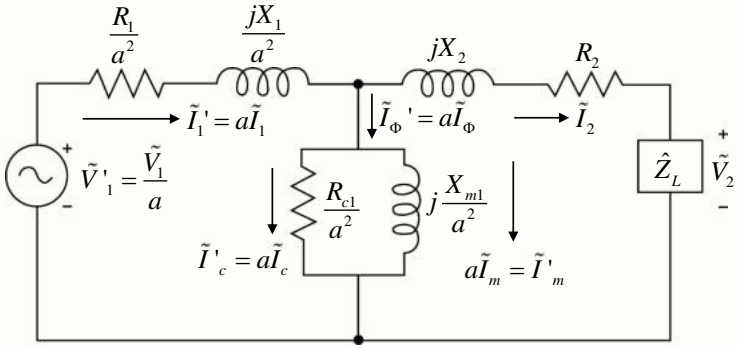

Fig. 19. Exact equivalent circuit referred to the secondary.

- These equivalent circuits can be used to analyse transformer circuits to obtain any desired results. The referred values can be converted back to the actual values as required.

- Solve Example 2 in Lecture 8 using these exact equivalent circuits.

Transformer Parameter Values

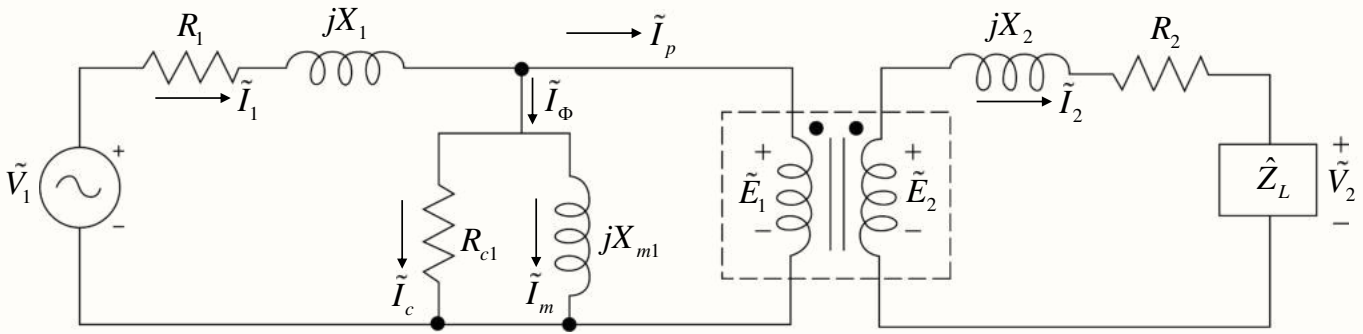

Fig. 20. Exact equivalent circuit of a transformer.

Transformer Parameter Values

❖ **Series Components**:

- R_1 and R_2 represent the resistances of the copper coils, and therefore these resistances are usually very small.
- X_1 and X_2 represent the reactances arising from the leakage fluxes, which are very small. Therefore their magnitudes are also very small.
- The losses and the voltage drops in these series parameters are usually very small, and often ignorable.

Transformer Parameter Values

❖ **Shunt Components**:

- I_m represents the currents drawn to set up the magnetic flux in the core, and I_c represents the current that accounts for the core loss.
- Since very good magnetic material is used in transformers, both these currents are very small, often ignorable.
- The corresponding shunt impedances R_{c1} and X_{m1} are very large, often taken as infinity and ignored from the circuit.

Approximate Equivalent Circuits

- More practically, because of the relative values of the series and the shunt components, it introduces very small error if we move the shunt branch from the middle position to the input side, as indicated in Fig. 21.

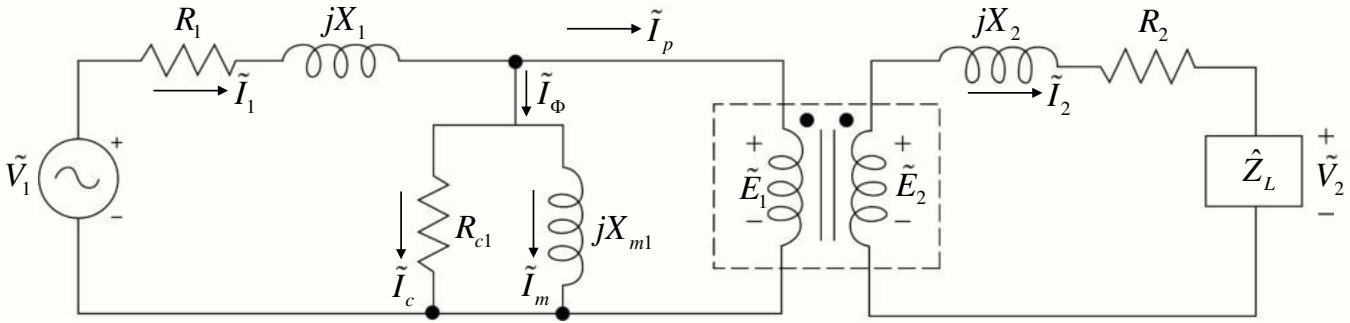

Fig. 21. Exact equivalent circuit of a transformer.

Approximate Equivalent Circuits

- Such a simplified circuit is called the **approximate equivalent circuit** as shown in Fig. 22, and commonly used to simplify the computations. This, however, will introduce a small amount of error.

- The circuit may be further simplified by referring all the secondary quantities to the primary side.

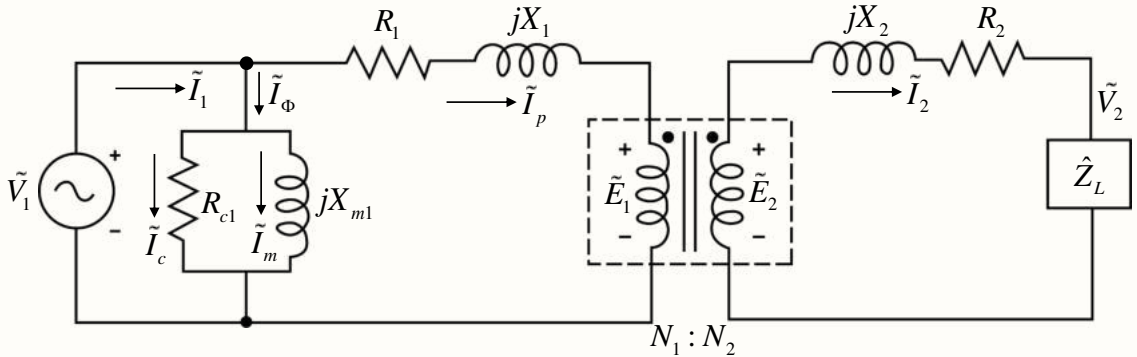

Fig. 22. Approximate equivalent circuit of a transformer.

Approximate Equivalent Circuit Referred to the Primary

- The series components in the approximate equivalent circuit are in series, and can be combined as

  $R_{e1} = R_1 + a^2 R_2$, and $X_{e1} = X_1 + a^2 X_2$

- They are called the total effective resistance and the total effective leakage reactance referred to the primary side (side 1) respectively, as shown in Fig. 23.

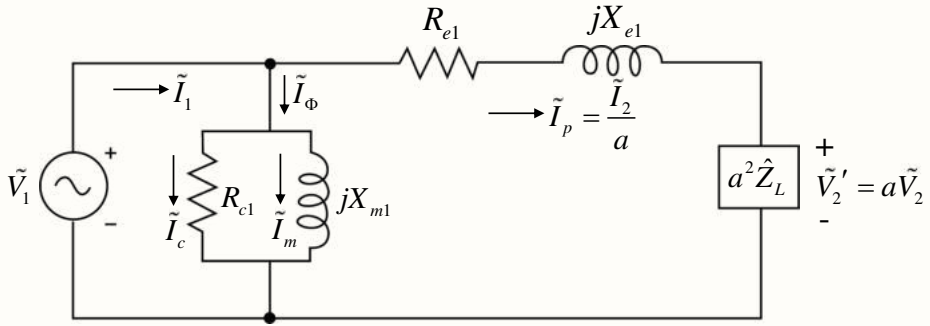

Fig. 23. Approximate equivalent circuit referred to the primary.

Approximate Equivalent Circuit Referred to the Secondary

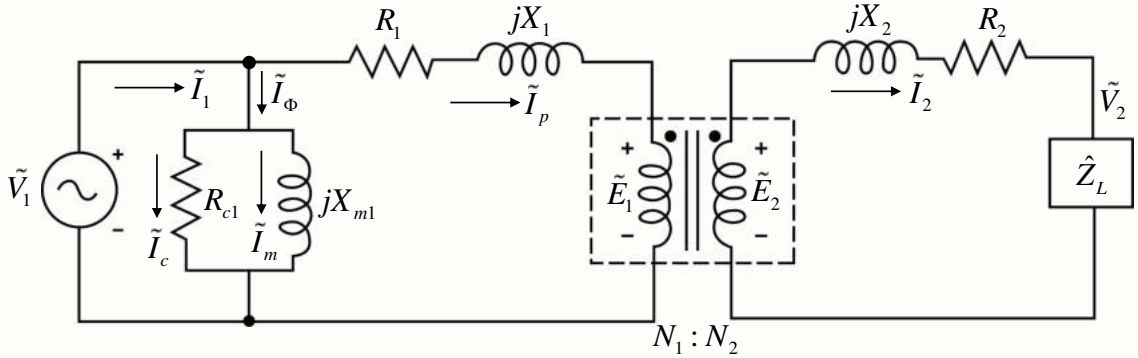

Fig. 24. Approximate equivalent circuit of a transformer.

Approximate Equivalent Circuit Referred to the Secondary

- Similarly, the circuit may be referred to the secondary side as shown Fig. 25, where

$$R_{e2} = \frac{R_1}{a^2} + R_2, \text{ and } X_{e2} = \frac{X_1}{a^2} + X_2$$

are the total effective resistance and the total effective leakage reactance referred to the secondary side (side 2) respectively.

- It should further be noted that the shunt components are also referred to the secondary side.

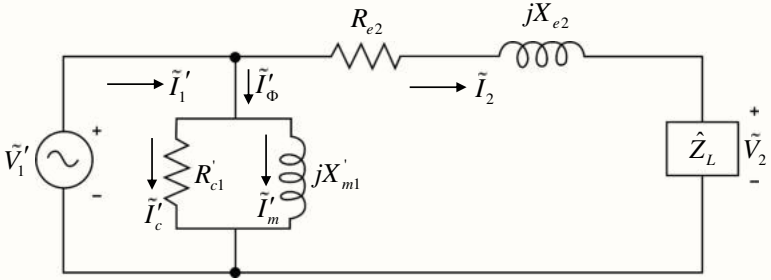

Fig. 25. Approximate equivalent circuit referred to the secondary.

Example 3

A 23-kVA, 2300/230-V, 60-Hz transformer has the following parameters:

$$R_1 = 4\ \Omega,\ R_2 = 0.04\ \Omega,\ X_1 = 12\ \Omega,\ X_2 = 0.12\ \Omega$$

$$R_{c1} = 20\ \text{k}\Omega,\ \text{and}\ \ X_{m1} = 15\ \text{k}\Omega.$$

If the transformer delivers 75% of its rated load at 0.866 pf (lag) at rated voltage, calculate the input voltage using the approximate equivalent circuit referred to the primary.

(Solutions →)

Example 3 – Solutions

$a = \dfrac{2300}{230} = 10$, and the circuit is shown in Fig. 26, where

$R_{e1} = 4 + 10^2 \times 0.04 = 8\ \Omega$, and

$X_{e1} = 12 + 10^2 \times 0.12 = 24\ \Omega$

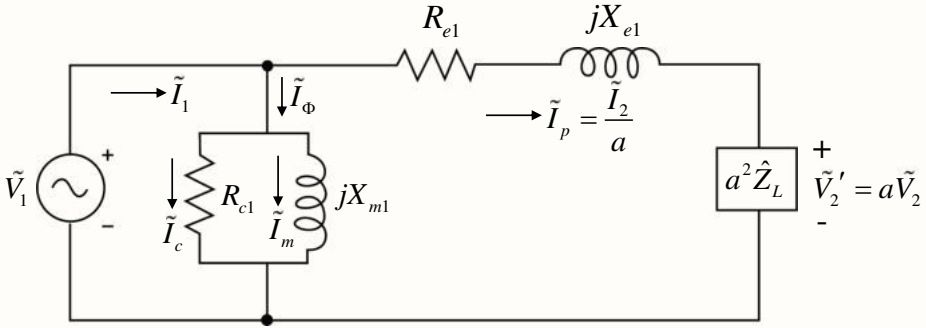

Fig. 26. Approximate equivalent circuit referred to the primary.

Example 3 – Solutions

As before,

$V_2 = 230\angle 0°$ V (**Reference**)

$I_2 = 75\angle -30°$ A, so that

$$V_2' = aV_2 = 10 \times 230\angle 0° = 2300\angle 0° \text{ V}$$

$$I_p = I_2' = \frac{I_2}{a} = \frac{75\angle -30°}{10} = 7.5\angle -30° \text{ A}$$

$$V_1 = V_2' + I_2' \times (R_{e1} + jX_{e1}) = 2300\angle 0° + 7.5\angle -30° \times (8 + j24) = 2445.21\angle 2.95°$$

- Compare this with the value obtained by the exact method ($2447.6\angle 2.97°$ V).
- Calculate other values as before and compare the answers.

Summary

In this lecture, you have learnt:

- The methods to develop the exact equivalent circuits and approximate equivalent circuits of a practical transformer.
- The calculation of input voltage and input current using the exact equivalent circuits and approximate equivalent circuits.
- The comparison of the results obtained by the approximate method with those obtained by the exact method.

References

No.	Slide No.	Image	Reference
1	4, 8, and 11	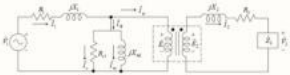	Reprinted from *Electric Machinery and Transformers, 3rd ed.*, (p. 218), by B. S. Guru, & H. R. Hiziroglu, 2001, New York, NY: Oxford University Press. Copyright 2001 by Oxford University Press.
2	5	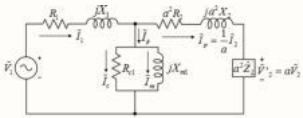	Reprinted from *Electric Machinery and Transformers, 3rd ed.*, (p. 219), by B. S. Guru, & H. R. Hiziroglu, 2001, New York, NY: Oxford University Press. Copyright 2001 by Oxford University Press.
3	6 and 7	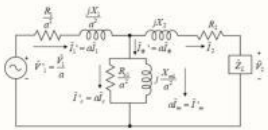	Reprinted from *Electric Machinery and Transformers, 3rd ed.*, (p. 219), by B. S. Guru, & H. R. Hiziroglu, 2001, New York, NY: Oxford University Press. Copyright 2001 by Oxford University Press.

References

No.	Slide No.	Image	Reference
4	12 and 14	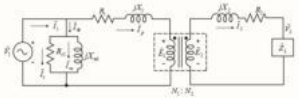	Reprinted from *Electric Machinery and Transformers, 3rd ed.*, (p. 222), by B. S. Guru, & H. R. Hiziroglu, 2001, New York, NY: Oxford University Press. Copyright 2001 by Oxford University Press.
5	13 and 17	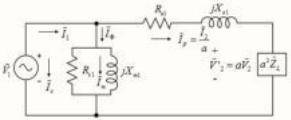	Reprinted from *Electric Machinery and Transformers, 3rd ed.*, (p. 222), by B. S. Guru, & H. R. Hiziroglu, 2001, New York, NY: Oxford University Press. Copyright 2001 by Oxford University Press.
6	15	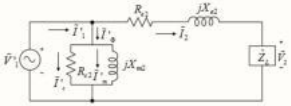	Reprinted from *Electric Machinery and Transformers, 3rd ed.*, (p. 223), by B. S. Guru, & H. R. Hiziroglu, 2001, New York, NY: Oxford University Press. Copyright 2001 by Oxford University Press.

Lecture 10: Transformers

EE3010: Electrical Devices and Machines

School of Electrical and Electronic Engineering

Associate Professor So Ping Lam
Tel: +65 6790 5026 | Email: eplso@ntu.edu.sg

Disclaimer

The preceding/ following videos contain slides with materials that were originally used for delivery in lecture halls and/ or classrooms in Nanyang Technological University. They might contain adapted materials. While every effort has been made to undertake due diligence to identify the original source, this was not always possible for all materials. The videos are used solely for educational purposes to support the Technology-Enhanced Learning (TEL) aspects of the course. TEL is hosted and deployed in NTULearn and i-NTULearn, a learning management system accessed by students at NTU assigned with a user ID and password. This disclaimer states that no copyright infringement was intended. Should any disagreement or dispute arise, including any claims to rightful ownership, kindly contact CITS, NTU, at +65 6790 5231.

Learning Objectives

By the end of this lecture, you should be able to:

- Evaluate the transformer performance using the voltage regulation.
- Calculate the core losses and copper losses in a practical transformer.
- Apply the concepts learnt in maximum efficiency and full-load efficiency to evaluate the transformer performance.

Transformer Performance

❖ **Voltage Regulation**:

- Consider a transformer supplying a **full load** at **rated voltage** as shown in Fig. 27.
- To maintain rated voltage V_2 at the load terminals, the input voltage V_1' has to be maintained at a level different from V_2 by the amount of voltage drop in the series impedance $(Z_{e2} = R_{e2} + jX_{e2})$.

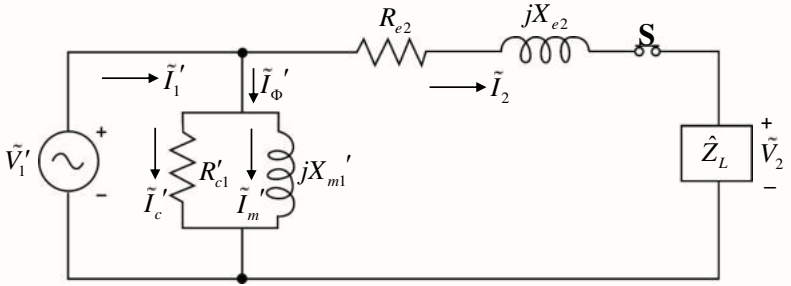

Fig. 27. Approximate equivalent circuit referred to the secondary.

Transformer Performance

- If the load switch is now opened, there would be no current and so no voltage drop in Z_{e2}. Hence, the voltage across the load terminals will change from V_2 to V_1'. The amount of voltage change at the load terminals when the full load operating at rated voltage is disconnected expressed as a percentage of the rated voltage is called the **Voltage Regulation**.

- Ideal transformers will have zero voltage regulation. Smaller voltage regulation is better for transformer operation. Therefore, the voltage regulation is used as a '**figure of merit**' for transformers.

Transformer Performance

- Voltage regulation (VR) can be quantitatively defined as:

$$VR\% = \frac{V_{2NL} - V_{2FL}}{V_{2FL}} \times 100 = \frac{V'_1 - V_2}{V_2} \times 100$$ (**referred to secondary** as shown in Fig. 28)

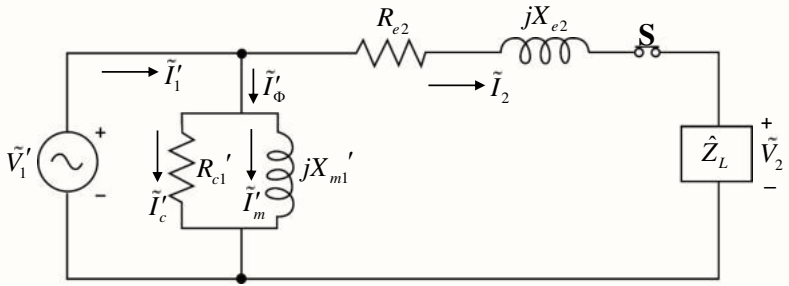

Fig. 28. Approximate equivalent circuit referred to the secondary.

Transformer Performance

- VR can also be referred to the primary as

$$VR\% = \frac{V_1' - V_2}{V_2} \times 100 = \frac{V_1/a - V_2}{V_2} \times 100 = \frac{V_1 - aV_2}{aV_2} \times 100 = \frac{V_1 - V_2'}{V_2'} \times 100$$

- This is equivalent to the use of the approximate equivalent circuit referred to the primary side, as shown in Fig. 29.

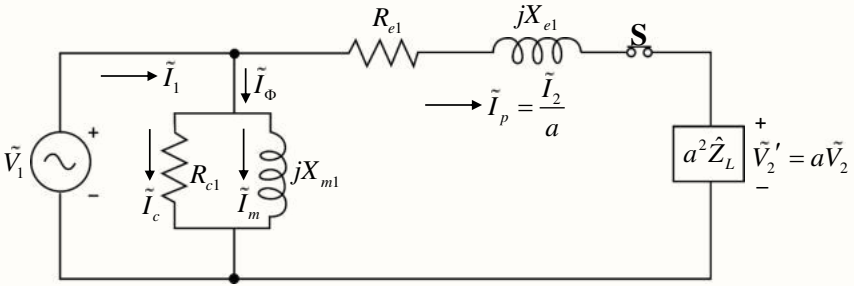

Fig. 29. Approximate equivalent circuit referred to the primary.

Transformer Performance

- It should be noted that while using the approximate equivalent circuit to calculate the voltage regulation, the shunt branch of X_m and R_c does not affect the calculations in any way and can be totally ignored.

Example 4

A 23-kVA, 2300/230-V, 60-Hz transformer has the following parameters:

$R_1 = 4\ \Omega$, $R_2 = 0.04\ \Omega$, $X_1 = 12\ \Omega$, $X_2 = 0.12\ \Omega$,

$R_{c1} = 20\ \text{k}\Omega$, and $X_{m1} = 15\ \text{k}\Omega$

Calculate the voltage regulation of the transformer referred to the secondary side when it delivers full load at 0.8 pf (lag) at rated voltage.

(Solutions →)

Example 4 – Solutions

$$a = \frac{2300}{230} = 10$$

The circuit is shown in Fig. 30, where

$$R_{e2} = \frac{4}{10^2} + 0.04 = 0.08\ \Omega, \text{ and } X_{e2} = \frac{12}{10^2} + 0.12 = 0.24\ \Omega$$

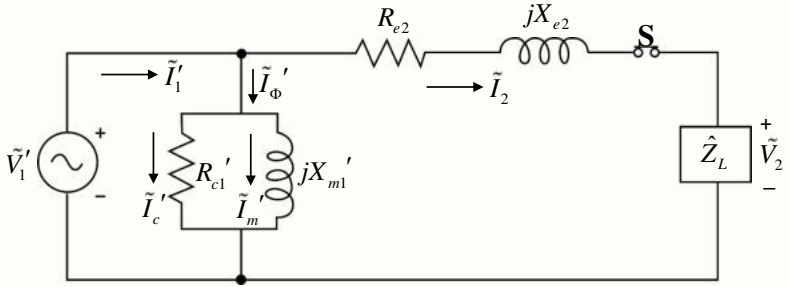

Fig. 30. Approximate equivalent circuit referred to the secondary.

Example 4 – Solutions

Let $V_2 = 230\angle 0°\ \text{V}$ (**Reference**)

At full load, $I_2 = 23 \times \dfrac{1000}{230} = 100\ \text{A}$, and

for $0.8\ \text{pf}$, $\varphi = \cos^{-1} 0.8 = 36.87°$

For lagging pf, $I_2 = 100\angle -36.87°\ \text{A}$, so that,

$$V_1' = V_2 + I_2(R_{e2} + jX_{e2}) = 230\angle 0° + 100\angle -36.87°(0.08 + j0.24) = 251.2\angle 3.29°\ \text{V}$$

Therefore, $VR\% = \dfrac{251.2 - 230}{230} \times 100 = 9.22\ \%$ (rejected)

Phasor Diagrams

- A sketch of the phasor diagram can be very helpful in understanding the nature of the voltage regulation.
  - For the above example with **lagging** power factor, it can be drawn as shown in Fig. 31.
  - It is clearly seen that V_1' is larger than V_2, and therefore the voltage regulation will be positive.

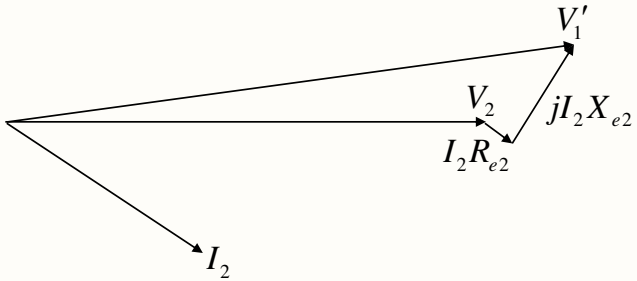

$V_1' > V_2 \Rightarrow$ postive regulation

Fig. 31. Phasor diagram.

Reproduced with permission from [9789810676575, G. B. Shrestha and M. H. Haque, *AC Circuits and Machines*; Pearson Education South Asia Pte. Ltd.]

Phasor Diagrams

- For a sufficiently **leading** power factor, the phasor diagram will look as shown Fig. 32.
- It can be clearly seen that V_1' is smaller than V_2, and therefore the voltage regulation will be negative. This implies that the voltage at the load terminals will decrease when the load is disconnected.

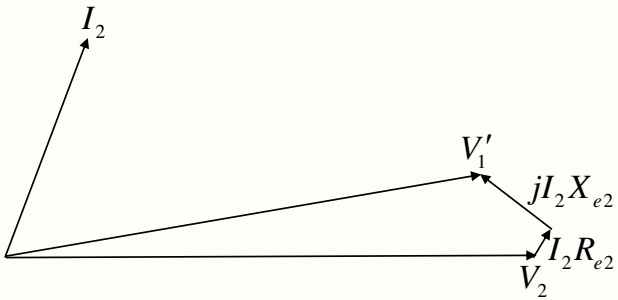

$V_1' < V_2 \Rightarrow$ negative regulation

Fig. 32. Phasor diagram.

Reproduced with permission from [9789810676575, G. B. Shrestha and M. H. Haque, *AC Circuits and Machines*; Pearson Education South Asia Pte. Ltd.]

❖ Repeat Example 4 for a pf of 0.8 lead to verify that the voltage regulation is negative in this situation.

Losses and Efficiency

- The losses in transformers consist of:
  - The magnetic losses – core losses
  - The copper losses
- The magnetic core losses P_m consist of two components:
  - Hysteresis loss
  - Eddy current loss

As the flux and the flux density remain practically constant in a transformer, both these components of the magnetic losses remain constant. Therefore, these losses are also called fixed losses.

Losses and Efficiency

- The copper losses P_{cu} (also known as I^2R loss) occur in the primary and the secondary windings. These depend on the currents in the windings and therefore on the load supplied by the transformer. These losses are also called variable losses.

- The power flow diagram of a transformer is shown in Fig. 33, and the input power can be expressed as $P_{in} = P_o + P_{cu} + P_m$.

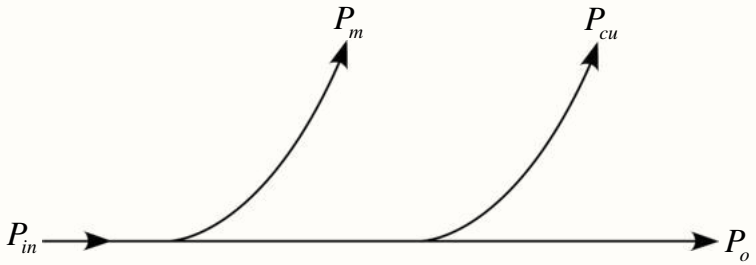

Fig. 33. Power flow diagram of a transformer.

Losses and Efficiency

- Consider the approximate equivalent circuit referred to the secondary side as shown in Fig. 34, the copper loss is

$$P_{cu} = I_2^2 R_{e2}$$

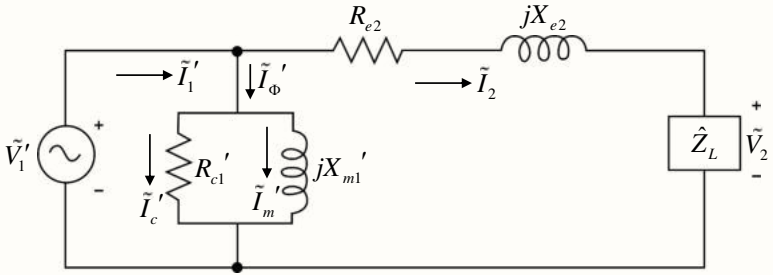

Fig. 34. Approximate equivalent circuit referred to the secondary.

It is useful to note that the copper loss at a fraction $\boldsymbol{x}$ of the rated current, i.e., $I_2 = xI_{2fl}$, can be written as

$$P_{cu} = I_2^2 R_{e2} = \frac{I_2^2}{I_{2\,fl}^2} I_{2\,fl}^2 R_{e2} = x^2 P_{cu\,fl} \quad (\text{since } x = \frac{I_2}{I_{2\,fl}})$$

Losses and Efficiency

- Noting that output $P_o = V_2 I_2 \cos\theta$, the efficiency can be expressed as

$$\eta = \frac{P_o}{P_i} = \frac{V_2 I_2 \cos\theta}{V_2 I_2 \cos\theta + I_2^2 R_{e2} + P_m}$$

- The variation of efficiency η with load current I_2 is shown in Fig. 35.

- Clearly, at no load: $P_o = 0 \Rightarrow \eta = 0$

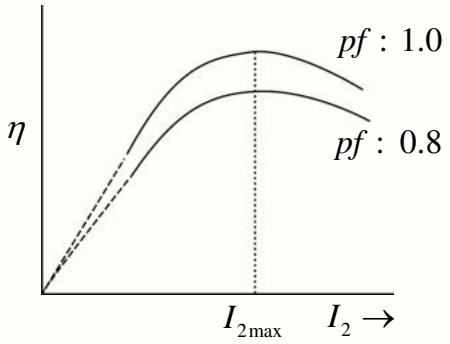

Fig. 35. Variation of efficiency with load current.

Reproduced with permission from [9789810676575, G. B. Shrestha and M. H. Haque, *AC Circuits and Machines*; Pearson Education South Asia Pte. Ltd.]

Losses and Efficiency

- For a given pf, the efficiency increases with increasing I_2 (i.e., increasing load) and reaches a maximum value before it starts to drop.

- By equating: $\dfrac{d\eta}{dI_2} = 0,$

  the condition for maximum efficiency $\eta_{\max}$ is obtained as

  $$I_{2\max}^2 R_{e2} = P_m$$

  i.e., the maximum efficiency occurs at a current level, at which **the copper losses are equal to the core losses**, as depicted in Fig. 36.

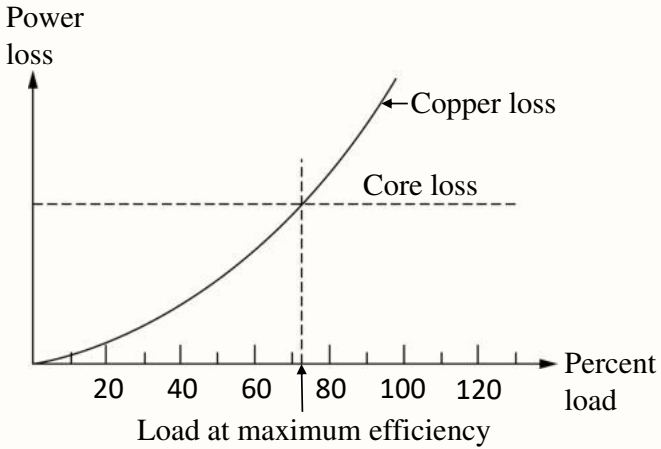

Fig. 36. Losses in a transformer.

Example 5

A 120-kVA, 2400/240-V transformer has the following parameters:

$R_1 = 0.75\ \Omega,\ X_1 = 0.8\ \Omega,\ R_2 = 0.01\ \Omega,\ X_2 = 0.02\ \Omega$

The transformer is designed to have maximum efficiency at 70 % of its rated load. Determine

a) the kVA loading of the transformer at maximum efficiency,

b) the maximum efficiency at 0.8 pf lagging,

c) the full-load efficiency at 0.8 pf lagging, and

d) the half-load efficiency at 0.8 pf lagging.

(Solutions →)

Example 5 – Solutions

a) kVA loading at maximum efficiency: $S_{\max} = 0.7 \times 120 \text{ kVA} = 84 \text{ kVA}$

At full load:

$$I_{1fl} = \frac{S_{fl}}{V_1} = \frac{120000}{2400} = 50 \text{ A}$$

$$I_{2fl} = \frac{S_{fl}}{V_2} = \frac{120000}{240} = 500 \text{ A}$$

Full load copper loss:

$$P_{cu-fl} = I_{1fl}^2 R_1 + I_{2fl}^2 R_2 = 50^2 \times 0.75 + 500^2 \times 0.01 = 4375 \text{ W}$$

Copper loss at maximum efficiency:

$$P_{cu-\max} = 0.7^2 \times 4375 = 2143.75 \text{ W (since } P_{cu} = x^2 P_{cu-fl})$$

Therefore, magnetic core losses: $P_m = 2143.75 \text{ W}$

Example 5 – Solutions

b) Maximum efficiency at 0.8 pf lagging:

Fraction of load for maximum efficiency $= x = 0.7$

Power output $= VIx\cos\theta = 120000 \times 0.7 \times 0.8 = 67200 \text{ W}$

Copper loss $= 0.7^2 \times 4375 = 2143.75 \text{ W}$ (since $P_{cu} = x^2 P_{cu\text{-}fl}$)

Core loss $= 2143.75 \text{ W}$

$$\eta_{\max} = \frac{P_{o-\max}}{P_{o-\max} + P_{cu-\max} + P_m} \times 100 = \frac{67200}{67200 + 2143.75 + 2143.75} \times 100 = 94.00 \ \%$$

Example 5 – Solutions

c) Efficiency at full load and 0.8 pf lagging:

Fraction of full load $= x = 1$

Power output $= 120000 \times 1 \times 0.8 = 96000 \text{ W}$

Copper loss $= 4375 \text{ W}$

Core loss $= 2143.75 \text{ W}$

Efficiency $\eta_{fl} = \dfrac{P_{o-fl}}{P_{o-fl} + P_{cu-fl} + P_m} \times 100 = \dfrac{96000}{96000 + 4375 + 2143.75} \times 100 = 93.64 \ \%$

Example 5 – Solutions

d) Efficiency at half load and 0.8 pf:

Fraction of half load $= x = 0.5$

Power output $= 120000 \times 0.5 \times 0.8 = 48000 \text{ W}$

Copper loss $= 0.5^2 \times 4375 = 1093.75 \text{ W}$

Core loss $= 2143.75 \text{ W}$

$$\eta_{hl} = \frac{P_{o-hl}}{P_{o-hl} + P_{cu-hl} + P_m} \times 100 = \frac{48000}{48000 + 1093.75 + 2143.75} \times 100 = 93.68 \ \%$$

Summary

In this lecture, you have learnt:

- The evaluation of the transformer performance using the voltage regulation.
- The calculation of the core losses and copper losses in a practical transformer.
- The concepts in maximum efficiency and full-load efficiency to evaluate the transformer performance.

References

No.	Slide No.	Image	Reference
1	4, 6, 10, and 16	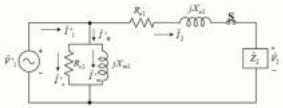	Reprinted from *Electric Machinery and Transformers, 3rd ed.*, (p. 223), by B. S. Guru, & H. R. Hiziroglu, 2001, New York, NY: Oxford University Press. Copyright 2001 by Oxford University Press.
2	7		Reprinted from *Electric Machinery and Transformers, 3rd ed.*, (p. 222), by B. S. Guru, & H. R. Hiziroglu, 2001, New York, NY: Oxford University Press. Copyright 2001 by Oxford University Press.
3	12	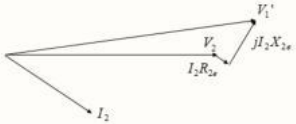	Reprinted from *AC Circuits and Machines*, (p. 159), by G. B. Shrestha, & M. H. Haque, 2006, Singapore: Pearson Education South Asia Pte. Ltd. Copyright 2006 by Pearson Education South Asia Pte. Ltd. Reprinted with permission.

References

No.	Slide No.	Image	Reference
4	13	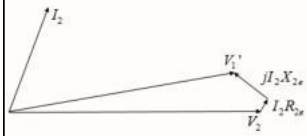	Reprinted from *AC Circuits and Machines*, (p. 159), by G. B. Shrestha, & M. H. Haque, 2006, Singapore: Pearson Education South Asia Pte. Ltd. Copyright 2006 by Pearson Education South Asia Pte. Ltd. Reprinted with permission.
5	15	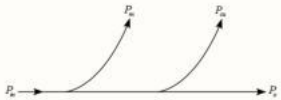	Reprinted from *Electric Machinery and Transformers, 3rd ed.*, (p. 228), by B. S. Guru, & H. R. Hiziroglu, 2001, New York, NY: Oxford University Press. Copyright 2001 by Oxford University Press.
6	16	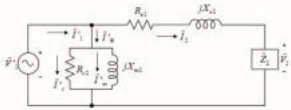	Reprinted from *Electric Machinery and Transformers, 3rd ed.*, (p. 223), by B. S. Guru, & H. R. Hiziroglu, 2001, New York, NY: Oxford University Press. Copyright 2001 by Oxford University Press.

References

No.	Slide No.	Image	Reference
7	17	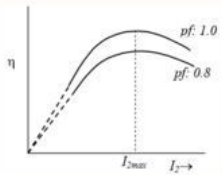	Reprinted from *AC Circuits and Machines*, (p. 163), by G. B. Shrestha, & M. H. Haque, 2006, Singapore: Pearson Education South Asia Pte. Ltd. Copyright 2006 by Pearson Education South Asia Pte. Ltd. Reprinted with permission.
8	18	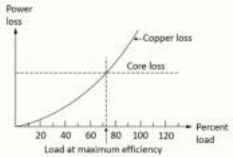	Reprinted from *Electric Machinery and Transformers, 3rd ed.*, (p. 229), by B. S. Guru, & H. R. Hiziroglu, 2001, New York, NY: Oxford University Press. Copyright 2001 by Oxford University Press.

Lecture 11: Transformers

EE3010: Electrical Devices and Machines

School of Electrical and Electronic Engineering

Associate Professor So Ping Lam
Tel: +65 6790 5026 | Email: eplso@ntu.edu.sg

Disclaimer

The preceding/ following videos contain slides with materials that were originally used for delivery in lecture halls and/ or classrooms in Nanyang Technological University. They might contain adapted materials. While every effort has been made to undertake due diligence to identify the original source, this was not always possible for all materials. The videos are used solely for educational purposes to support the Technology-Enhanced Learning (TEL) aspects of the course. TEL is hosted and deployed in NTULearn and i-NTULearn, a learning management system accessed by students at NTU assigned with a user ID and password. This disclaimer states that no copyright infringement was intended. Should any disagreement or dispute arise, including any claims to rightful ownership, kindly contact CITS, NTU, at +65 6790 5231.

Learning Objectives

By the end of this lecture, you should be able to:

- Explain how open-circuit test and short-circuit test are carried out to determine the transformer shunt parameters R_c and X_m and the transformer series parameters R_e and X_e respectively.
- Apply the shunt and series parameters obtained to develop the approximate equivalent circuits referred to the low-voltage side and the high-voltage side.
- Perform analysis on the approximate equivalent circuits to evaluate the transformer performance.

Transformer Testing: Determination of Parameters

❖ Open-circuit (OC) Test

- This test is carried out to determine the shunt parameters R_c and X_m of the transformer. The connection diagram of the test setup is shown in Fig. 37.
- One winding, usually the high-voltage side, is left open. The low-voltage side is supplied with rated voltage at rated frequency.

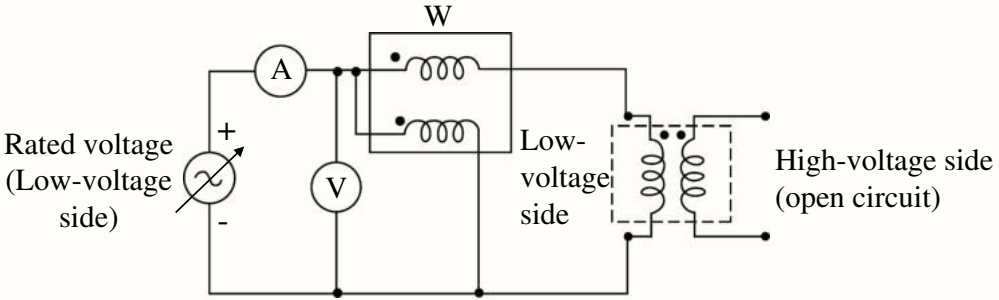

Fig. 37. The connection diagram of the test setup.

Transformer Testing: Determination of Parameters

- The wattmeter, the voltmeter, and the ammeter connected as shown in Fig. 37 are used to record:
  - The applied rated voltage (V_{oc}) V
  - The power input (P_{oc}) W
  - The current drawn (I_{oc}) A

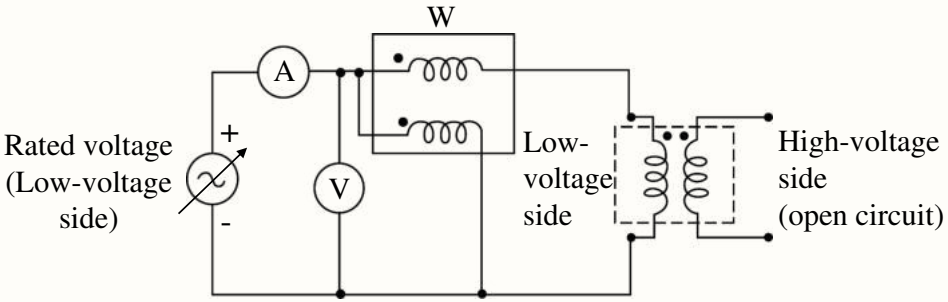

Fig. 37. The connection diagram of the test setup.

Transformer Testing: Determination of Parameters

- The approximate equivalent circuit for the circuit connection during OC test is shown in Fig. 38. Since the test is conducted on the low-voltage (lv) side, the parameters obtained will be the effective value referred to the lv (L) side.

- All the power input during the test is consumed by R_{cL}. Since

$$P_{oc} = \frac{V_{oc}^2}{R_{cL}} \Rightarrow R_{cL} = \frac{V_{oc}^2}{P_{oc}}$$

Then, $I_c = \dfrac{V_{oc}}{R_{cL}}$ A

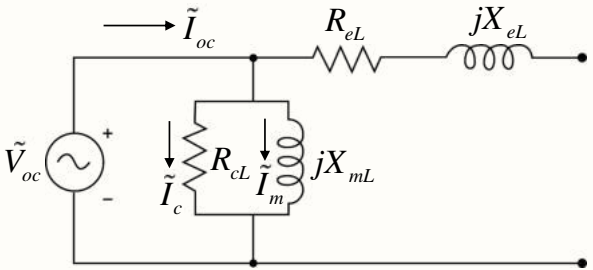

Fig. 38. The approximate equivalent circuit for the circuit connection during OC test.

Transformer Testing: Determination of Parameters

- The phasor relationship between the currents I_c, I_m, and I_{oc} is shown in Fig. 39. Clearly,

$$I_{oc}^2 = I_c^2 + I_m^2 \;\Rightarrow\; I_m = \sqrt{I_{oc}^2 - I_c^2}$$

- Then, $X_{mL} = \dfrac{V_{oc}}{I_m}$

- Thus, the simple data collected from the OC test, V_{oc}, P_{oc} and I_{oc}, can be easily used to calculate the shunt parameters $\boldsymbol{R_{cL}}$ and $\boldsymbol{X_{mL}}$ of the transformer approximate equivalent circuit.

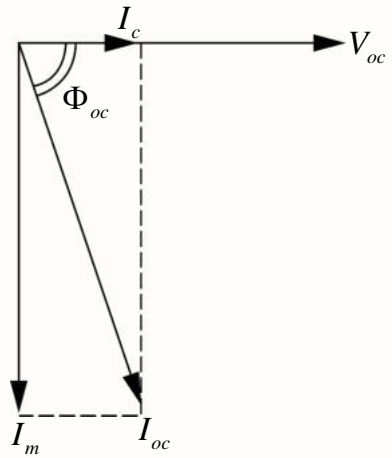

Fig. 39. The phasor diagram.

Transformer Testing: Determination of Parameters

❖ Short-circuit (SC) Test

- This test is carried out to determine the series parameters R_e and X_e of the transformer. The connection diagram of the test setup is shown in Fig. 40.

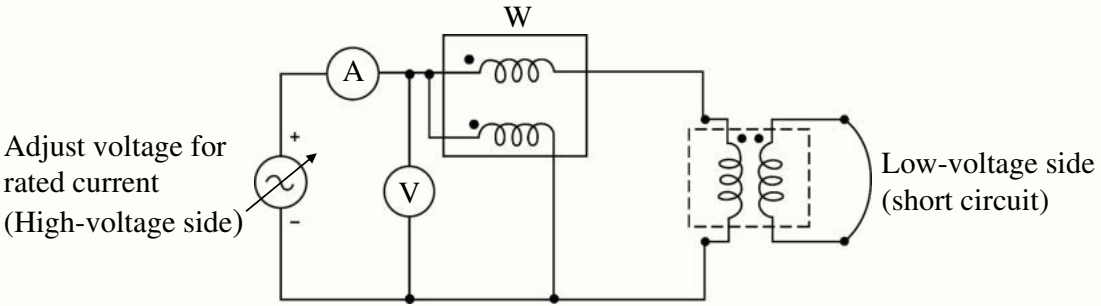

Fig. 40. The connection diagram of the test setup.

Transformer Testing: Determination of Parameters

- One winding, usually the low-voltage side, is short-circuited. The high-voltage side is supplied with a variable voltage source of the rated frequency. The input voltage is kept low (≈5 % of rated voltage), such that rated currents flow in the primary and secondary windings under the short-circuit test condition.
- The wattmeter, the voltmeter, and the ammeter connected as shown in Fig. 40 are used to record:
  - The applied **reduced** voltage (V_{sc}) V
  - The power input (P_{sc}) W
  - The current drawn (I_{sc}) A

Transformer Testing: Determination of Parameters

- The approximate equivalent circuit for the circuit connection during SC test is shown Fig. 41. The test is conducted on the high-voltage (hv) side, so the parameters obtained will be the effective values referred to the hv (H) side.

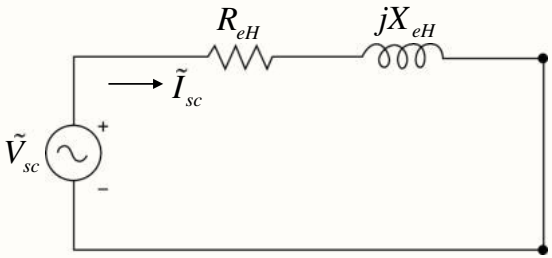

Fig. 41. The approximate equivalent circuit for the circuit connection during SC test.

- All the power input during the test is consumed by R_{eH}:

$$P_{sc} = I_{sc}^2 R_{eH} \Rightarrow R_{eH} = \frac{P_{sc}}{I_{sc}^2}$$

- Also, $Z_{eH} = \dfrac{V_{sc}}{I_{sc}}$, then, clearly: $Z_{eH}^2 = R_{eH}^2 + X_{eH}^2 \Rightarrow X_{eH} = \sqrt{Z_{eH}^2 - R_{eH}^2}$

Transformer Testing: Determination of Parameters

- Thus, the simple set of data collected from the SC test, V_{sc}, P_{sc} and I_{sc}, can be easily used to calculate the total effective values of the series parameters $\boldsymbol{R_{eH}}$ and $\boldsymbol{X_{eH}}$ of the transformer equivalent circuit.

- It must be noted that these two tests are generally conducted on two different sides of the transformer. Therefore, appropriate adjustments of the parameters are required to use them in the same common circuit.

Example 6

The following test data were collected from a 48-kVA, 4800/240-V, 50-Hz transformer:

	Voltage (V)	Current (A)	Power (W)
Open-circuit test	240	2	120
Short-circuit test	150	10	600

Determine the equivalent circuit of the transformer:

a) Referred to the low-voltage side.

b) Referred to the high-voltage side.

(Solutions →)

Example 6 – Solutions

OC test must be done at **rated voltage**.

Therefore, the OC test is conducted on the low-voltage (L) side, and

$V_{oc} = 240$ V, $I_{oc} = 2$ A, and $P_{oc} = 120$ W.

$$P_{oc} = \frac{V_{oc}^2}{R_{cL}} \Rightarrow R_{cL} = \frac{V_{oc}^2}{P_{oc}} = \frac{240^2}{120} = 480\ \Omega, \text{ and } I_c = \frac{V_{oc}}{R_{cL}} = \frac{240}{480} = 0.5\ \text{A}$$

Then,

$$I_m = \sqrt{I_{oc}^2 - I_c^2} = \sqrt{2^2 - 0.5^2} = 1.9365\ \text{A}, \text{and}$$

$$X_{mL} = \frac{V_{oc}}{I_m} = \frac{240}{1.9365} = 123.94\ \Omega$$

Example 6 – Solutions

SC test is done on the high-voltage (H) side, and

$V_{sc} = 150\text{ V}$, $I_{sc} = 10\text{A}$, and $P_{sc} = 600\text{ W}$

$$R_{eH} = \frac{P_{sc}}{I_{sc}^2} = \frac{600}{10^2} = 6\ \Omega, \text{and } Z_{eH} = \frac{V_{sc}}{I_{sc}} = \frac{150}{10} = 15\ \Omega$$

$$X_{eH} = \sqrt{Z_{eH}^2 - R_{eH}^2} = \sqrt{15^2 - 6^2} = 13.75\ \Omega$$

Now, the turns ratio of the transformer $a = \dfrac{4800}{240} = 20$

Therefore, $R_{eH} = 6\ \Omega \Rightarrow R_{eL} = \left(\dfrac{1}{a^2}\right) R_{eH} = \dfrac{1}{20^2} \times 6 = 0.015\ \Omega = 15\text{ m}\Omega$

Example 6 – Solutions

$$X_{eH} = 13.75\ \Omega \Rightarrow X_{eL} = \left(\frac{1}{a^2}\right) X_{eH} = \frac{1}{20^2} \times 13.75 = 0.0344\ \Omega = 34.4\ \text{m}\Omega$$

$$R_{cL} = 480\ \Omega \Rightarrow R_{cH} = a^2 R_{cL} = 20^2 \times 480 = 192\ \text{k}\Omega$$

$$X_{mL} = 123.94\ \Omega \Rightarrow X_{mH} = a^2 X_{mL} = 20^2 \times 123.94 = 49.58\ \text{k}\Omega$$

The approximate equivalent circuits can now be drawn (see Figs. 42 and 43) as follows:

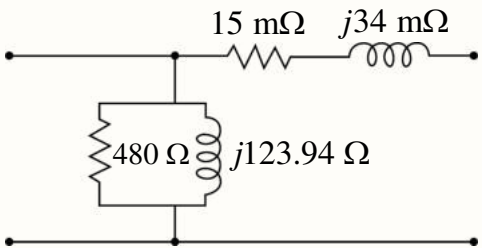

Fig. 42. Referred to low-voltage side.

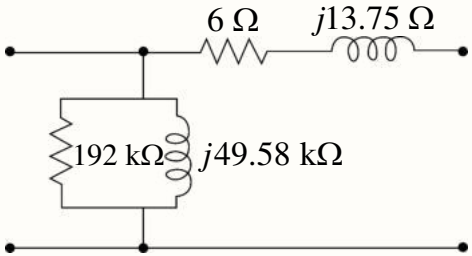

Fig. 43. Referred to high-voltage side.

Summary

In this lecture, you have learnt:

- The transformer testing on open-circuit test and short-circuit test to determine the transformer shunt parameters R_c and X_m and the transformer series parameters R_e and X_e.
- The concepts of using the shunt and series parameters to develop the approximate equivalent circuits referred to the low-voltage side and the high-voltage side.
- Analysis on the approximate equivalent circuits to evaluate the transformer performance.

References

No.	Slide No.	Image	Reference
1	4 and 5	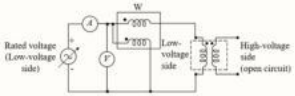	Reprinted from *Electric Machinery and Transformers, 3rd ed.*, (p. 233), by B. S. Guru, & H. R. Hiziroglu, 2001, New York, NY: Oxford University Press. Copyright 2001 by Oxford University Press.
2	6	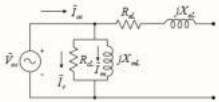	Reprinted from *Electric Machinery and Transformers, 3rd ed.*, (p. 233), by B. S. Guru, & H. R. Hiziroglu, 2001, New York, NY: Oxford University Press. Copyright 2001 by Oxford University Press.
3	7	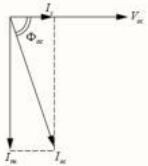	Reprinted from *Electric Machinery and Transformers, 3rd ed.*, (p. 234), by B. S. Guru, & H. R. Hiziroglu, 2001, New York, NY: Oxford University Press. Copyright 2001 by Oxford University Press. Reprinted with permission.

References

No.	Slide No.	Image	Reference
4	8	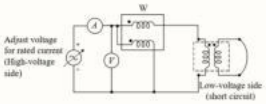	Reprinted from *Electric Machinery and Transformers, 3rd ed.*, (p. 235), by B. S. Guru, & H. R. Hiziroglu, 2001, New York, NY: Oxford University Press. Copyright 2001 by Oxford University Press.
5	10	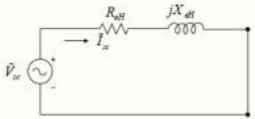	Reprinted from *Electric Machinery and Transformers, 3rd ed.*, (p. 236), by B. S. Guru, & H. R. Hiziroglu, 2001, New York, NY: Oxford University Press. Copyright 2001 by Oxford University Press.
6	15	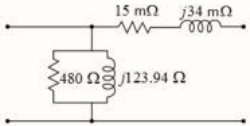	Reprinted from *Electric Machinery and Transformers, 3rd ed.*, (p. 238), by B. S. Guru, & H. R. Hiziroglu, 2001, New York, NY: Oxford University Press. Copyright 2001 by Oxford University Press.

References

No.	Slide No.	Image	Reference
7	15	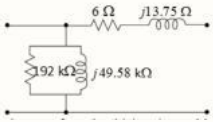	Reprinted from *Electric Machinery and Transformers, 3rd ed.*, (p. 238), by B. S. Guru, & H. R. Hiziroglu, 2001, New York, NY: Oxford University Press. Copyright 2001 by Oxford University Press.

Lecture 12: Transformers

EE3010: Electrical Devices and Machines

School of Electrical and Electronic Engineering

Associate Professor So Ping Lam
Tel: +65 6790 5026 | Email: eplso@ntu.edu.sg

Disclaimer

The preceding/ following videos contain slides with materials that were originally used for delivery in lecture halls and/or classrooms in Nanyang Technological University. They might contain adapted materials. While every effort has been made to undertake due diligence to identify the original source, this was not always possible for all materials. The videos are used solely for educational purposes to support the Technology-Enhanced Learning (TEL) aspects of the course. TEL is hosted and deployed in NTULearn and i-NTULearn, a learning management system accessed by students at NTU assigned with a user ID and password. This disclaimer states that no copyright infringement was intended. Should any disagreement or dispute arise, including any claims to rightful ownership, kindly contact CITS, NTU, at +65 6790 5231.

Learning Objectives

By the end of this lecture, you should be able to:

- Describe the design and operating principles of autotransformers.
- Analyse an autotransformer to determine the power transferred by induction and the power delivered by conduction.
- Explain how the autotransformers can transfer more power capacity than the conventional two-winding transformers.
- Apply the operating principles of three-phase transformer banks and three-phase transformers in power supply systems.

Autotransformer

- In normal transformers, the windings are electrically isolated and the energy transfer from one winding to another occurs completely through magnetic induction as shown in Fig. 44.

$$\frac{E_1}{E_2} = \frac{I_2}{I_1} = a = \frac{N_1}{N_2}, \text{ and } E_1 I_1 = E_2 I_2 = S$$

is the total power delivered through induction.

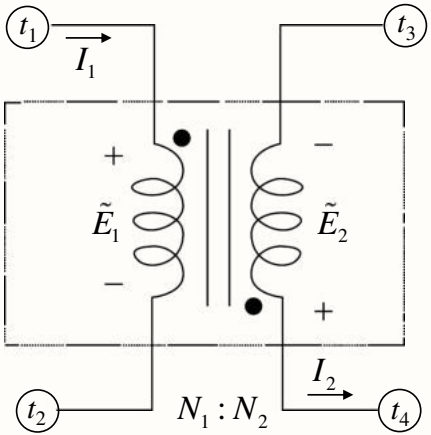

Fig. 44. Two-winding transformer.

Autotransformer

- The windings of a transformer can, however, be electrically connected, so that the energy transfer may occur both through **conduction**, as well as magnetic **induction**. Then, the total power delivered can be enhanced (increased) by making proper electrical connections between the two windings. Transformers with such connections are called **autotransformers**.

- Commonly, the two-windings are connected in series. Then
  - Any two terminals may be the input, and
  - Any two terminals may be the output.

- With proper connections, it is possible to achieve several combinations of input-output voltages from a single two-winding transformer.

Autotransformer

❖ Four common autotransformer configurations:

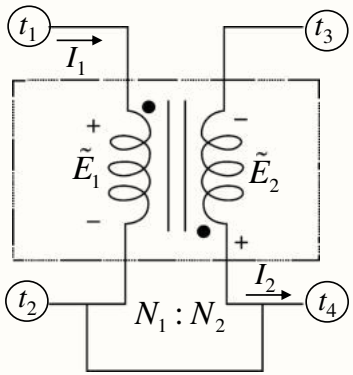

Fig. 45. Two-winding transformer.

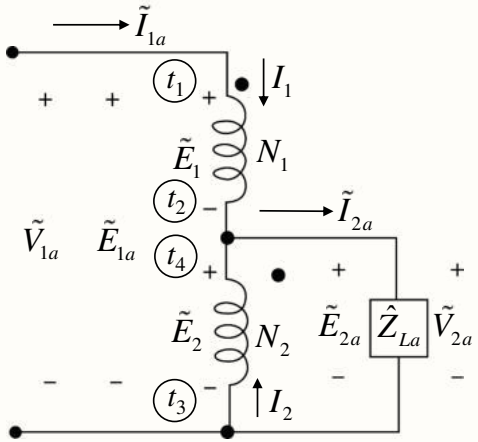

Fig. 46. Configuration 1: $(V_1+V_2)/V_2$ step-down connection.

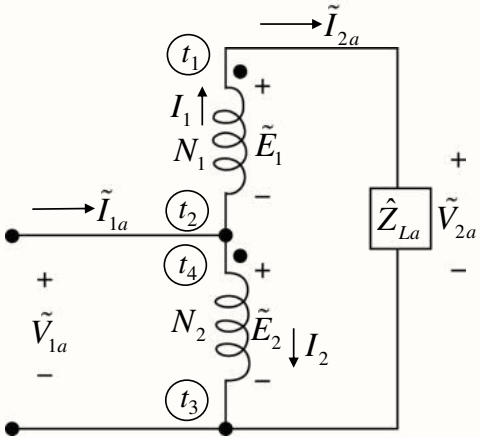

Fig. 47. Configuration 2: $V_2/(V_1+V_2)$ step-up connection.

Autotransformer

❖ Four common autotransformer configurations:

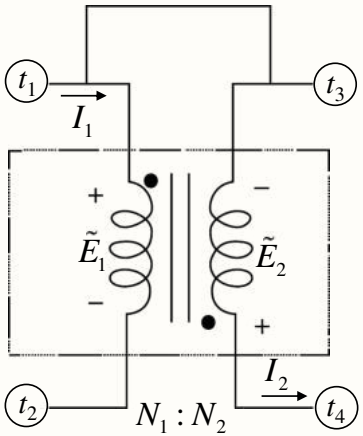

Fig. 48. Two-winding transformer.

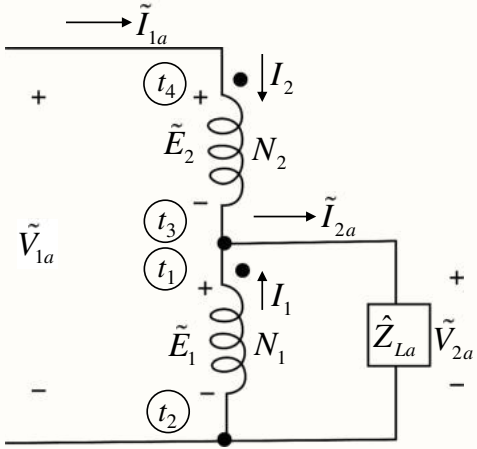

Fig. 49. Configuration 3: $(V_1+V_2)/V_1$ step-down connection.

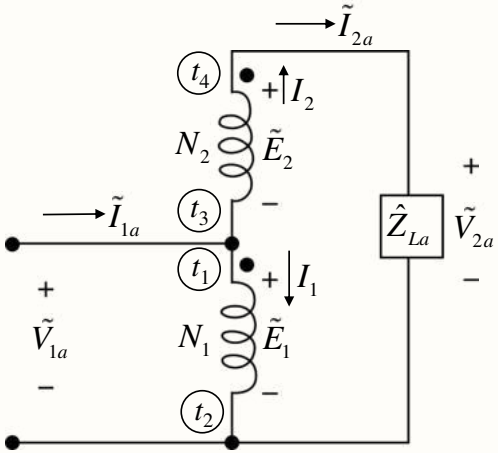

Fig. 50. Configuration 4: $V_1/(V_1+V_2)$ step-up connection.

Autotransformer

- One common form of autotransformer is a single winding transformer with a sliding point, with variable output voltage, as shown in Fig. 51.

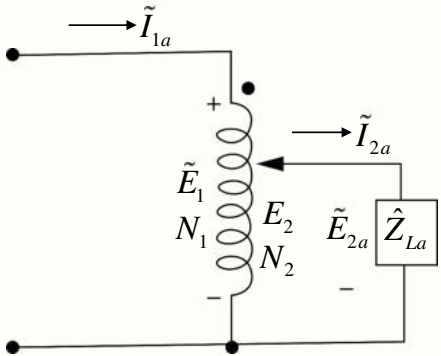

Fig. 51. A single winding transformer with variable output voltage.

Autotransformer

- Autotransformers offer several advantages:
  - They can deliver more power for the same size.
  - They provide several voltage transformation ratios - voltage flexibility.
  - They are more efficient.
  - They are cheaper.
  - They take lesser excitation current.
- Their main disadvantage is the loss of electrical isolation between the primary and the secondary windings.

Autotransformer Analysis

❖ Consider a particular autotransformer configuration, as shown in Fig. 53.

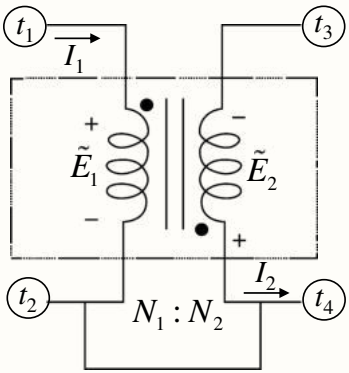

Fig. 52. Two-winding transformer.

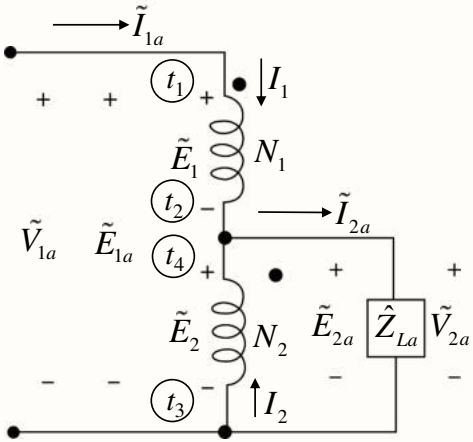

Fig. 53. Configuration 1: $(V_1+V_2)/V_2$ step-down connection.

Autotransformer Analysis

- The following notations are used in the analysis:
  - E_1 and I_1 are the winding 1 voltage and current.
  - E_2 and I_2 are the winding 2 voltage and current.
  - E_{1a} and I_{1a} are the autotransformer primary voltage and current.
  - E_{2a} and I_{2a} are the autotransformer secondary voltage and current.

Autotransformer Analysis

- For the two-winding transformer:
  - $$\frac{E_1}{E_2} = \frac{I_2}{I_1} = \frac{N_1}{N_2} = a$$
  - $$E_1 I_1 = E_2 I_2 = S$$
  - If current enters the dotted terminal in one coil, the currents must come out of the dotted terminal in the other coil.

Autotransformer Analysis

❖ For the autotransformer,

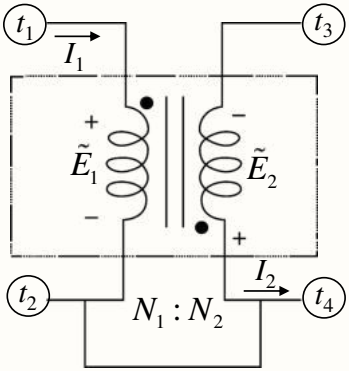

Fig. 54. Two-winding transformer.

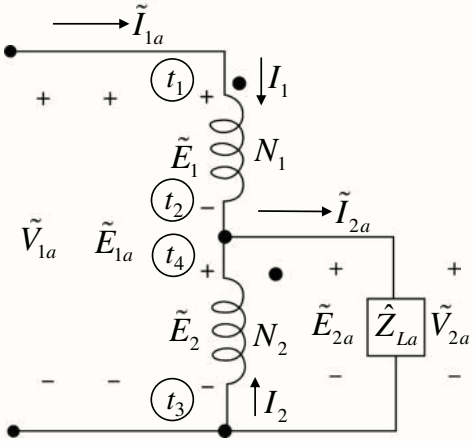

Fig. 55. Configuration 1: $(V_1+V_2)/V_2$ step-down connection.

Autotransformer Analysis

- The autotransformer voltage ratio is

$$\frac{V_{1a}}{V_{2a}} = \frac{E_1 + E_2}{E_2} = \frac{E_1}{E_2} + 1 = a + 1 \quad \left(\frac{E_{1a}}{E_{2a}} = \frac{E_1 + E_2}{E_2}\right)$$

- The autotransformer current ratio is

$$\frac{I_{2a}}{I_{1a}} = \frac{I_1 + I_2}{I_1} = 1 + \frac{I_2}{I_1} = 1 + a$$

Therefore,

$$\frac{V_{1a}}{V_{2a}} = \frac{I_{2a}}{I_{1a}} \Rightarrow V_{1a} I_{1a} = V_{2a} I_{2a}, \text{ i.e., } S_{1a} = S_{2a}$$

Autotransformer Analysis

- The input of the autotransformer is

$$S_{1a} = E_{1a} I_{1a} = (E_1 + E_2) I_1 = E_1 I_1 + E_2 I_1$$

- Similarly, the output of the autotransformer is

$$S_{2a} = E_{2a} I_{2a} = E_2 (I_1 + I_2) = E_2 I_2 + E_2 I_1$$

- The first terms of the input and the output of the autotransformer:

$$E_1 I_1 = E_2 I_2 = S$$

is the power transferred through regular transformer action, and is called the power transferred through **induction**.

Autotransformer Analysis

- The second term:

$$E_2 I_1 = (\frac{E_1}{a})\, I_1 = (\frac{1}{a}) E_1 I_1 = \frac{S}{a}$$

  is the additional power delivered because of the connection as autotransformer. This is the power delivered by **conduction**.

- The total power delivered by the autotransformer is thus:

$$S_{1a} = S_{2a} = S + \frac{S}{a}$$

- It should be noted that the rating, i.e., the capacity of the transformer is apparently enhanced by an amount S/a when connected as an autotransformer as shown in Fig. 55.

Autotransformer Analysis

- It can be seen through similar analyses of other autotransformer configurations that the rated power transfer by induction remains the same S for all configurations, while the rated power transfer by conduction is different for different configurations.

- Exercise: Analyse configurations of Figs. 47, 49 and 50, and determine the general expressions for power delivered through conduction for these configurations.

Example 7

A 24-kVA, 2400/240-V transformer is to be connected as an autotransformer. Sketch the different possible connections. For each connection, determine

a) the input voltage,

b) the output voltage,

c) the nominal rating of the autotransformer,

d) the power delivered conductively, and

e) The power transformed magnetically.

(Solutions →)

Example 7 – Solutions

Consider a possible connection shown in Fig. 57.

$E_1 = 2400\ \text{V},\ \ E_2 = 240\ \text{V}$

Turns ratio $a = \dfrac{2400}{240} = 10$

Power rating $S = 24\ \text{kVA}$

Therefore, the current ratings of the two-windings are

$$I_1 = \frac{S}{E_1} = 10\ \text{A, and}\ I_2 = \frac{S}{E_2} = 100\ \text{A}$$

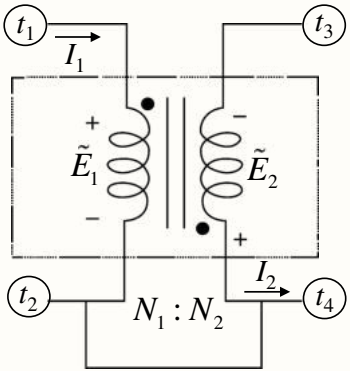

Fig. 56. Two-winding transformer.

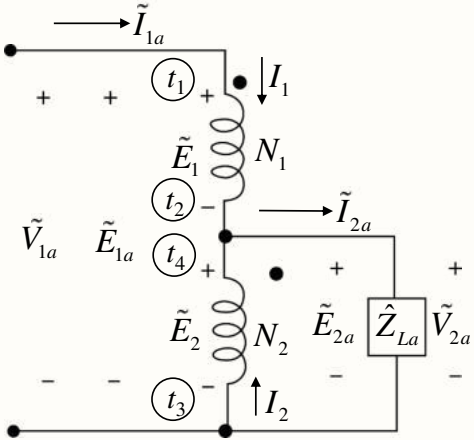

Fig. 57. Configuration 1: $(V_1+V_2)/V_2$ step-down connection.

Example 7 – Solutions

For the chosen configuration of the autotransformer:

a) Input voltage $= E_1 + E_2 = 2400 + 240 = 2640\ \text{V}$

b) Output voltage $= E_2 = 240\ \text{V}$

c) Rated value of the output current $I_{2a} = I_1 + I_2 = (10 + 100) = 110\ \text{A}$

Rated output power $E_2 I_{2a} = 240 \times 110 = 26.4\ \text{kVA}$

d) Power conducted directly $S_c = E_2 I_1 = 240 \times 10 = 2.4\ \text{kVA}$

e) Power transformed magnetically $S_m = E_1 I_1 = 2400 \times 10 = 24\ \text{kVA}$

Also, $S_m = E_2 I_2 = 240 \times 100 = 24\ \text{kVA}$

Example 7 – Solutions

- Note: Power transferable through induction will always be the transformer rating, while the power transferred through conduction will vary with the autotransformer configuration.
- Complete the solutions for Figs. 47, 49, and 50. Refer to the textbook.

Three-Phase Transformer Banks

- Most power systems utilise three-phase systems. A number of single-phase transformers may be interconnected and used in three-phase systems. Such systems are called **Transformer Banks**.

- The simplest transformer bank utilises three identical single-phase transformers as shown in Fig. 58. The primary and secondary windings can be connected either in **Star** or **Delta** configuration as necessary.

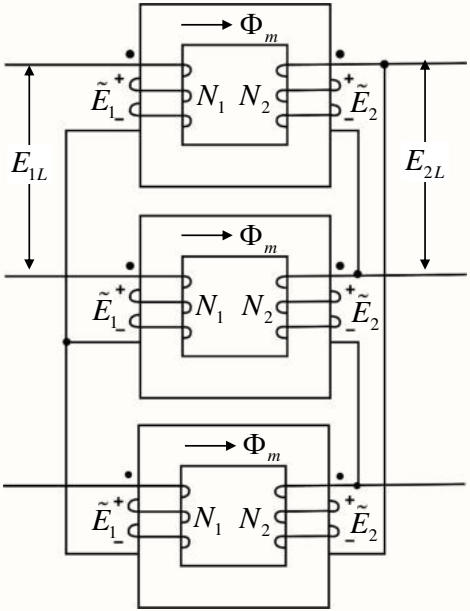

Fig. 58. Three-phase transformer bank.

Three-Phase Transformer Banks

- Note that a transformer bank consists of three separate one phase transformers. There is no common magnetic core. Electrical connections are made externally.
- The ratings of the transformer bank have to be specified by stating the rating of one of the three single-phase transformers.
  - E.g., a transformer bank of 3 x 1-phase, 10 kVA, 440/220 V transformers.

Three-Phase Transformers

- Three-phase transformer has a common magnetic core with three primary and three secondary windings so that they can be connected to three-phase systems, both at the input as well as the output terminals. The magnetic core may be of two types as shown in Figs. 59 and 60.
  - Shell Type
  - Core Type

Three-Phase Transformers

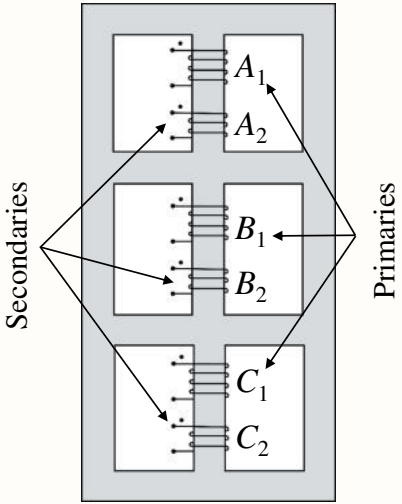

Fig. 59. Shell type three-phase transformer construction.

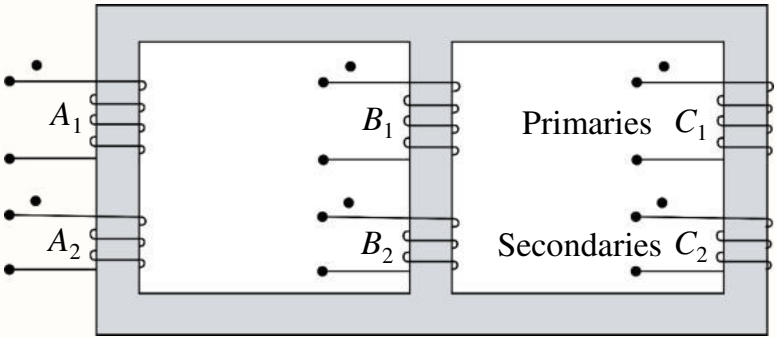

Fig. 60. Core type three-phase transformer construction.

Summary

In this lecture, you have learnt:

- The design and operating principles of autotransformers.
- Analysis of autotransformers to determine the power transferred by induction and the power delivered by conduction.
- The more power transfer capacity of autotransformers than the conventional two-winding transformers.
- The construction of three-phase transformer banks and three-phase transformers.

References

No.	Slide No.	Image	Reference
1	6, 10, 13 and 19	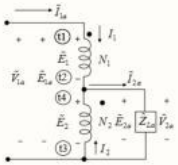	Reprinted from *Electric Machinery and Transformers, 3rd ed.*, (p. 246), by B. S. Guru, & H. R. Hiziroglu, 2001, New York, NY: Oxford University Press. Copyright 2001 by Oxford University Press.
2	6	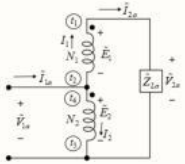	Reprinted from *Electric Machinery and Transformers, 3rd ed.*, (p. 246), by B. S. Guru, & H. R. Hiziroglu, 2001, New York, NY: Oxford University Press. Copyright 2001 by Oxford University Press.
3	7	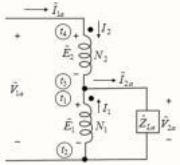	Reprinted from *Electric Machinery and Transformers, 3rd ed.*, (p. 246), by B. S. Guru, & H. R. Hiziroglu, 2001, New York, NY: Oxford University Press. Copyright 2001 by Oxford University Press.

References

No.	Slide No.	Image	Reference
4	7	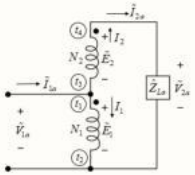	Reprinted from *Electric Machinery and Transformers, 3rd ed.*, (p. 246), by B. S. Guru, & H. R. Hiziroglu, 2001, New York, NY: Oxford University Press. Copyright 2001 by Oxford University Press.
5	8	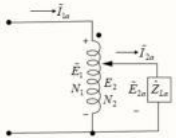	Reprinted from *Electric Machinery and Transformers, 3rd ed.*, (p. 246), by B. S. Guru, & H. R. Hiziroglu, 2001, New York, NY: Oxford University Press. Copyright 2001 by Oxford University Press.
6	25	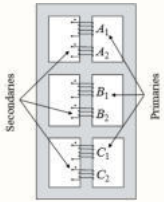	Reprinted from *Electric Machinery and Transformers, 3rd ed.*, (p. 254), by B. S. Guru, & H. R. Hiziroglu, 2001, New York, NY: Oxford University Press. Copyright 2001 by Oxford University Press.

References

No.	Slide No.	Image	Reference
7	25	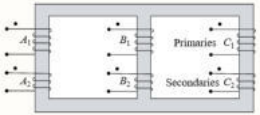	Reprinted from *Electric Machinery and Transformers, 3rd ed.*, (p. 254), by B. S. Guru, & H. R. Hiziroglu, 2001, New York, NY: Oxford University Press. Copyright 2001 by Oxford University Press.

Lecture 13: Transformers

EE3010: Electrical Devices and Machines

School of Electrical and Electronic Engineering

Associate Professor So Ping Lam
Tel: +65 6790 5026 | Email: eplso@ntu.edu.sg

Disclaimer

The preceding/ following videos contain slides with materials that were originally used for delivery in lecture halls and/ or classrooms in Nanyang Technological University. They might contain adapted materials. While every effort has been made to undertake due diligence to identify the original source, this was not always possible for all materials. The videos are used solely for educational purposes to support the Technology-Enhanced Learning (TEL) aspects of the course. TEL is hosted and deployed in NTULearn and i-NTULearn, a learning management system accessed by students at NTU assigned with a user ID and password. This disclaimer states that no copyright infringement was intended. Should any disagreement or dispute arise, including any claims to rightful ownership, kindly contact CITS, NTU, at +65 6790 5231.

Learning Objectives

By the end of this lecture, you should be able to:

- Analyse the performance of three-phase transformer banks and three-phase transformers using the one phase star equivalent circuit or one phase Y-Y equivalent circuit.
- Calculate the power rating and voltage rating of three-phase transformer banks.
- Apply the principles and concepts learnt to solve three-phase transformer bank problems and three-phase transformer problems.

Analysis of Three-Phase Transformers

- Both three-phase transformer banks and three-phase transformers can be analysed by considering **one phase star equivalent circuit** of the transformer.

- **Transformer Banks:**
  - Consider the three-phase transformer bank as shown in Fig. 61 . The rating is known for single-phase transformer, e.g., $S_{1\text{-}ph}$, E_1 / E_2.

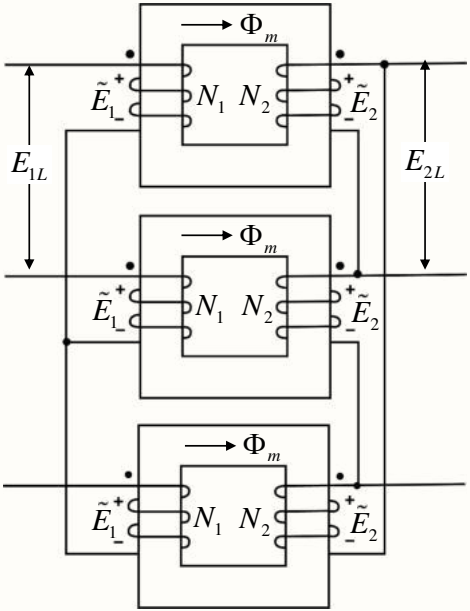

Fig. 61. Three-phase transformer bank.

Analysis of Three-Phase Transformers

- **To obtain the rating of the three-phase transformer bank**:
  - The power rating of the three-phase bank will be three times larger:

    $$S_{3-ph\ bank} = 3 \times S_{1-ph}$$

  - The line voltage will be the same if connected in delta, but larger by a factor of $\sqrt{3}$ if connected in star. For this example:

    $E_{1L} = \sqrt{3} \times E_1$, and $E_{2L} = E_2$

Analysis of Three-Phase Transformers

- **To form the one phase star equivalent circuit**:

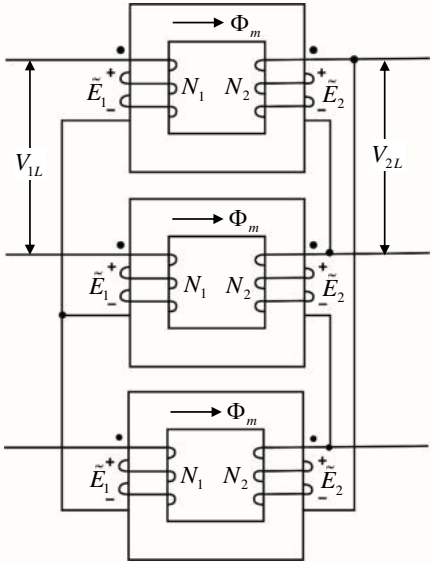

Fig. 62. Three-phase transformer bank.

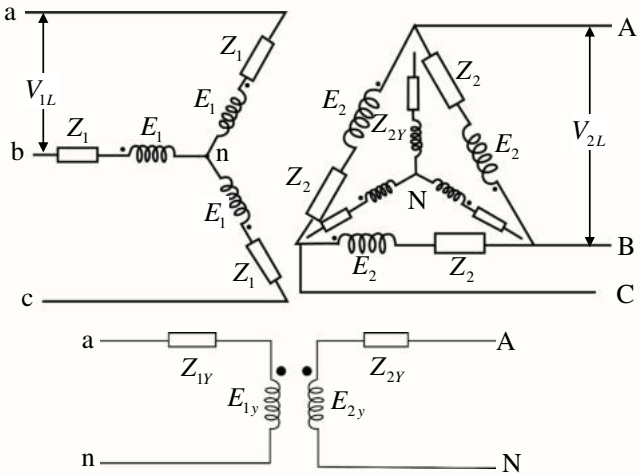

Fig. 63. One phase star equivalent circuit or one phase Y-Y equivalent circuit.

Reproduced with permission from [9789810676575, G. B. Shrestha and M. H. Haque, *AC Circuits and Machines*; Pearson Education South Asia Pte. Ltd.]

Analysis of Three-Phase Transformers

- **To form the one phase star equivalent circuit**:
  - The star equivalent phase voltages are obtained from the line voltages:

    $$V_{1Y} = V_{an} = \frac{V_{1L}}{\sqrt{3}}, \quad V_{2Y} = V_{AN} = \frac{V_{2L}}{\sqrt{3}}$$

    Turns ratio $a = V_{1Y}/V_{2Y}$ will depend on whether the windings are connected in star or in delta.

  - The impedance per phase remains the same if it was star connected, but should be reduced by a factor of three if it is delta connected $(Z_Y = Z_\Delta/3)$.

    $Z_{1Y} = Z_1$, and $Z_{2Y} = \dfrac{Z_2}{3}$

Example 8

Three identical single-phase transformers, each single-phase transformer rated at 12 kVA, 120/240 V, 60 Hz, are connected to form a three-phase step-up Y/Δ transformer bank. The parameters of the transformer are

$$R_1 = 0.0395\ \Omega,\ X_1 = 0.0615\ \Omega,\ R_2 = 0.1335\ \Omega,\ X_2 = 0.201\ \Omega.$$

a) What are the ratings of the three-phase transformer bank?

b) Find the input current and the input voltage of the transformer bank when it delivers the rated load at rated voltage and 0.8 pf lagging. Ignore no load current.

(Solutions →)

Example 8 – Solutions

a) Power rating of the bank: $S_3 = 3 \times 12 \text{ kVA} = 36 \text{ kVA}$

Line voltage on the primary $= \sqrt{3} \times 120 = 207.85 \text{ V}$ (Y connected)

Line voltage on the secondary $= 240 \text{ V}$ (Δ connected)

Ratings of the three-phase transformer bank: **36 kVA, 207.85/240 V, 60 Hz**

b) Consider a one phase star equivalent circuit:

Primary star equivalent phase voltage $= \dfrac{207.85}{\sqrt{3}} = 120 \text{ V} = V_{an} = V_{1Y}$

Secondary star equivalent phase voltage $= \dfrac{240}{\sqrt{3}} = 138.56 \text{ V} = V_{AN} = V_{2Y}$

Turns ratio $a = \dfrac{120}{138.56} = 0.866$

Example 8 – Solutions

Primary star phase impedance:

$$Z_{1Y} = 0.0395 + j0.0615\ \Omega$$

Secondary star phase impedance:

$$Z_{2Y} = \frac{0.1335 + j0.201}{3} = 0.0445 + j0.067\ \Omega$$

Referring to the secondary side:

$$Z_{e2} = R_{e2} + jX_{e2} = Z_{2Y} + \frac{Z_{1Y}}{a^2} = 0.0972 + j0.1590\ \Omega$$

Let $V_2 = 138.56\angle 0°$ V (**rated voltage as reference**)

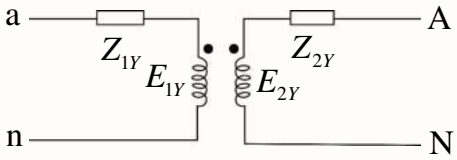

Fig. 64. One phase Y-Y equivalent circuit.

Reproduced with permission from [9789810676575, G. B. Shrestha and M. H. Haque, *AC Circuits and Machines*; Pearson Education South Asia Pte. Ltd.]

Example 8 – Solutions

$$\frac{\text{Rated load}}{\text{phase}} = \frac{36}{3} = 12 \text{ kVA}$$

$$\text{pf angle} = 36.87° \ (\mathbf{cos^{-1} 0.8})$$

$$\therefore S_2 = 12000\angle 36.87° \text{ VA}$$

Rated load current

$$I_2 = \frac{S_2^*}{V_2^*} = \frac{12000\angle -36.87°}{138.56\angle 0°} = 86.61\angle -36.87° \text{ A}$$

$$V_1' = V_2 + I_2(R_{e2} + jX_{e2})$$

$$= 138.56\angle 0° + 86.61\angle -36.87° \times (0.0972 + j0.1590) = 153.67\angle 2.23° \text{ V}$$

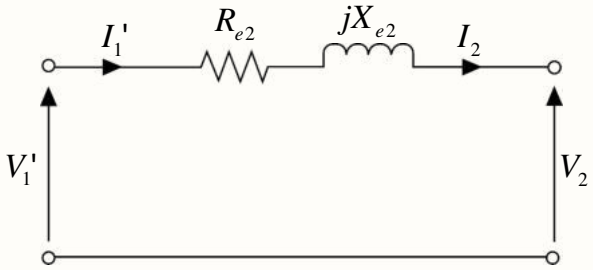

Fig. 65. Approximate equivalent circuit referred to the secondary side.

Reproduced with permission from [9789810676575, G. B. Shrestha and M. H. Haque, *AC Circuits and Machines*; Pearson Education South Asia Pte. Ltd.]

Example 8 – Solutions

Input star phase current $= I_1 = \dfrac{I_1'}{a} = \dfrac{I_2}{a} = \dfrac{86.61}{0.866} = 100\ \text{A}$ (**line current**)

Input star phase voltage $= V_1 = a \times V_1' = 0.866 \times 153.67 = 133.1\ \text{V}$

Input line voltage $= \sqrt{3}\, V_1 = \sqrt{3} \times 133.1 = 230.5\ \text{V}$

Three-Phase Transformers

- The ratings of the three-phase transformer are given in terms of total three-phase power and line voltages. To find the equivalent circuit for one phase star equivalent of a three-phase transformer:
  - The power rating of each phase will be only one third of the three-phase rating:

$$S_{1-ph} = \frac{S_{3-ph}}{3}$$

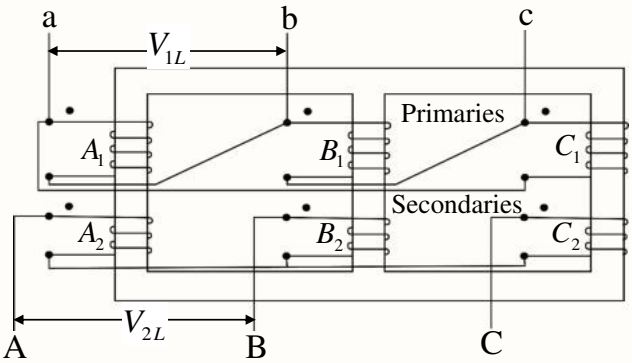

Fig. 66. Three-phase transformer.

Three-Phase Transformers

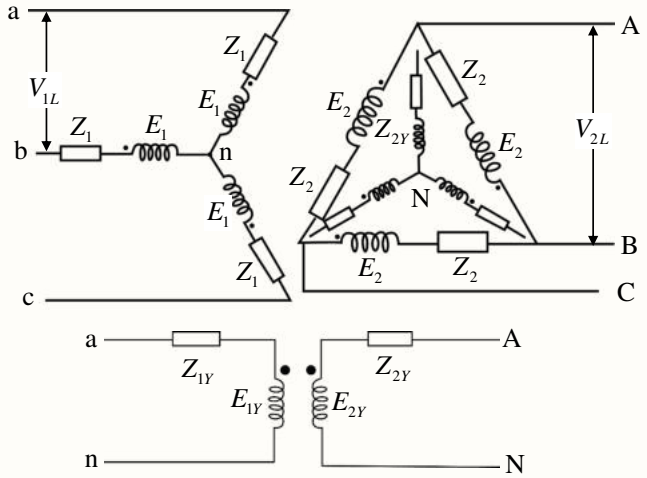

Fig. 67. One phase star equivalent circuit or one phase Y-Y equivalent circuit.

Reproduced with permission from [9789810676575, G. B. Shrestha and M. H. Haque, *AC Circuits and Machines;* Pearson Education South Asia Pte. Ltd.]

Three-Phase Transformers

- The star equivalent phase voltage will be smaller than the respective line voltage by a factor of ($1/\sqrt{3}$). This will be the voltage rating of the actual star phase voltage if the winding was connected in star. It will be the voltage rating of the star equivalent phase voltage if the winding was connected in delta.

$$V_{1Y} = V_{an} = \frac{V_{1L}}{\sqrt{3}}$$

$$V_{2Y} = V_{AN} = \frac{V_{2L}}{\sqrt{3}}$$

Turns ratio $a = \dfrac{V_{1Y}}{V_{2Y}} = \dfrac{V_{1L}/\sqrt{3}}{V_{2L}/\sqrt{3}} = \dfrac{V_{1L}}{V_{2L}}$

which does not depend on whether the windings are connected in star or in delta.

Three-Phase Transformers

- The impedance per phase remains the same if the winding is star connected, but it should be reduced by a factor of three if it is delta connected.

$$Z_Y = \frac{Z_\Delta}{3}$$

$$Z_{1Y} = \frac{Z_1}{3}, \text{ and } Z_{2Y} = Z_2$$

Example 9

The resistance and the leakage reactance of a three-phase, 300-kVA, 2400/208-V, Δ/Y, 50-Hz transformer are:

Primary winding	$R_1 = 0.4\ \Omega$	$X_1 = 1.6\ \Omega$
Secondary winding	$R_2 = 0.001\ \Omega$	$X_2 = 0.004\ \Omega$

Determine the input line voltage when the transformer delivers 300 kVA at 0.9 pf lagging with rated voltage across the load. Ignore no load current.

(Solutions →)

Example 9 – Solutions

Primary is Δ connected: $Z_{1\Delta} = (0.4 + j1.6)\ \Omega$

Secondary is Y connected: $Z_{2Y} = (0.001 + j0.004)\ \Omega$

For one phase Y-Y equivalent circuit:

$$Z_{1Y} = \frac{0.4 + j1.6}{3}\ \Omega$$

$$Z_{2Y} = (0.001 + j0.004)\ \Omega$$

$$V_{1Y} = V_{an} = \frac{2400}{\sqrt{3}}\ \text{V}$$

$$V_{2Y} = V_{AN} = \frac{208}{\sqrt{3}}\ \text{V}$$

Turns ratio $a = \dfrac{V_{1Y}}{V_{2Y}} = 11.5385$

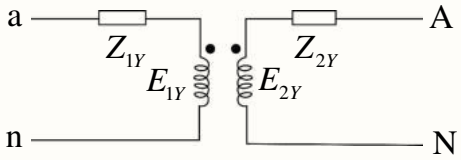

Fig. 68. One phase Y-Y equivalent circuit.

Reproduced with permission from [9789810676575, G. B. Shrestha and M. H. Haque, *AC Circuits and Machines*; Pearson Education South Asia Pte. Ltd.]

Example 9 – Solutions

Therefore, for the equivalent circuit, referred to the secondary side:

$$Z_{e2} = R_{e2} + jX_{e2} = Z_{2Y} + \left(\frac{1}{a^2}\right) Z_{1Y}$$

$$= 0.001 + j0.004 + \left(\frac{1}{a^2}\right)\left(\frac{0.4 + j1.6}{3}\right)$$

$$= 0.002 + j0.008 = 0.0082462\angle 75.96^\circ\ \Omega$$

Rated load per phase:

$$S_2 = \frac{300}{3} = 100 \text{ kVA at } 0.9 \text{ pf lagging}$$

$$= 100 \times 1000\angle 25.84^\circ \text{ VA } (\mathbf{\cos^{-1} 0.9 = 25.84^\circ})$$

Example 9 – Solutions

Let $V_2 = \frac{208}{\sqrt{3}} \angle 0° \text{ V}$ **(Rated voltage as reference)**

$$I_2 = \left(\frac{S_2}{V_2} \right)^*$$

$$= \frac{100 \times 1000 \angle -25.84°}{208/\sqrt{3} \angle 0°}$$

$$= 832.7 \angle -25.84° \text{ A}$$

Example 9 – Solutions

Therefore,

$$V_1' = V_2 + I_2(R_{e2} + jX_{e2})$$

$$= \frac{208}{\sqrt{3}}\angle 0° + 832.7\angle -25.84° \times 0.0082462\angle 75.96°$$

$$= 124.52\angle 2.43° \text{ V}$$

Therefore, $V_1 = a \times V_1' = 1436.77 \text{ V}$

Input line voltage $= \sqrt{3}V_1 = \sqrt{3} \times 1436.77 = 2488.6 \text{ V}$

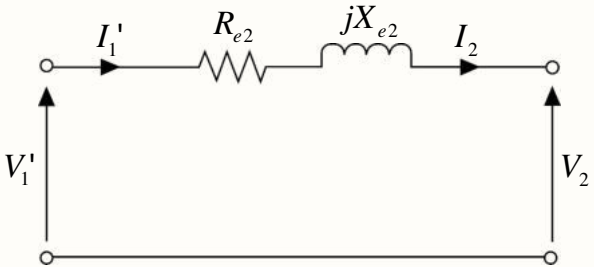

Fig. 69. Approximate equivalent circuit referred to the secondary side.

Reproduced with permission from [9789810676575, G. B. Shrestha and M. H. Haque, *AC Circuits and Machines*; Pearson Education South Asia Pte. Ltd.]

Summary

In this lecture, you have learnt:

- Analysis of the performance of three-phase transformer banks and three-phase transformers using the one phase star equivalent circuit or one phase Y-Y equivalent circuit.
- The calculation of the power rating and voltage rating of three-phase transformer banks.
- The principles and concepts to solve three-phase transformer bank problems and three-phase transformer problems.

References

No.	Slide No.	Image	Reference
3	6 and 14	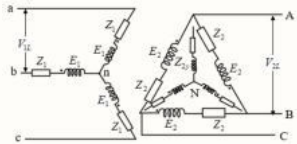	Reprinted from *AC Circuits and Machines*, (p. 182), by G. B. Shrestha, & M. H. Haque, 2006, Singapore: Pearson Education South Asia Pte Ltd. Copyright 2006 by Pearson Education South Asia Pte Ltd. Reprinted with permission.
4	6, 10, 14, and 18	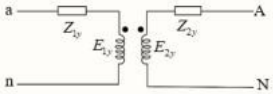	Reprinted from *AC Circuits and Machines*, (p. 182), by G. B. Shrestha, & M. H. Haque, 2006, Singapore: Pearson Education South Asia Pte Ltd. Copyright 2006 by Pearson Education South Asia Pte Ltd. Reprinted with permission.
5	11 and 21	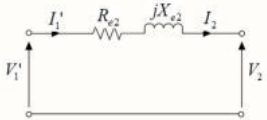	Reprinted from *AC Circuits and Machines*, (p. 185), by G. B. Shrestha, & M. H. Haque, 2006, Singapore: Pearson Education South Asia Pte Ltd. Copyright 2006 by Pearson Education South Asia Pte Ltd. Reprinted with permission.

References

No.	Slide No.	Image	Reference
6	13	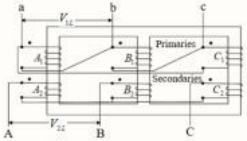	Reprinted from *Electric Machinery and Transformers, 3rd ed.*, (p. 254), by B. S. Guru, & H. R. Hiziroglu, 2001, New York, NY: Oxford University Press. Copyright 2001 by Oxford University Press.