THIS DOCUMENT AND THE DATA DISCLOSED HEREIN OR HEREWITH IS THE PROPERTY OF ALTIUM LIMITED AND MAY BE FREELY DISTRIBUTED IN WHOLE. NO RIGHTS ARE RESERVED OR EXPRESS OR IMPLIED WARANTEE GIVEN.

| DWG NO. | REV | SHT |
|---|---|---|
| 1 | | |

| REVISION | DESCRIPTION | DATE | APPROVED |
|---|---|---|---|
| | | | |

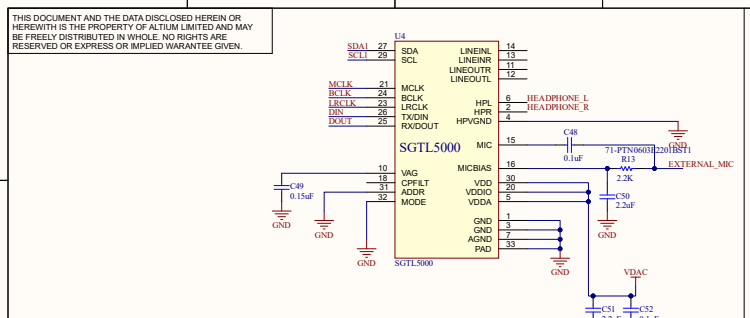


## Option 2: PCM5102PWR

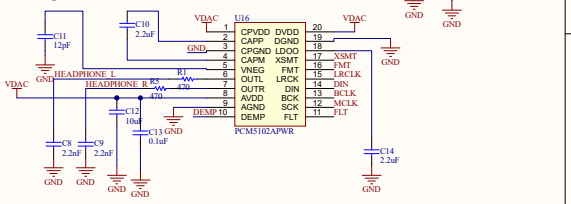


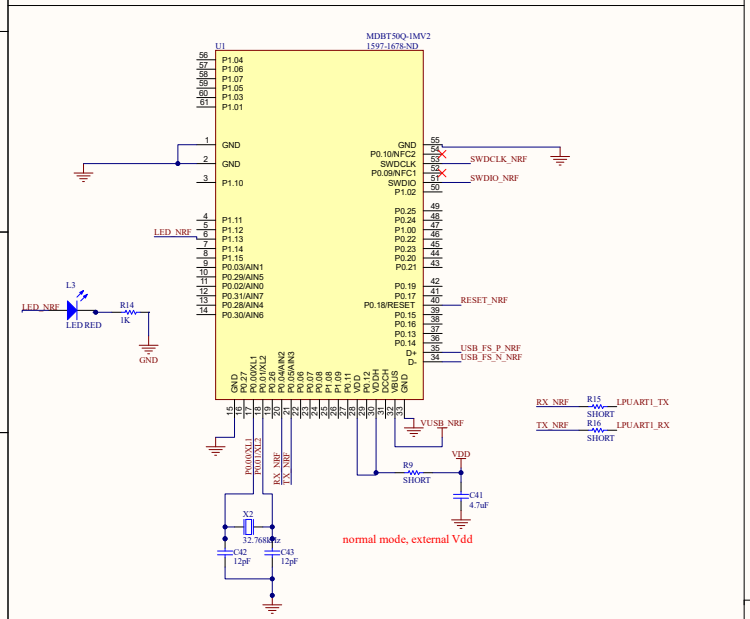


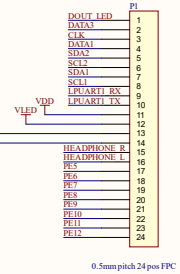


## IMU

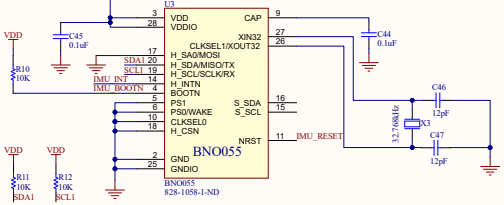


## DIGITAL MCU

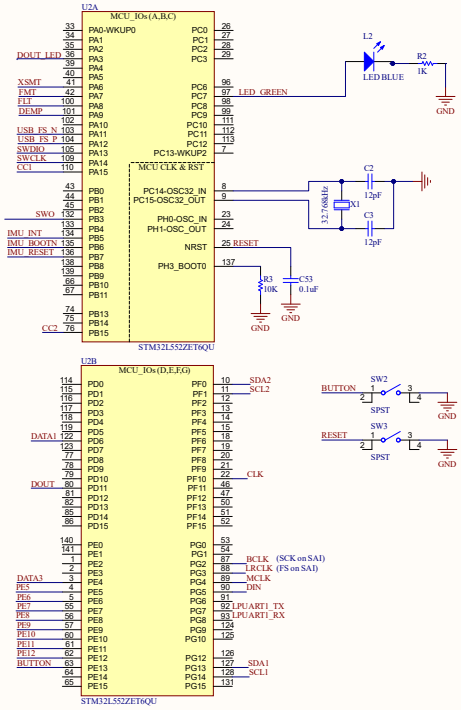


## I/O PORTS

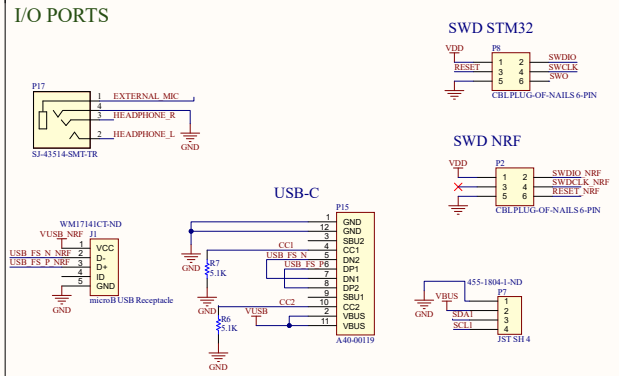


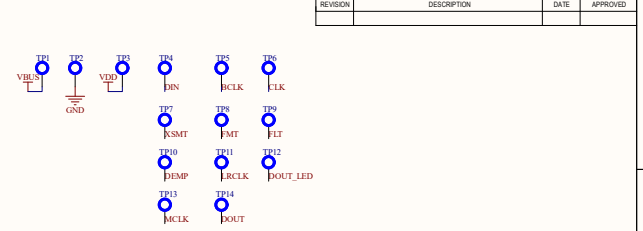


## POWER

### One cap for each VDD

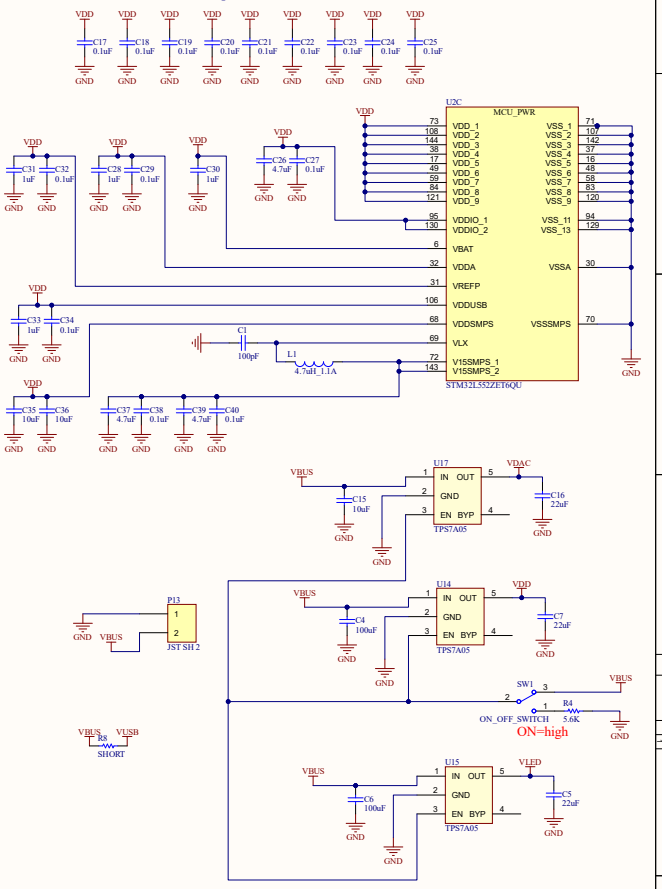


| APPROVALS | DATE |
|---|---|
| ENG: | |
| DSN: | |
| CHK: | |

REFERENCE DOCUMENTS

BOM:

ASSY DWG:

FAB DWG:

PCB DWG:

PROJECT

Altium

PROJECT REVISION: Not in version control

DOCUMENT REVISION: Not in version control

DESIGN ITEM:

TITLE: *

SIZE: C

CAGE CODE

DWG NO.

REV

SCALE:

FILE NAME: Schematic_multimic_main_board_rf.SchDoc

SHEET 1 OF 1