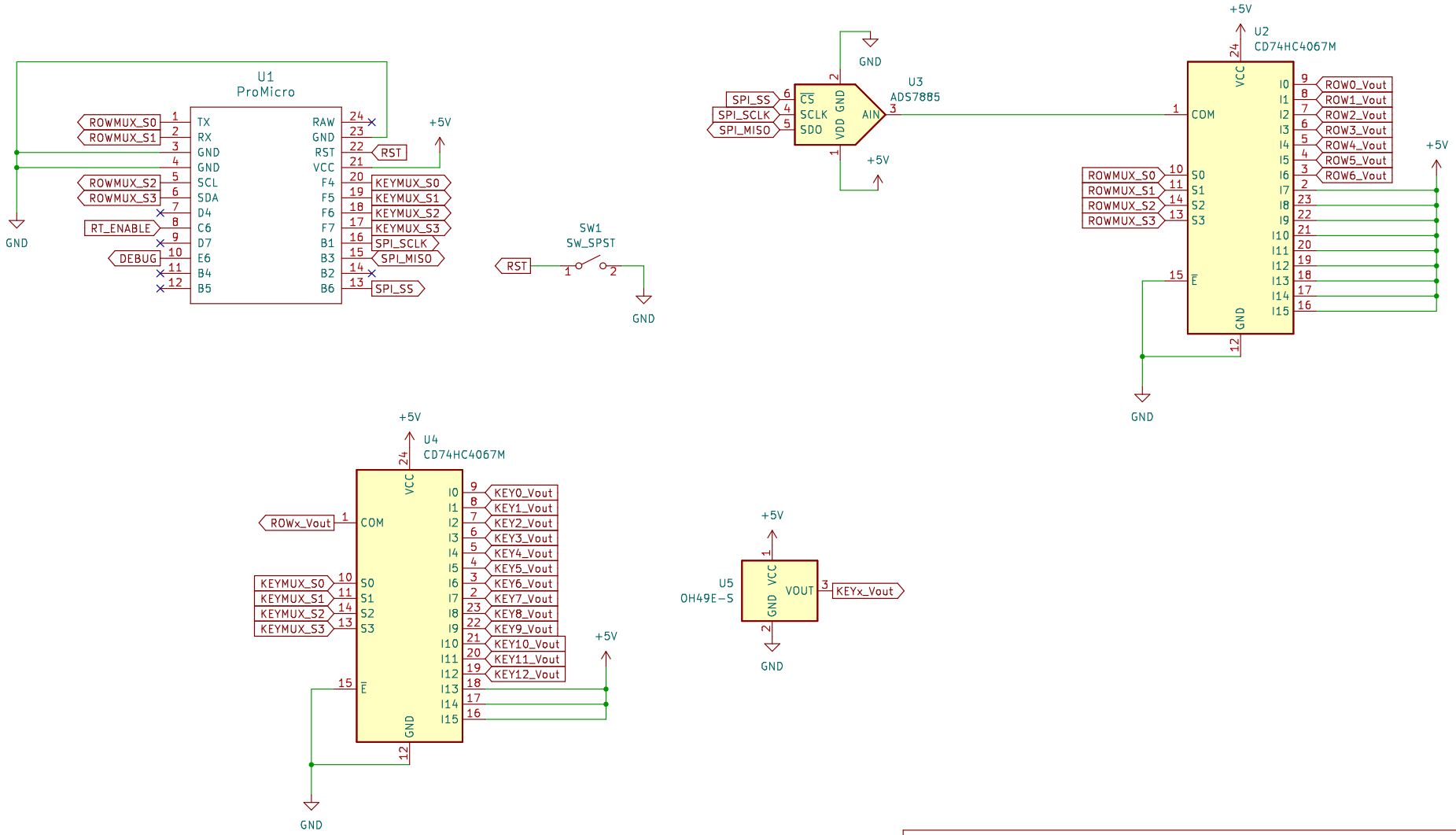

Copyright (c) Mingi Hwang 2025
Released under the MIT License.
BETA DESIGN. SUBJECT TO CHANGE.

Sheet: /
File: schem.kicad_sch

Title: GoonBoard75

Size: A4	Date: 2025-07-28	**Rev: beta 0.1**
KiCad E.D.A. kicad 7.0.11+dfsg-1build4		Id: 1/1