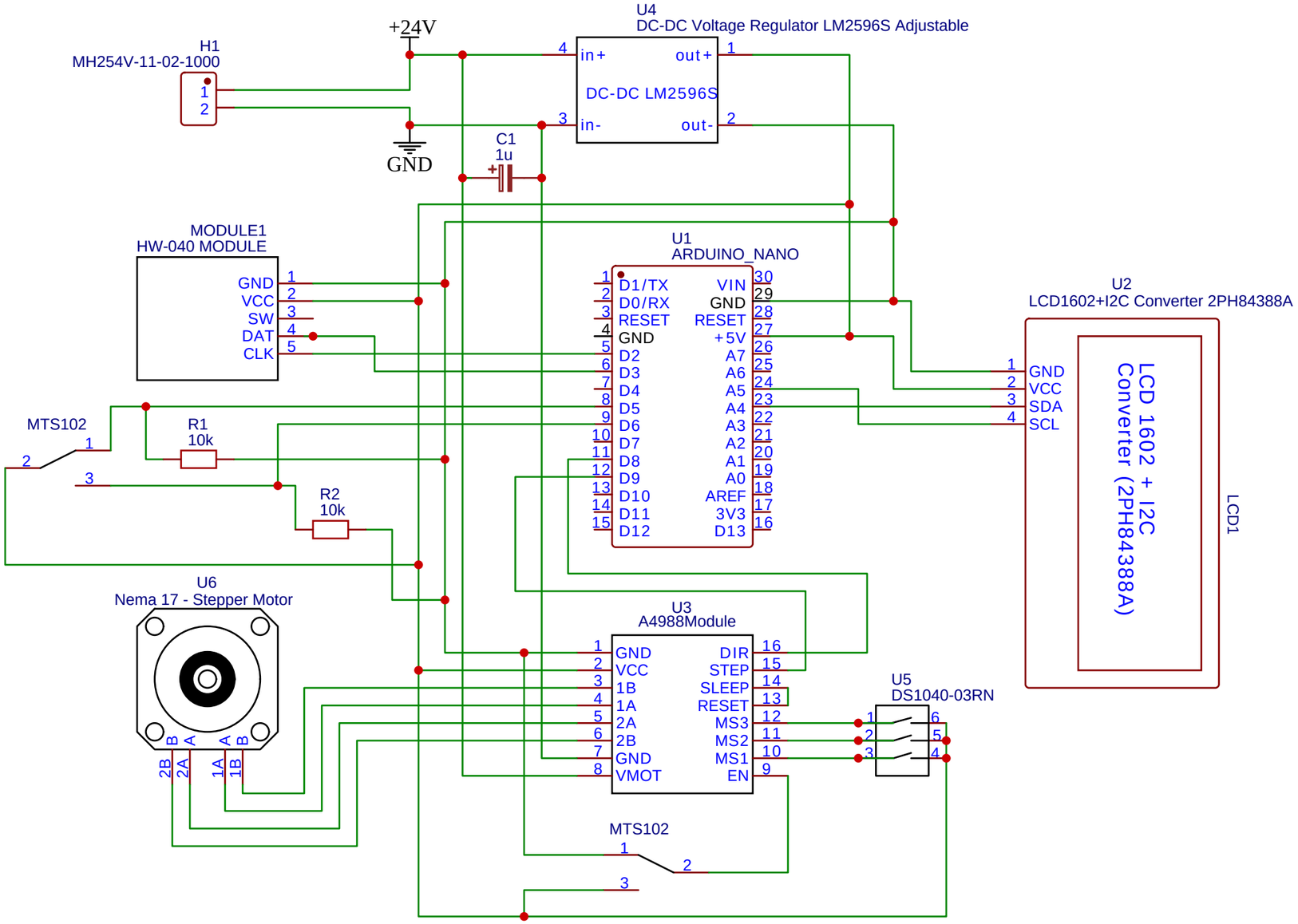

TITLE: Ram Extruder		REV: 1.0
	Company: Evgeny Gorborukov	Sheet: 1/1
	Date: 2022-05-15 Drawn By:	