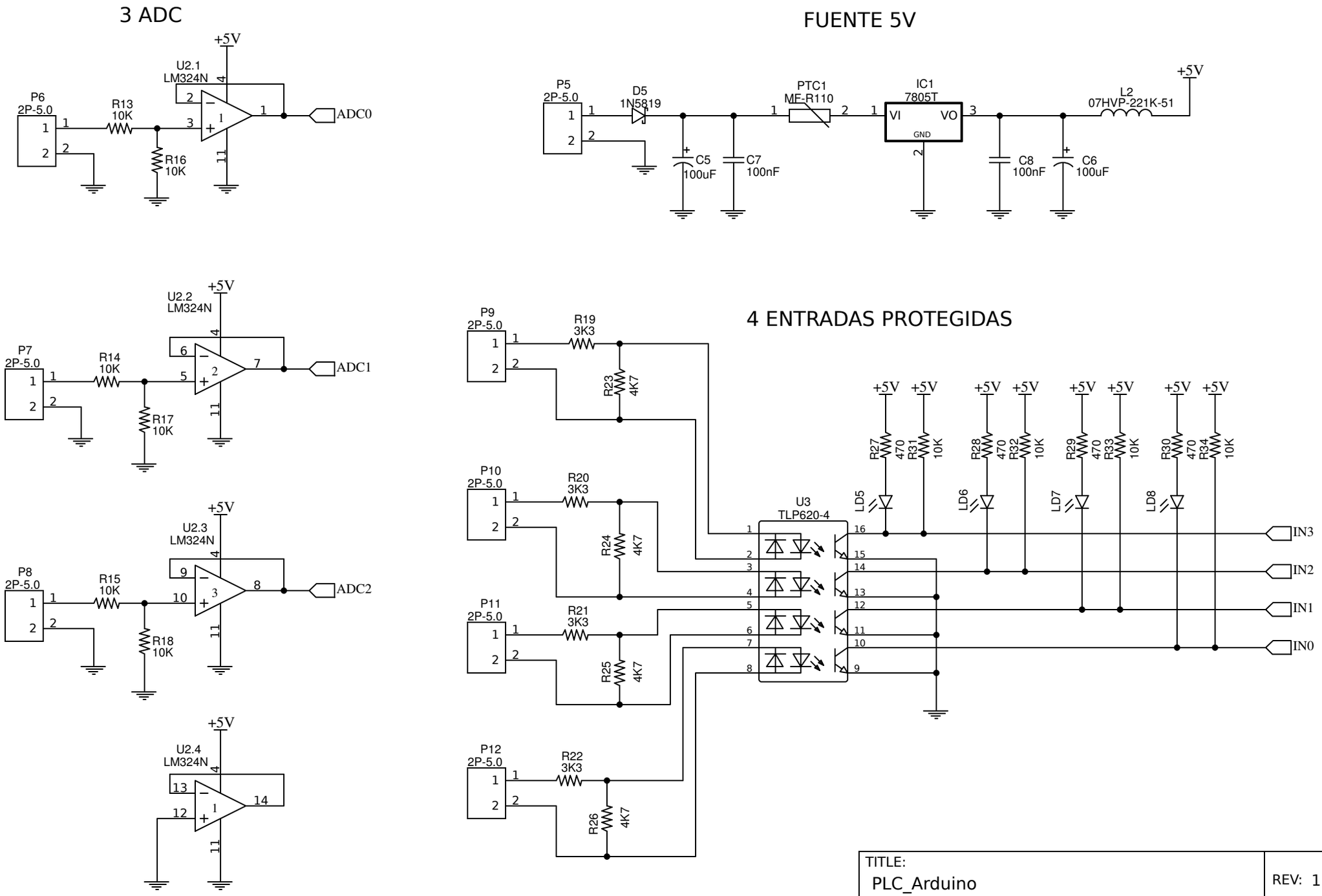

TITLE: PLC_Arduino	REV: 1.0
Date: 2018-04-22	Sheet: 2/2
EasyEDA V5.4.9	Drawn By: G.Gomendiourrutia