1) Only first layer

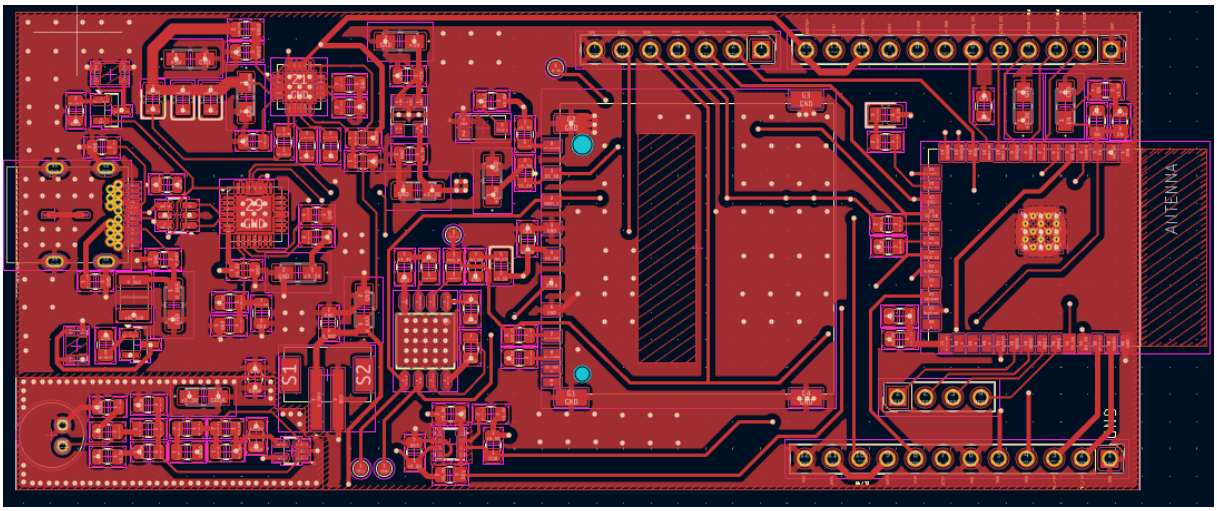

2)Only second layer

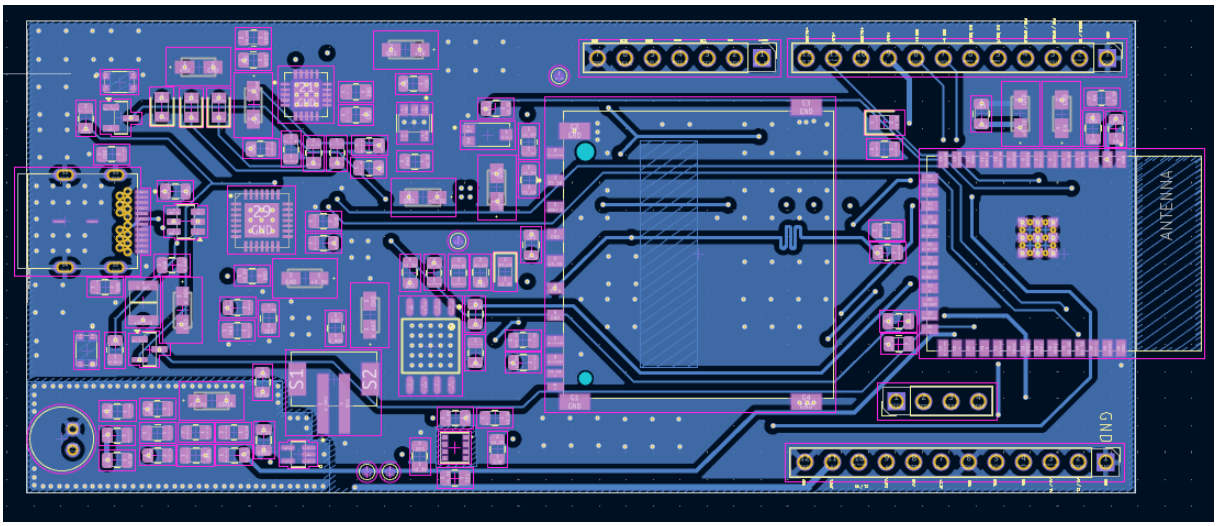

3)Only third layer:

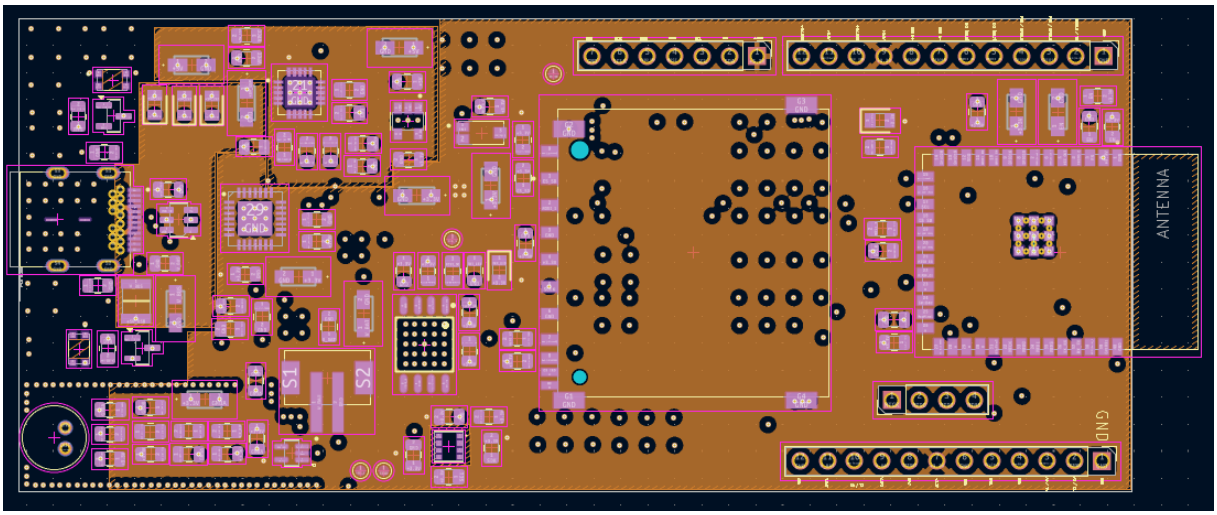

4)Only fourth layer

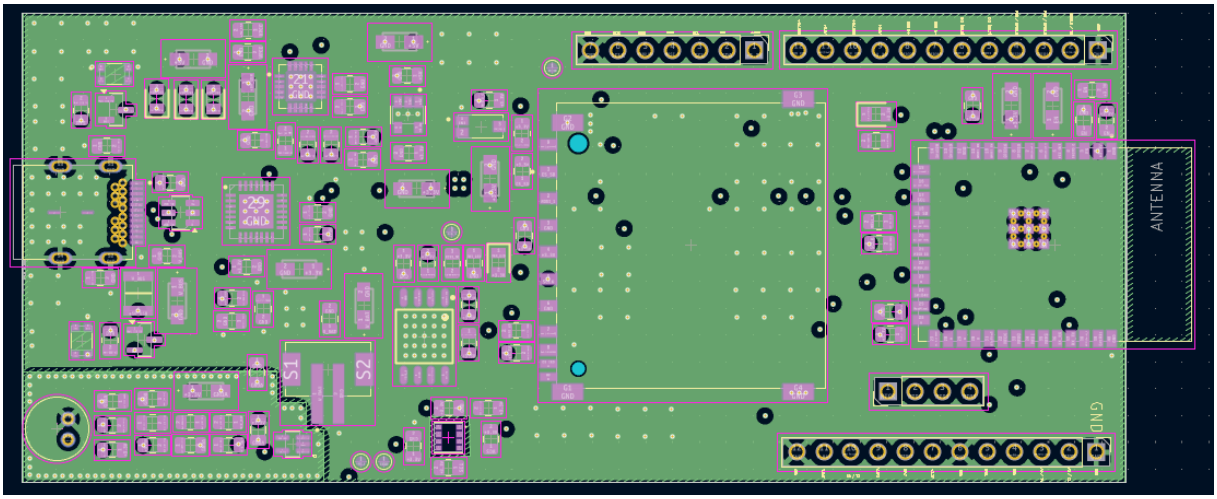

5)All layers is including

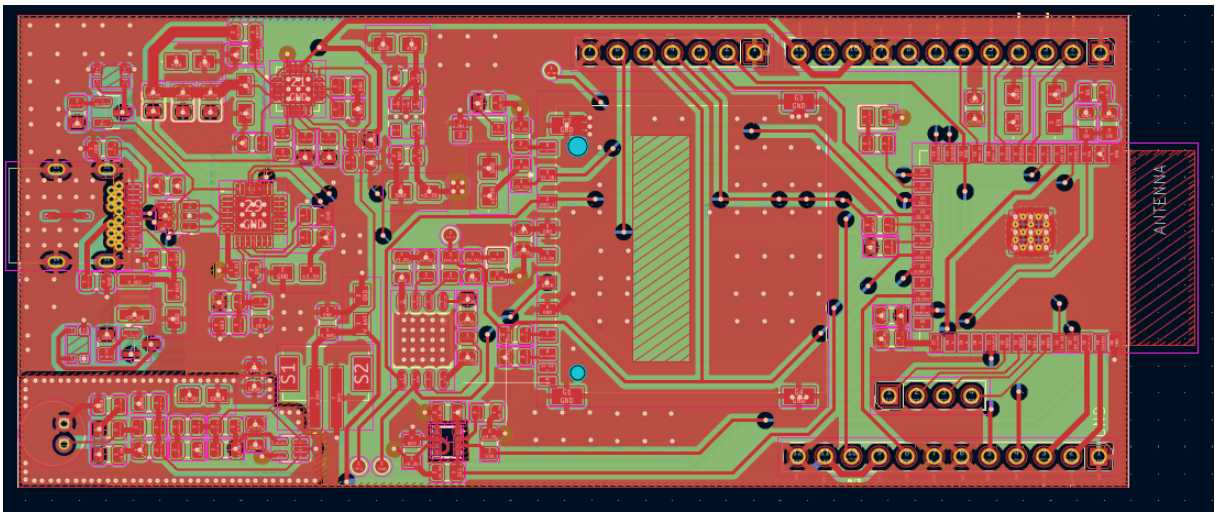

Görkem Güven

Muğla Sıtkı Koçman Uni.