Maxwell's Equations from Vortex Mechanics: A Kelvin–Voigt Analogy

Dmitry Losinets

March 2026

Abstract

We establish a formal mechanical analogy for Maxwell's equations using compact vortex structures in a Kelvin–Voigt viscoelastic medium. The shear modulus $G = \rho\Gamma^2/(4\pi r_0^2)$ is set by the collective Tkachenko mechanism (Biot–Savart back-reaction among vortex rings); Hill-vortex shape stability keeps each core compact at radius r_0. The Kelvin–Voigt constitutive law yields the damped shear-wave equation for the vector potential; incompressibility ($K/G \to \infty$) uniquely fixes the Coulomb gauge $\nabla \cdot \mathbf{A} = 0$. All four Maxwell equations follow with localised sources; in the far field ($\delta \to 0$) the viscous current vanishes and the exact vacuum equations are recovered. Electric charge is identified with the circulation invariant $Q = \rho_0 r_0 \Gamma$; the conversion constant $R = \tau_{\mathrm{KV}} = \eta_0/G$ is a directly measurable mechanical quantity. The model is valid for $\delta \equiv \nu/(cL) \ll 1$ and reproduces Coulomb's law in the static limit.

Contents

1 Introduction **4**
1.1 Motivation: reducing electrodynamics to mechanics 4
1.2 The central difficulty and our resolution 4
1.3 Previous work 5
1.4 Structure of the paper 5

2 Vortex Dynamics as a Kelvin–Voigt Medium **5**
2.1 Elastic restoring force of a compact vortex core 5
2.2 Kelvin–Voigt constitutive law for the exterior medium 7
2.3 Characteristic wave speed and connection to quantum fluids 8

3 Mathematical Framework **8**
3.1 Governing equations 8
3.2 Regime of validity 9
3.3 Core–exterior decomposition 9
3.4 Helmholtz decomposition 9

4 Field Mappings and Potentials **10**
4.1 Identification from the Lorentz force structure . . . 10
4.2 Potential definitions and the conversion constant R . . . 10
4.3 Wave equation for the vector potential (K–V derivation) . . . 11
4.4 Poisson equation for the scalar potential . . . 11
4.5 Coulomb gauge condition . . . 11
4.6 Value of R and its mechanical interpretation . . . 12

5 Charge as Mass-Normalised Circulation **12**
5.1 Vortex tube and the circulation invariant . . . 12
5.2 Definition of the hydrodynamic charge . . . 12
5.3 Quantisation of circulation . . . 13
5.4 Localised charge density . . . 13

6 Formal Correspondence with Maxwell's Equations **13**
6.1 (II) Gauss law for magnetism . . . 13
6.2 (III) Faraday's induction law . . . 13
6.3 (IV) Ampère–Maxwell law . . . 14
6.4 (I) Gauss law . . . 14

7 Physical Interpretation of Constants and Fields **15**
7.1 The conversion constant $R = \tau_{\mathrm{KV}}$ . . . 15
7.2 Dimensional consistency . . . 15
7.3 Energy flux: Poynting vector analogue . . . 15
7.4 Complete correspondence table . . . 15

8 Stationary Limit and Coulomb Law **16**
8.1 Electrostatic reduction . . . 16
8.2 Total charge and flux representation . . . 16
8.3 Point-source solution and $1/r$ field . . . 17
8.4 Force between two stationary vortex charges . . . 17

9 Limitations and Scope **17**

10 Possible Experimental Tests **17**

11 Conclusion **18**

A Kelvin–Voigt vs. Maxwell viscoelastic closures **19**

B Order-of-magnitude estimate of the effective current **20**

C Derivation of the Lorentz-like force structure **20**

D Incompressible K–V equations and Poisson equation for ϕ **20**

E Core–exterior decomposition via indicator function **21**

F Hill-vortex shape-mode shear modulus **22**

1 Introduction

1.1 Motivation: reducing electrodynamics to mechanics

The question of whether electromagnetic phenomena admit a mechanical interpretation has been central to theoretical physics since Faraday. Maxwell himself, in his 1861 paper "On Physical Lines of Force" [7], modelled the magnetic field as a system of rotating vortex cells in a mechanical medium, with idle wheels transmitting the electric force between them. Helmholtz [5] had just demonstrated that vortex filaments in an ideal fluid obey far-reaching conservation laws; the structural analogy between vortex tubes and magnetic field lines was a central intuition for both Maxwell and Kelvin [9].

Although the programme of mechanical ether models was eventually abandoned in favour of the abstract field-theoretic formulation as codified by Heaviside [8] and its successors, the search for hydrodynamic analogues of Maxwell's equations remains scientifically valuable for several reasons:

- **Heuristic and pedagogical value.** A concrete mechanical picture provides physical intuition complementary to the abstract formalism. Well-constructed mechanical analogies guide the search for solutions and generalisations that may not be visible from the field-theoretic perspective alone.

- **Superfluid and quantum-fluid analogies.** Quantised vortex dynamics in superfluid helium and Bose–Einstein condensates (BEC) provides a laboratory for field-theoretic phenomena at accessible energies [27]. The circulation quantisation $\Gamma = nh/m$ mirrors the discreteness of electric charge; the phonon spectrum has the linear (photon-like) dispersion $\omega = c_s k$ at long wavelengths. Formalising this correspondence suggests concrete experiments and motivates new theoretical connections.

- **Hypothesis generation.** A structural isomorphism between vortex mechanics and electrodynamics constrains models of the physical vacuum and suggests mechanisms that are difficult to access from standard field theory.

This paper is purely formal: we establish a mathematical isomorphism between the equations of a specific mechanical model and Maxwell's equations. No ontological claim is made that electromagnetism *is* mechanical.

1.2 The central difficulty and our resolution

The principal difficulty in constructing a hydrodynamic analogue of Maxwell's equations is the *magnetic sector*: Maxwell's equations admit electromagnetic waves propagating at finite speed c, whereas the vorticity equation in a Newtonian fluid,

$$\partial_t \boldsymbol{\omega} = \nu \nabla^2 \boldsymbol{\omega}, \tag{1}$$

is purely *diffusive*. Previous constructions have addressed this difficulty in various ways: some introduce a hyperbolic closure by hand without mechanical justification, while others restrict to irrotational or steady-state limits where the general incompatibility is not resolved [13, 16, 17].

Our resolution is to replace the Newtonian constitutive model with the **Kelvin–Voigt viscoelastic model**, motivated by a concrete mechanical property of vortex rings: a compact vortex core (Hill-type solution) maintains its shape via pressure balance. When deformed, it experiences a restoring force proportional to the displacement— an elastic response. This endows the exterior vortex-ring medium with a finite shear modulus G, turning the purely diffusive NS medium into a wave-supporting K–V solid. The damped shear-wave equation then follows as an *exact consequence* of the constitutive law, with no ad-hoc assumption.

1.3 Previous work

Formal fluid–EM analogies appear in [12, 13, 14, 16, 17, 10]. Moffatt [15] studied magnetostatic–Euler-flow analogies. Darrigol [11] and Bokulich [10] provide historical accounts of the Helmholtz–Maxwell analogy. The present work distinguishes itself by deriving the hyperbolic wave behaviour from the Kelvin–Voigt constitutive law, which is itself justified by the elastic stiffness of compact vortex cores.

1.4 Structure of the paper

Section 2 develops the physical basis (vortex core elasticity, K–V constitutive model). Section 3 sets up the mathematical framework (governing equations, regime of validity, decompositions). Section 4 establishes the field mappings, potentials, wave equations, and Coulomb gauge condition. Section 5 defines charge as a circulation invariant. Section 6 presents the full formal correspondence with Maxwell's equations. Section 7 interprets all constants and fields. Section 8 establishes the Coulomb law analogue. Section 9 discusses limitations, Sec. 10 proposes experimental tests, and Sec. 11 concludes.

2 Vortex Dynamics as a Kelvin–Voigt Medium

2.1 Elastic restoring force of a compact vortex core

Consider a compact translating vortex of the type found by Hill [1] (see also [2, 4, 3]): a spherical region of radius r_0 containing a vortex structure that propagates at constant speed without change of shape. Stability arises from a precise balance between the interior vorticity-induced pressure and the exterior irrotational pressure.

When this equilibrium is perturbed by a small displacement $\mathbf{d}$ with $|\mathbf{d}| \ll r_0$, the changed Biot–Savart interaction modifies the internal pressure distribution. The self-induced velocity scale is $U_{\text{ind}} \sim \Gamma/r_0$, and the pressure perturbation induced by a displacement $|\mathbf{d}|$ is $\delta p \sim \rho U_{\text{ind}}^2 |\mathbf{d}|/r_0$. The volumetric restoring force is therefore

$$f_{\text{elastic}} \sim \frac{\delta p}{r_0} \sim \frac{\rho\Gamma^2}{r_0^4} |\mathbf{d}| = G_{\text{vortex}} \frac{|\mathbf{d}|}{r_0^2}, \qquad G_{\text{vortex}} \sim \frac{\rho\Gamma^2}{r_0^2}. \tag{2}$$

This is the constitutive signature of a material with shear modulus G_{vortex}. The elastic response of the vortex is not an additional assumption: it is a consequence of the pressure-balance mechanism that sustains the vortex structure. The stability structure of vortex rings

and their perturbation theory is treated in [3, 4]; a precise derivation of $G(\Gamma, r_0, \rho)$ from vortex deformation modes remains an open problem (see Sec. 9). The order-of-magnitude estimate (2) is sufficient for establishing the analogy.

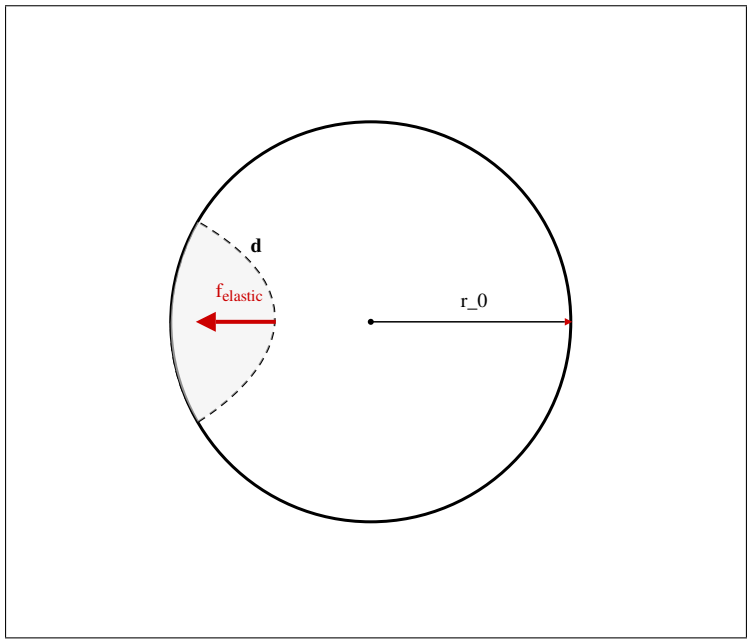

Figure 1: Compact Hill-type vortex core and its elastic restoring force. A small displacement $\mathbf{d}$ from the equilibrium shape produces a restoring force with effective shear modulus $G \sim \rho\Gamma^2/r_0^2$ (2), establishing the K–V elastic character of the medium.

Two contributions to G: shape stability and collective elasticity. The estimate (2) gives the correct scaling, but the physical origin of G in the exterior medium warrants sharper identification. A single free vortex ring in an unbounded ideal fluid undergoes steady translation without a restoring force for rigid-body displacement: Kelvin's circulation theorem preserves Γ but does not oppose the displacement. Two distinct mechanisms therefore contribute to G:

1. **Shape stability** (intra-vortex). The Hill vortex pressure balance stabilises the core *shape*: deformation modes ($\ell \geq 2$) are opposed by a restoring force, keeping the core compact at radius r_0. The exact prefactor is derived in Appendix F via a pressure-jump method (linearised Bernoulli, no PDE required):

$$G_{\text{shape}} = \frac{27\rho\Gamma^2}{175\, r_0^2}, \qquad \frac{G_{\text{shape}}}{G_{\text{Tk}}} = \frac{108\pi}{175} \approx 1.94. \tag{3}$$

   The two contributions are comparable; the shape term is approximately twice the Tkachenko term.

2. **Collective elasticity** (inter-vortex, Tkachenko mechanism). In the dilute assembly of vortex rings constituting the K–V exterior medium, displacing one ring changes

the Biot–Savart velocity field experienced by its neighbours; this back-reaction is the dominant source of G. For a regular 2-D lattice of vortices with superfluid density ρ_s, quantised circulation Γ, and areal vortex density n, Tkachenko [18] derived the exact shear modulus

$$G_{\mathrm{Tk}} = \frac{\rho_s \, \Gamma^2 \, n}{4\pi}. \tag{4}$$

For mean vortex spacing $\sim r_0$ (i.e. $n \sim r_0^{-2}$):

$$G_{\mathrm{Tk}} = \frac{\rho \, \Gamma^2}{4\pi r_0^2}, \tag{5}$$

confirming scaling (2) with the explicit prefactor $1/(4\pi)$. This result has been confirmed by subsequent analyses of vortex-lattice dynamics in rotating superfluids [19].

Both contributions are now explicitly determined; their sum is the total effective shear modulus:

$$G = G_{\mathrm{Tk}} + G_{\mathrm{shape}} = \frac{\rho\Gamma^2}{r_0^2}\left(\frac{1}{4\pi} + \frac{27}{175}\right) \approx \frac{0.234\,\rho\Gamma^2}{r_0^2}. \tag{6}$$

Throughout this paper $G \sim \rho\Gamma^2/r_0^2$ denotes this combined scaling.

2.2 Kelvin–Voigt constitutive law for the exterior medium

In the exterior region ($r \gg r_0$), the medium is modelled as a dilute assembly of vortex rings, each contributing elastic restoring forces together with viscous dissipation. The effective constitutive relation for the deviatoric stress is the **Kelvin–Voigt** (K–V) viscoelastic law [6]:

$$\boldsymbol{\tau} = 2G\,\mathbf{E}(\mathbf{d}) + 2\eta_0\,\mathbf{D}(\mathbf{u}), \tag{7}$$

where $\mathbf{d}$ is the displacement field, $\mathbf{u} = \partial_t \mathbf{d}$ the velocity, $\mathbf{E} = \frac{1}{2}(\nabla\mathbf{d} + (\nabla\mathbf{d})^{\mathsf{T}})$ the linearised strain, $\mathbf{D} = \frac{1}{2}(\nabla\mathbf{u} + (\nabla\mathbf{u})^{\mathsf{T}})$ the strain-rate tensor, $G > 0$ the effective elastic shear modulus, and $\eta_0 = \rho_0\nu$ the dynamic viscosity.

The two terms have distinct physical origins:

- The *elastic term* $2G\mathbf{E}$ encodes the restoring force from vortex-core pressure balance, with G of order $\rho\Gamma^2/r_0^2$ as estimated in (2).
- The *viscous term* $2\eta_0\mathbf{D}$ is the standard Newtonian contribution of the underlying fluid.

The pure Navier–Stokes (Newtonian) model is recovered by setting $G = 0$. The Kelvin–Voigt relaxation time is

$$\tau_{\mathrm{KV}} = \frac{\eta_0}{G}. \tag{8}$$

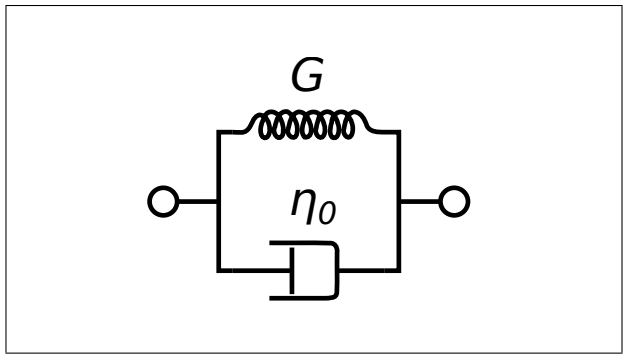

Figure 2: Kelvin–Voigt rheological model: spring (G, elasticity) in parallel with viscous dashpot (η_0). The relaxation time is $\tau_{\mathrm{KV}} = \eta_0/G = R$.

2.3 Characteristic wave speed and connection to quantum fluids

The shear-wave speed of the K–V medium is

$$c \equiv \sqrt{G/\rho_0}. \tag{9}$$

For a vortex network with quantum circulation $\Gamma = h/m$ and core spacing r_0, the estimate $G \sim \rho\Gamma^2/r_0^2$ gives $c \sim \Gamma/r_0$. This is consistent with the Bogoliubov phonon speed of a BEC [22, 24, 25], $c_s = \sqrt{gn_0/m}$ (where g is the coupling constant and n_0 the condensate density), confirming that the K–V model captures the correct long-wavelength wave physics of quantum fluids.

In the analogy, c plays the role of the speed of light: it sets the wave-transit time scale for exterior fields, and it is determined by the elastic properties of the vortex network rather than being a free parameter.

3 Mathematical Framework

3.1 Governing equations

In the compact core region, the medium is governed by the full Navier–Stokes equations. In the exterior region, we adopt the *incompressible* linearised K–V equations:

$$\nabla \cdot \mathbf{u} = 0, \tag{10}$$

$$\rho_0\, \partial_{tt}\mathbf{u} = -\nabla\partial_t p' + G\nabla^2\mathbf{u} + \eta_0\nabla^2\partial_t\mathbf{u}, \tag{11}$$

where $p' = p - p_0$ is the pressure perturbation acting as a Lagrange multiplier that enforces the constraint (10). These follow from the K–V constitutive law (7) by inserting into the linearised momentum balance $\rho_0\partial_t\mathbf{u} = \nabla \cdot \boldsymbol{\sigma}$ and differentiating with respect to t, then projecting onto the divergence-free subspace.

The incompressible limit is justified physically by taking the compressional (longitudinal) wave speed $c_P \to \infty$, so that acoustic compression adjusts instantaneously and the only remaining wave mode is the shear wave at $c = \sqrt{G/\rho_0}$. Within the K–V constitutive framework this is equivalent to $K/G \to \infty$ at fixed G (i.e. the bulk modulus $K \to \infty$ while

the shear modulus G remains finite), or equivalently Poisson's ratio $\nu_P \to \frac{1}{2}$. The shear speed c is therefore unambiguously defined without any constraint on the Lamé moduli, and a single-speed electromagnetic analogy follows without additional assumptions. Taking the divergence of (11) with (10) gives the Poisson equation

$$\nabla^2 p' = 0 \tag{12}$$

in the source-free exterior, so pressure is a harmonic function determined by boundary conditions at the core surface. The K–V elastic term $G\nabla^2\mathbf{d}$ acts only on the solenoidal displacement field and does not generate longitudinal modes.

3.2 Regime of validity

Let r_0 be the core radius and L the exterior observation scale. Define the dimensionless parameters

$$\mathrm{Re}_c = \frac{c\, r_0}{\nu}, \qquad \epsilon = \frac{r_0}{L}, \qquad \delta = \frac{\nu}{cL} = \frac{\tau_{\mathrm{KV}}}{L/c}. \tag{13}$$

The model is valid when

$$\mathrm{Re}_c \gg 1, \qquad \epsilon \ll 1, \qquad \delta \ll 1. \tag{14}$$

These conditions ensure respectively: (i) core-scale dynamics are elastic-dominated, with viscous effects small within the core ($\mathrm{Re}_c \gg 1$); (ii) the core is compact and exterior fields vary on scale $L \gg r_0$ ($\epsilon \ll 1$); (iii) the wave-dominated regime holds: viscous relaxation ($\tau_{\mathrm{KV}} = R$) is fast compared to the wave-transit time L/c, so Γ is conserved to $O(\delta)$ by Kelvin's theorem ($\delta \ll 1$).

3.3 Core–exterior decomposition

We introduce a smooth cutoff function $\chi(\mathbf{r}) \in [0, 1]$ with $\chi \approx 1$ in the core Ω_0 and $\chi \approx 0$ in the far exterior (see Appendix E). All source densities (σ, $\mathbf{j}$) contain factors of χ, $\nabla\chi$, or $\nabla^2\chi$, and vanish in the far field.

3.4 Helmholtz decomposition

The incompressibility constraint (10) means the exterior velocity field is *purely solenoidal*: $\nabla \cdot \mathbf{u} = 0$ everywhere in the exterior. In the Helmholtz decomposition

$$\mathbf{u} = \mathbf{u}_{\mathrm{ir}} + \mathbf{u}_{\mathrm{sol}}, \qquad \nabla \times \mathbf{u}_{\mathrm{ir}} = 0, \qquad \nabla \cdot \mathbf{u}_{\mathrm{sol}} = 0, \tag{15}$$

the irrotational part $\mathbf{u}_{\mathrm{ir}}$ is a potential flow satisfying $\nabla^2\phi_{\mathrm{ir}} = 0$ (no sources in the exterior); its role is captured by the scalar potential ϕ via the Poisson equation (Sec. 4.4). The solenoidal part $\mathbf{u}_{\mathrm{sol}}$ carries vorticity and maps to the vector potential $\mathbf{A} = R\mathbf{u}_{\mathrm{sol}}$, which is therefore exactly solenoidal: $\nabla \cdot \mathbf{A} = 0$ (Coulomb gauge).

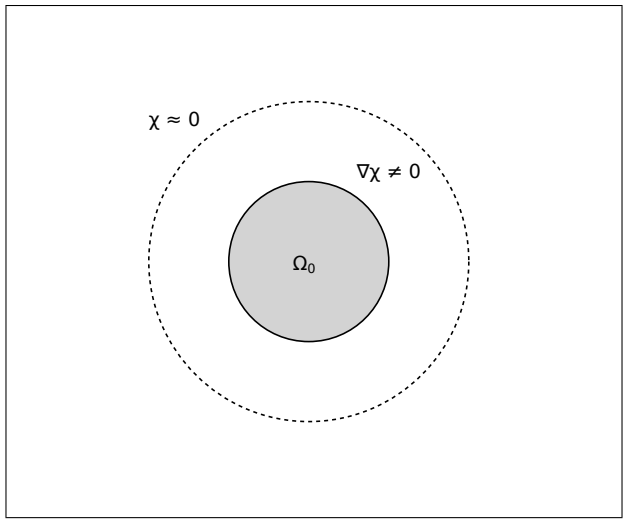

Figure 3: Core–exterior decomposition with smooth indicator function χ. Sources σ and $\mathbf{j}$ are confined to the core and its transition layer. The far field is governed by the source-free Maxwell equations.

4 Field Mappings and Potentials

4.1 Identification from the Lorentz force structure

Using the Lamb vector identity $(\mathbf{u}\cdot\nabla)\mathbf{u} = \frac{1}{2}\nabla u^2 - \mathbf{u}\times\boldsymbol{\omega}$ (with $\boldsymbol{\omega} = \nabla\times\mathbf{u}$), the exterior Euler equation $\rho_0(\partial_t\mathbf{u} + (\mathbf{u}\cdot\nabla)\mathbf{u}) = -\nabla p'$ becomes

$$\rho_0\,\partial_t\mathbf{u} + \nabla\big(p' + \tfrac{1}{2}\rho_0 u^2\big) = \rho_0\,\mathbf{u}\times\boldsymbol{\omega}. \tag{16}$$

The right-hand side is the *Lamb force density*. Comparing with the Lorentz force density $\mathbf{f} = \sigma(\mathbf{E} + \mathbf{u}\times\mathbf{B})$ suggests the identifications

$$\mathbf{B} \sim \boldsymbol{\omega} = \nabla\times\mathbf{u}, \qquad \mathbf{E} \sim -\partial_t\mathbf{u} - \nabla\left(\frac{p'}{\rho_0} + \frac{u^2}{2}\right). \tag{17}$$

In the linearised exterior ($|\mathbf{u}| \ll c$), the quadratic term $\nabla(u^2/2)$ is second order and absorbed into the scalar potential at leading order, giving $\mathbf{E} \approx -\partial_t\mathbf{u} - \nabla p'/\rho_0$. These match the standard potential form $\mathbf{E} = -\nabla\phi - \partial_t\mathbf{A}$ and $\mathbf{B} = \nabla\times\mathbf{A}$ with $\phi \sim p'/\rho_0$ and $\mathbf{A} \sim \mathbf{u}$. The full derivation using the Lamb identity is given in Appendix C.

4.2 Potential definitions and the conversion constant R

We introduce the electromagnetic potentials via a conversion factor R (dimension: time):

$$\phi \equiv R\,\frac{p}{\rho_0}, \qquad \mathbf{A} \equiv R\,\mathbf{u}. \tag{18}$$

The electric and magnetic fields are then

$$\mathbf{E} \equiv -\nabla\phi - \partial_t\mathbf{A} = -R\Big(\nabla\frac{p}{\rho_0} + \partial_t\mathbf{u}\Big), \qquad \mathbf{B} \equiv \nabla\times\mathbf{A} = R\,\nabla\times\mathbf{u}. \tag{19}$$

Note that $\mathbf{B} = R\,\nabla \times \mathbf{u} = R\boldsymbol{\omega}$ depends only on the *solenoidal* part $\mathbf{u}_{\rm sol}$, since $\nabla \times \mathbf{u}_{\rm ir} = 0$ by definition. The irrotational component of $\mathbf{u}$ enters ϕ and is linked to $\mathbf{A}$ through the Coulomb gauge condition (26). The specific value of R is fixed in Sec. 4.6 below.

4.3 Wave equation for the vector potential (K–V derivation)

For the solenoidal displacement $\mathbf{d}_{\rm sol}$ with $\nabla \cdot \mathbf{d}_{\rm sol} = 0$, the irrotational pressure gradient projects to zero in the solenoidal sector, so the K–V constitutive law (7) inserted into the linearised momentum balance gives

$$\rho_0\,\partial_{tt}\mathbf{d}_{\rm sol} = G\,\nabla^2\mathbf{d}_{\rm sol} + \eta_0\,\nabla^2\partial_t\mathbf{d}_{\rm sol}. \tag{20}$$

Differentiating with respect to t and substituting $\mathbf{u}_{\rm sol} = \partial_t\mathbf{d}_{\rm sol}$:

$$\rho_0\,\partial_{tt}\mathbf{u}_{\rm sol} = G\,\nabla^2\mathbf{u}_{\rm sol} + \eta_0\,\nabla^2\partial_t\mathbf{u}_{\rm sol}. \tag{21}$$

Dividing by ρ_0 with $c = \sqrt{G/\rho_0}$ and $\nu = \eta_0/\rho_0$:

$$\partial_{tt}\mathbf{u}_{\rm sol} - c^2\nabla^2\mathbf{u}_{\rm sol} = \nu\nabla^2\partial_t\mathbf{u}_{\rm sol}. \tag{22}$$

Since $\mathbf{u}$ is purely solenoidal in the incompressible exterior, the vector potential $\mathbf{A} = R\mathbf{u}$ is entirely solenoidal and satisfies the same wave equation exactly:

$$\partial_{tt}\mathbf{A} - c^2\nabla^2\mathbf{A} = \nu\nabla^2\partial_t\mathbf{A}. \tag{23}$$

This is an *exact consequence* of the K–V constitutive model (7) for the solenoidal velocity field—not an independent hypothesis. No decomposition into transverse and longitudinal parts is necessary: the Coulomb gauge $\nabla \cdot \mathbf{A} = 0$ holds identically.

4.4 Poisson equation for the scalar potential

Since $\nabla^2 p' = 0$ in the source-free exterior (12), the scalar potential $\phi \equiv R\,p'/\rho_0$ satisfies

$$\nabla^2\phi = 0 \tag{24}$$

there. Near the core (where the χ-split introduces source terms), this becomes the Poisson equation

$$-\rho_0\nabla^2\phi = \sigma, \tag{25}$$

which is derived from Gauss's law in Sec. 6 and Appendix D. The scalar potential propagates instantaneously (elliptic equation) rather than as a wave; this is characteristic of Coulomb gauge and is gauge-equivalent to the Lorenz-gauge wave equation—all physical observables are identical.

4.5 Coulomb gauge condition

The definition $\mathbf{A} = R\mathbf{u}$ together with the incompressibility constraint (10) immediately gives

$$\nabla \cdot \mathbf{A} = R\,\nabla \cdot \mathbf{u} = 0. \tag{26}$$

This is the **Coulomb gauge condition**, here derived as an *exact consequence of incompressibility*—not imposed by hand. The scalar potential is then determined by the instantaneous Poisson equation (25), as in standard Coulomb-gauge electrostatics.

Gauge equivalence. The Coulomb gauge and the Lorenz gauge $\nabla \cdot \mathbf{A} + (1/c^2)\partial_t \phi = 0$ are physically equivalent: they are related by a gauge transformation and all observable fields $\mathbf{E}$, $\mathbf{B}$ are identical. The incompressible K–V medium naturally selects Coulomb gauge; the Lorenz condition would instead emerge from a compressible barotropic closure (see Appendix D for comparison).

4.6 Value of R and its mechanical interpretation

Dimensional consistency requires $[\phi] = [\mathbf{E}] \cdot \mathrm{m}$ and $[\mathbf{A}] = [\mathbf{B}] \cdot \mathrm{m}$, which with (18) gives $[R] = \mathrm{s}$. The unique choice that makes the wave equation for $\mathbf{A}$ (23) hold with the same c and ν as (22) is

$$\boxed{R \equiv \frac{\nu}{c^2} = \frac{\eta_0/\rho_0}{G/\rho_0} = \frac{\eta_0}{G} = \tau_{\mathrm{KV}}.} \tag{27}$$

The conversion constant R is the **Kelvin–Voigt mechanical relaxation time** of the exterior medium. It is not a free parameter: it is determined by the ratio of the fluid viscosity to the vortex-network elastic modulus. The regime $\delta = \nu/(cL) = R/(L/c) \ll 1$ is then simply the requirement that the medium relaxes faster than the wave traverses the observation scale.

5 Charge as Mass-Normalised Circulation

5.1 Vortex tube and the circulation invariant

Let Ω_0 be a compact toroidal vortex core with axis $\mathbf{e}$ and core radius r_0. The vorticity $\boldsymbol{\omega} = \nabla \times \mathbf{u}$ forms a vortex tube $\mathcal{T}$ linked with Ω_0. The standard circulation over any admissible loop C encircling $\mathcal{T}$ once is

$$\Gamma \equiv \oint_C \mathbf{u} \cdot d\mathbf{l} = \iint_{S:\,\partial S = C} \boldsymbol{\omega} \cdot d\mathbf{S}. \tag{28}$$

By Kelvin's circulation theorem, Γ is invariant in the inviscid limit, with $O(\nu)$ corrections in the weakly viscous regime.

5.2 Definition of the hydrodynamic charge

The hydrodynamic charge is defined as

$$\boxed{Q \equiv \rho_0\, r_0\, \Gamma,} \tag{29}$$

where $\ell = r_0$ is the vortex core radius—the intrinsic length scale of the compact core. The sign of Q is fixed by the right-hand rule orientation of C relative to $\mathbf{e}$.

The choice $\ell = r_0$ is natural: it makes Q proportional to the vortex "volume" $\sim r_0^3$ weighted by the vorticity flux $\sim \Gamma/r_0^2$, giving the source strength a clear physical dimension and scale. In the electrostatic Coulomb law (Sec. 8) only the ratio $Q/(4\pi\rho_0) = r_0\Gamma/(4\pi)$ enters, so the Coulomb field is independent of the normalisation convention for Q when ℓ is fixed.

5.3 Quantisation of circulation

In superfluid systems the circulation is quantised [20, 21, 23]:

$$\Gamma = n\,\frac{h}{m_{\mathrm{p}}}, \quad n \in \mathbb{Z}, \tag{30}$$

where m_{p} is the particle mass and h Planck's constant. This provides the natural discreteness of Q, mirroring the quantisation of electric charge. In this context the condition $\ell = r_0$ connects the charge quantum to the healing length of the condensate [24, 25].

5.4 Localised charge density

To represent Q as a volume integral, introduce the surface delta distribution δ_S on a spanning surface S of $\mathcal{T}$ (with $\partial S = C$):

$$\sigma(\mathbf{r}) \equiv \rho_0\, r_0 \left(\boldsymbol{\omega}(\mathbf{r}) \cdot \mathbf{n}(\mathbf{r})\right) \delta_S(\mathbf{r}). \tag{31}$$

Integrating over all space and applying Stokes' theorem gives

$$\int_{\mathbb{R}^3} \sigma\, dV = \rho_0\, r_0 \int_S \boldsymbol{\omega} \cdot \mathbf{n}\, dS = \rho_0\, r_0\, \Gamma = Q, \tag{32}$$

using definition (28). The localised density $\sigma(\mathbf{r})$ and the global invariant Q are therefore consistent: σ is the source density whose volume integral recovers the circulation invariant. Localisation to the core follows from the χ-split: in the exterior, $\boldsymbol{\omega} \to 0$ and $\sigma \to 0$.

6 Formal Correspondence with Maxwell's Equations

In the exterior region we use the potentials (18) and the field definitions (19). Sources are localised by the χ-split (Sec. 3.3). The four equations are established in the order (II), (III), (IV), (I): the first two follow as pure potential identities; (IV) uses the K–V wave closure (23); and (I) follows from the Coulomb gauge condition (26) and the Poisson equation (25) for the scalar potential.

6.1 (II) Gauss law for magnetism

$$\nabla \cdot \mathbf{B} = \nabla \cdot (\nabla \times \mathbf{A}) = 0. \tag{II}$$

This is a vector identity and holds everywhere.

6.2 (III) Faraday's induction law

$$\nabla \times \mathbf{E} = -\nabla \times \nabla\phi - \partial_t(\nabla \times \mathbf{A}) = -\partial_t \mathbf{B}. \tag{III}$$

This is also an identity of the potential formalism.

6.3 (IV) Ampère–Maxwell law

In Coulomb gauge (26), the vector identity $\nabla \times (\nabla \times \mathbf{A}) = \nabla(\nabla \cdot \mathbf{A}) - \nabla^2 \mathbf{A}$ simplifies to

$$c^2 \nabla \times \mathbf{B} = -c^2 \nabla^2 \mathbf{A}. \tag{33}$$

Dividing the K–V momentum equation (11) by ρ_0 and multiplying by R (so that $\mathbf{A} = R\mathbf{u}$, $\phi = Rp'/\rho_0$):

$$\partial_{tt}\mathbf{A} + \nabla \partial_t \phi = c^2 \nabla^2 \mathbf{A} + \nu \nabla^2 \partial_t \mathbf{A}, \tag{34}$$

hence

$$-c^2 \nabla^2 \mathbf{A} = -\partial_{tt}\mathbf{A} - \nabla \partial_t \phi + \nu \nabla^2 \partial_t \mathbf{A}. \tag{35}$$

Using $\partial_t \mathbf{E} = -\nabla \partial_t \phi - \partial_{tt}\mathbf{A}$ (time-derivative of $\mathbf{E} = -\nabla\phi - \partial_t \mathbf{A}$), the $\nabla \partial_t \phi$ and $-\partial_{tt}\mathbf{A}$ terms combine to $\partial_t \mathbf{E}$:

$$c^2 \nabla \times \mathbf{B} = \partial_t \mathbf{E} + \nu \nabla^2 \partial_t \mathbf{A}. \tag{36}$$

Multiplying by ρ_0 and identifying $\mathbf{H} \equiv \rho_0 c^2 \mathbf{B}$, $\mathbf{D} \equiv \rho_0 \mathbf{E}$, and $\mathbf{j} \equiv \rho_0 \nu \, \nabla^2 \partial_t \mathbf{A}$:

$$\nabla \times \mathbf{H} = \partial_t \mathbf{D} + \mathbf{j}, \qquad \boxed{\mathbf{H} \equiv \rho_0 c^2 \mathbf{B}, \quad \mathbf{D} \equiv \rho_0 \mathbf{E}, \quad \mathbf{j} \equiv \rho_0 \nu \, \nabla^2 \partial_t \mathbf{A}.} \tag{IV}$$

The identifications $\varepsilon\varepsilon_0 = \rho_0$ and $\mu\mu_0 = (\rho_0 c^2)^{-1}$ (Sec. 7) give $\mathbf{D} = \varepsilon\varepsilon_0 \mathbf{E}$ and $\mathbf{H} = \mathbf{B}/(\mu\mu_0)$, consistent with the standard Ampère–Maxwell form $\nabla \times \mathbf{H} = \partial_t \mathbf{D} + \mathbf{j}$. The effective current $\mathbf{j} = \rho_0 \nu \nabla^2 \partial_t \mathbf{A}$ has a direct mechanical origin: it represents the viscous relaxation of elastic energy in the solenoidal sector of the K–V medium. It is proportional to ν (equivalently $R = \nu/c^2$) and vanishes in the ideal limit $\nu \to 0$, consistent with the conservative (source-free) Maxwell structure for an inviscid medium. In the exterior where $\chi \approx 0$, the current is $O(\delta) \to 0$ (Appendix B), so the electromagnetic sources are localised near the core as required. In exact analogy with the boundary-layer decomposition of classical vortex theory [4], viscosity governs only the core region; in the far field ($\delta \to 0$) the viscous current vanishes and the source-free vacuum form $\nabla \times \mathbf{H} = \partial_t \mathbf{D}$ is recovered exactly.

6.4 (I) Gauss law

Take the divergence of $\mathbf{D} = \rho_0 \mathbf{E} = -\rho_0 \nabla\phi - \rho_0 \partial_t \mathbf{A}$ and apply the Coulomb gauge (26):

$$\nabla \cdot \mathbf{D} = -\rho_0 \nabla^2 \phi - \rho_0 \, \partial_t (\nabla \cdot \mathbf{A}) = -\rho_0 \nabla^2 \phi. \tag{37}$$

The Poisson equation (25) then gives directly:

$$\boxed{\nabla \cdot \mathbf{D} = -\rho_0 \nabla^2 \phi = \sigma.} \tag{I}$$

Localisation: in the source-free exterior $\nabla^2 \phi = 0$, so $\sigma \to 0$ away from the core; σ is supported near the core boundary where $\nabla\chi \neq 0$ via the χ-split.

7 Physical Interpretation of Constants and Fields

7.1 The conversion constant $R = \tau_{\mathrm{KV}}$

The constant $R = \nu/c^2 = \eta_0/G = \tau_{\mathrm{KV}}$ is the Kelvin–Voigt mechanical relaxation time of the exterior vortex-ring medium. Its physical meaning:

- τ_{KV} is the time for viscous stress to dissipate an elastic deformation of the medium.
- The regime $\delta = R/(L/c) \ll 1$ means the medium relaxes many times before the wave crosses the observation scale: the medium is *wave-dominated* and the electromagnetic analogy is accurate.
- R is not a fitting parameter. For a known fluid viscosity ν and measured wave speed c, it follows as $R = \nu/c^2$; or equivalently from the elastic modulus $G = \rho_0 c^2$ and viscosity $\eta_0 = \rho_0 \nu$.

7.2 Dimensional consistency

With $R = \nu/c^2$ ($[R] = \mathrm{s}$), the fields carry the following dimensions:

$$[\phi] = \mathrm{m}^2\,\mathrm{s}^{-1}, \quad [\mathbf{A}] = \mathrm{m}, \quad [\mathbf{E}] = \mathrm{m}\,\mathrm{s}^{-1}, \quad [\mathbf{B}] = 1 \text{ (dimensionless)}, \quad [\mathbf{H}] = \mathrm{kg}\,\mathrm{m}^{-1}\,\mathrm{s}^{-2}. \tag{38}$$

Consequently $[c\mathbf{B}] = \mathrm{m}\,\mathrm{s}^{-1} = [\mathbf{E}]$, as in SI electrodynamics. The effective permittivity and permeability are

$$\varepsilon\varepsilon_0 = \rho_0, \qquad \mu\mu_0 = \frac{1}{\rho_0 c^2}, \tag{39}$$

and the electromagnetic energy density $w_{\mathrm{EM}} = \frac{1}{2}\rho_0|\mathbf{E}|^2 + \frac{1}{2}\rho_0 c^2|\mathbf{B}|^2$ has dimensions $\mathrm{J}\,\mathrm{m}^{-3}$, consistent with the kinetic energy density $\frac{1}{2}\rho u^2$ of the underlying fluid.

7.3 Energy flux: Poynting vector analogue

The electromagnetic Poynting vector $\mathbf{S} = \mathbf{E} \times \mathbf{B}/(\mu\mu_0)$ has the hydrodynamic analogue

$$\mathbf{S}_{\mathrm{hydro}} = \frac{\mathbf{E} \times \mathbf{B}}{\mu\mu_0} = \rho_0 c^2\, \mathbf{E} \times \mathbf{B} = -\rho_0 c^2 R^2 \big[\big(\nabla \tfrac{p}{\rho_0} + \partial_t \mathbf{u}\big) \times (\nabla \times \mathbf{u})\big]. \tag{40}$$

Physically, $\mathbf{S}_{\mathrm{hydro}}$ is the rate at which mechanical energy is transported per unit area through the exterior medium by coupled pressure and vorticity perturbations. The conservation identity $\partial_t w_{\mathrm{EM}} + \nabla \cdot \mathbf{S}_{\mathrm{hydro}} = 0$ holds in the inviscid exterior ($\nu \to 0$, i.e. $\delta \to 0$), confirming the conservative character of the far-field.

7.4 Complete correspondence table

Table 1: Electromagnetic–hydrodynamic correspondence. All hydrodynamic expressions use $R = \nu/c^2 = \tau_{\mathrm{KV}}$ and $c = \sqrt{G/\rho_0}$.

EM quantity	**Hydrodynamic analogue**	**SI unit**	**Model unit**
Scalar potential ϕ	$R\,p/\rho_0$	V	$\mathrm{m^2\,s^{-1}}$
Vector potential $\mathbf{A}$	$R\,\mathbf{u}$	$\mathrm{V{\cdot}s{\cdot}m^{-1}}$	m
Electric field $\mathbf{E}$	$-R(\nabla p/\rho_0 + \partial_t \mathbf{u})$	$\mathrm{V{\cdot}m^{-1}}$	$\mathrm{m\,s^{-1}}$
Magnetic induction $\mathbf{B}$	$R\,\nabla \times \mathbf{u}$	T	1
Magnetic intensity $\mathbf{H}$	$\rho_0 c^2 \mathbf{B} = \rho_0 \nu\, \nabla \times \mathbf{u}$	$\mathrm{A{\cdot}m^{-1}}$	$\mathrm{kg\,m^{-1}\,s^{-2}}$
Permittivity $\varepsilon\varepsilon_0$	ρ_0	$\mathrm{F{\cdot}m^{-1}}$	$\mathrm{kg\,m^{-3}}$
Permeability $\mu\mu_0$	$(\rho_0 c^2)^{-1}$	$\mathrm{H{\cdot}m^{-1}}$	$\mathrm{m\,s^2\,kg^{-1}}$
Current density $\mathbf{j}$	$\rho_0 \nu\, \nabla^2 \partial_t \mathbf{A}$	$\mathrm{A{\cdot}m^{-2}}$	$\mathrm{kg\,m^{-2}\,s^{-2}}$
Charge density σ	$-\rho_0 \nabla^2 \phi$	$\mathrm{C{\cdot}m^{-3}}$	$\mathrm{kg\,m^{-3}\,s^{-1}}$
EM energy density w	$\frac{1}{2}\rho_0 \lvert\mathbf{E}\rvert^2 + \frac{1}{2}\rho_0 c^2 \lvert\mathbf{B}\rvert^2$	$\mathrm{J{\cdot}m^{-3}}$	$\mathrm{J\,m^{-3}}$
Charge Q	$\rho_0\, r_0\, \Gamma$	C	$\mathrm{kg\,s^{-1}}$
Current I	dQ/dt	A	$\mathrm{kg\,s^{-2}}$
Shear modulus	G	—	$\mathrm{kg\,m^{-1}\,s^{-2}}$
Relaxation time R	$\tau_{\mathrm{KV}} = \eta_0/G$	s	s
Wave speed c	$\sqrt{G/\rho_0}$	$\mathrm{m\,s^{-1}}$	$\mathrm{m\,s^{-1}}$

8 Stationary Limit and Coulomb Law

8.1 Electrostatic reduction

In the strictly stationary regime ($\partial_t = 0$, $\mathbf{u}_\infty = 0$, $\mathbf{j} = 0$):

$$\mathbf{E} = -\nabla\phi, \qquad \mathbf{B} = \nabla \times \mathbf{A}. \tag{41}$$

Gauss law (I) reduces to Poisson's equation:

$$-\rho_0 \nabla^2 \phi = \sigma. \tag{42}$$

8.2 Total charge and flux representation

Integrating (42) over a volume V enclosing the source and applying the divergence theorem:

$$Q = \int_V \sigma\, dV = \oint_{\partial V} \rho_0 \mathbf{E} \cdot d\mathbf{S} = \rho_0 \oint_{\partial V} \mathbf{E} \cdot d\mathbf{S}. \tag{43}$$

The total charge equals the flux of $\rho_0 \mathbf{E}$ through a closed surface, exactly as in electrostatics with $Q = \rho_0\, r_0\, \Gamma$.

8.3 Point-source solution and $1/r$ field

For $r \gg r_0$, the compact source is equivalent to a point charge $\sigma = Q\,\delta^{(3)}(\mathbf{r})$, and (42) gives

$$\phi(r) = \frac{Q}{4\pi\rho_0}\,\frac{1}{r}, \qquad \mathbf{E}(r) = \frac{Q}{4\pi\rho_0}\,\frac{\hat{\mathbf{r}}}{r^2}. \tag{44}$$

8.4 Force between two stationary vortex charges

The force on a second core of charge Q_2 at distance r_{12} from Q_1 is

$$\boxed{\mathbf{F}_{12} = \frac{Q_1 Q_2}{4\pi\rho_0}\,\frac{\hat{\mathbf{r}}_{12}}{r_{12}^2}, \qquad k_{\text{hydro}} = \frac{1}{4\pi\rho_0}.} \tag{45}$$

The interaction is repulsive for equal-sign circulations and attractive for opposite circulations, directly mirroring the electromagnetic Coulomb law.

9 Limitations and Scope

The model is valid under the regime conditions (14). It demonstrates a controlled hydrodynamic analogy, not a proof that electromagnetism is mechanical. Key limitations:

- **Elastic modulus: pressure-jump approximation.** The shape-mode result $G_{\text{shape}} = 27\rho\Gamma^2/(175r_0^2)$ (Appendix F, eq. (3)) uses the background Bernoulli fields only (frozen-flow approximation), ignoring the kinetic energy of the perturbed stream function $\psi^{(1)}$. The full first-principles calculation would add a positive correction, so (3) is a lower bound on G_{shape}.
- **Linearity.** The exterior equations are linearised. Nonlinear effects (vortex reconnection, turbulence) may destabilise the circulation invariant Q.
- **Charge discretisation.** The quantisation of Q requires either quantised circulation (superfluid regime) or a separate microphysical mechanism.
- **Relativistic regime.** The analogy does not address Lorentz covariance or relativistic corrections.

10 Possible Experimental Tests

The model predicts testable phenomena in quantum fluids and classical vortex systems:

1. **Coulomb-type vortex interaction.** Measure the force between two compact cores as a function of r_{12} and circulations Γ_1, Γ_2. The model predicts $F \propto \Gamma_1\Gamma_2/r_{12}^2$ with sign reversal under circulation inversion.
2. **Hyperbolic vs. diffusive transport.** Impulsively excite a compact core and measure the arrival time of the perturbation at distance L. Navier–Stokes diffusion gives $t \sim L^2/\nu$; the K–V model predicts a finite-speed front at $t \sim L/c$.

3. **Viscosity scaling of the effective current.** In an oscillatory vortex configuration, vary ν at fixed c and measure the far-field amplitude. The model predicts $|\mathbf{j}| \propto \delta = \nu/(cL)$.

4. **Far-field energy decay.** Reconstruct $\mathbf{E}$ and $\mathbf{B}$ from measured p and $\mathbf{u}$. For a stationary compact source, verify $|\mathbf{E}| \propto r^{-2}$ and $w \propto r^{-4}$.

5. **Tests in quantum fluids.** BEC and superfluid ^{4}He offer well-defined vortex cores with quantised Γ [23, 24], making them ideal systems for testing the charge-circulation correspondence and for measuring the K–V wave speed $c = \sqrt{G/\rho} \approx c_{\text{Bogoliubov}}$ [26]. Recent direct imaging of quantised vortex cores [28, 27] provides the experimental infrastructure needed for such measurements.

11 Conclusion

We have shown that Maxwell's equations of electrodynamics follow formally from the mechanics of compact vortex structures in a Kelvin–Voigt viscoelastic medium, under the assumptions of weak viscosity, small exterior perturbations, and wave-dominated propagation ($\delta \ll 1$).

The conceptual chain is:

1. A compact vortex core maintains its shape via pressure balance, generating an elastic restoring force with shear modulus $G \sim \rho\Gamma^2/r_0^2$.

2. The exterior medium of dilute vortex rings behaves as a K–V solid with wave speed $c = \sqrt{G/\rho}$ and relaxation time $R = \tau_{\text{KV}} = \eta_0/G$.

3. The K–V constitutive law gives, exactly, the damped shear-wave equation for the vector potential (23).

4. Incompressibility gives the Coulomb gauge condition (26) without additional assumptions.

5. Maxwell's four equations follow: (II) and (III) are potential identities; (IV) uses the K–V wave closure; (I) uses the Coulomb gauge and the Poisson equation for the scalar potential.

6. Electric charge is the circulation invariant $Q = \rho_0 r_0 \Gamma$, conserved by Kelvin's theorem. The Coulomb law follows in the stationary limit.

All mapped quantities have concrete mechanical interpretations. In particular, $R = \tau_{\text{KV}}$ is a directly measurable property of the medium, not a fitting parameter.

Value in current form. The framework provides: (i) a mechanically self-consistent formal analogy useful for heuristics, pedagogy, and intuition-building; (ii) concrete experimental predictions for vortex interactions in superfluid systems (BEC, liquid helium); (iii) a bridge between vortex dynamics and electromagnetic field theory that may guide new hypotheses about wave-supporting media.

Future extensions. Priorities for future work: an exact (beyond pressure-jump) computation of the Hill-vortex shape-mode prefactor in G (Appendix F provides a lower bound $G_{\text{shape}} \geq 27\rho\Gamma^2/(175r_0^2)$); extension to time-dependent moving-core configurations; possible Lorentz-covariant generalisation; and experimental tests in BEC and superfluid helium.

Appendices

This appendix collects auxiliary derivations and comparisons referenced in the main text.

A Kelvin–Voigt vs. Maxwell viscoelastic closures

Section 4.3 derives the damped shear-wave equation (22) from the K–V constitutive law (7). Here we compare this with the Maxwell viscoelastic model and discuss limits.

Why not the Maxwell model? The Maxwell constitutive relation,

$$\boldsymbol{\tau} + \tau_M \, \partial_t \boldsymbol{\tau} = \eta_0 \, \mathbf{D}(\mathbf{u}), \tag{46}$$

with $\tau_M = \eta_0/G$, leads to the *telegrapher's equation* for the solenoidal velocity:

$$\partial_{tt}\mathbf{u}_{\text{sol}} + \frac{1}{\tau_M}\,\partial_t \mathbf{u}_{\text{sol}} = \frac{\nu}{\tau_M}\,\nabla^2 \mathbf{u}_{\text{sol}}. \tag{47}$$

This has *global* (homogeneous) damping $\tau_M^{-1}\partial_t \mathbf{u}$, whereas the K–V equation (22) has *spatial* (Laplacian) damping $\nu\nabla^2\partial_t\mathbf{u}$. The solenoidal constraint $\nabla \cdot \mathbf{u}_{\text{sol}} = 0$ is preserved by both models (as the divergence of each equation vanishes when $\nabla \cdot \mathbf{u} = 0$). Furthermore, (47) does not factor into a wave operator plus a small viscous perturbation when $\delta \ll 1$, so it does not admit a clean potential-theory interpretation.

Limits of the K–V closure.

- *Pure elastic* ($\eta_0 \to 0$): (22) reduces to $\partial_{tt}\mathbf{u}_{\text{sol}} = c^2\nabla^2\mathbf{u}_{\text{sol}}$, consistent with Hill's kinematics and the Bogoliubov phonon branch.
- *Pure viscous* ($G \to 0$, $c \to 0$): (20) degenerates and the velocity equation reduces to vorticity diffusion $\partial_t\boldsymbol{\omega} = \nu\nabla^2\boldsymbol{\omega}$, recovering standard NS.
- *Wave-dominated regime* ($\delta \ll 1$, i.e. $\tau_{\text{KV}} \ll L/c$): wave propagation dominates and the EM analogy holds to $O(\delta)$.

Generalised linear viscoelastic model. The Jeffreys model $(1+\lambda_1\partial_t)\boldsymbol{\tau} = \eta_0(1+\lambda_2\partial_t)\mathbf{D}$ interpolates between Maxwell ($\lambda_2 = 0$) and K–V ($\lambda_1 = 0$). In the limit $\lambda_1 \ll \tau_{\text{KV}}$ the solenoidal equation reduces to (22), confirming robustness of the K–V closure.

B Order-of-magnitude estimate of the effective current

The effective current density from (IV) is $\mathbf{j} = \rho_0 \nu \nabla^2 \partial_t \mathbf{A}$. Let L be the exterior length scale and $T \sim L/c$ the propagation time. For a vector potential of amplitude A:

$$|\partial_t \mathbf{A}| \sim \frac{cA}{L}, \qquad |\nabla^2 \mathbf{A}| \sim \frac{A}{L^2}, \qquad |\mathbf{j}| \sim \rho_0\, \nu\, \frac{A}{L^2}\, \frac{c}{L} = \rho_0\, \frac{\nu c A}{L^3}.$$

With $\mathbf{A} = R\mathbf{u}$ and $R = \nu/c^2$, so $A \sim (\nu/c^2)U$:

$$|\mathbf{j}| \sim \frac{\rho_0\, \nu^2\, U}{c\, L^3} = \rho_0\, \frac{\nu U}{L^2}\, \delta, \qquad \delta = \frac{\nu}{cL} \ll 1. \tag{48}$$

The displacement current scales as $|\partial_t \mathbf{D}| = \rho_0 |\partial_t \mathbf{E}| \sim \rho_0 \nu U/L^2$, so $|\mathbf{j}|/|\partial_t \mathbf{D}| \sim \delta \ll 1$. The effective current is $O(\delta)$ relative to the displacement current and vanishes in the ideal limit $\nu \to 0$.

C Derivation of the Lorentz-like force structure

Apply the Lamb vector identity $(\mathbf{u} \cdot \nabla)\mathbf{u} = \frac{1}{2}\nabla u^2 - \mathbf{u} \times \boldsymbol{\omega}$ (with $\boldsymbol{\omega} = \nabla \times \mathbf{u}$) to the exterior Euler equation $\rho_0(\partial_t \mathbf{u} + (\mathbf{u} \cdot \nabla)\mathbf{u}) = -\nabla p'$:

$$\rho_0\, \partial_t \mathbf{u} + \nabla\big(p' + \tfrac{1}{2}\rho_0 u^2\big) = \rho_0\, \mathbf{u} \times \boldsymbol{\omega}. \tag{49}$$

The right-hand side $\rho_0 \mathbf{u} \times \boldsymbol{\omega}$ is the *Lamb force density*; it arises purely from the reorganisation of the advective term and is not circular. Comparing with the Lorentz force density $\mathbf{f} = \sigma(\mathbf{E} + \mathbf{u} \times \mathbf{B})$ gives:

$$\mathbf{B} = R\, \boldsymbol{\omega} = R\, \nabla \times \mathbf{u}, \qquad \mathbf{E} = -R\left(\partial_t \mathbf{u} + \nabla\left(\frac{p'}{\rho_0} + \frac{u^2}{2}\right)\right). \tag{50}$$

In the linearised exterior ($|\mathbf{u}| \ll c$), $\nabla(u^2/2)$ is second order and absorbed into the scalar potential at leading order:

$$\mathbf{E} \approx -R\left(\nabla \frac{p'}{\rho_0} + \partial_t \mathbf{u}\right) = -\nabla\phi - \partial_t \mathbf{A}, \tag{51}$$

consistently with the definitions in Sec. 4.

D Incompressible K–V equations and Poisson equation for ϕ

In the incompressible exterior ($\nabla \cdot \mathbf{u} = 0$), the pressure p' is a Lagrange multiplier enforcing the constraint. Start from the full second-order K–V momentum equation (11):

$$\rho_0\, \partial_{tt} \mathbf{u} = -\nabla \partial_t p' + G \nabla^2 \mathbf{u} + \eta_0 \nabla^2 \partial_t \mathbf{u}. \tag{52}$$

Taking the divergence and using $\nabla \cdot \mathbf{u} = 0$:

$$0 = -\partial_t\big(\nabla^2 p'\big)\,, \tag{53}$$

so $\nabla^2 p'$ is time-independent. With initial rest conditions ($p' = 0$ at $t = 0$) and far-field decay this gives $\nabla^2 p' = 0$, hence $\phi = Rp'/\rho_0$ is harmonic in the source-free exterior.

Multiplying (52) by R/ρ_0 (with $\phi = Rp'/\rho_0$, $\mathbf{A} = R\mathbf{u}$, $c^2 = G/\rho_0$, $\nu = \eta_0/\rho_0$):

$$\partial_{tt}\mathbf{A} + \nabla\partial_t\phi = c^2\nabla^2\mathbf{A} + \nu\nabla^2\partial_t\mathbf{A}. \tag{54}$$

Taking the curl of both sides and using $\nabla \times \nabla f = 0$:

$$\partial_{tt}\mathbf{B} = c^2\nabla^2\mathbf{B} + \nu\nabla^2\partial_t\mathbf{B}, \quad \mathbf{B} \equiv \nabla \times \mathbf{A}. \tag{55}$$

Since $\nabla \cdot \mathbf{A} = 0$ the identity $\nabla^2\mathbf{A} = -\nabla \times \mathbf{B}$ holds, and the solenoidal potential $\mathbf{A}$ satisfies the same equation, consistently with (23):

$$\partial_{tt}\mathbf{A} - c^2\nabla^2\mathbf{A} = \nu\nabla^2\partial_t\mathbf{A}. \tag{56}$$

Near the core the χ-split produces source terms; Gauss's law then gives

$$-\rho_0\nabla^2\phi = \sigma, \tag{57}$$

which reduces to $\nabla^2\phi = 0$ away from the core. The Coulomb gauge $\nabla \cdot \mathbf{A} = R\nabla \cdot \mathbf{u} = 0$ holds identically throughout the exterior.

Comparison with the compressible case. In the barotropic (compressible) formulation, the continuity equation $\partial_t\rho' + \rho_0\nabla \cdot \mathbf{u} = 0$ together with $p' = c^2\rho'$ yields the Lorenz condition $\nabla \cdot \mathbf{A} + (1/c^2)\partial_t\phi = 0$ and a scalar-potential wave equation $\partial_{tt}\phi - c^2\nabla^2\phi = \nu\nabla^2\partial_t\phi$. The two formulations are related by a gauge transformation and predict identical electromagnetic fields $\mathbf{E}$, $\mathbf{B}$.

E Core–exterior decomposition via indicator function

Introduce a smooth cutoff $\chi(\mathbf{r}) \in [0, 1]$ with $\chi \approx 1$ in the core Ω_0 and $\chi \approx 0$ in the exterior $\mathbb{R}^3 \setminus \Omega_0$. Split the fields:

$$p = p_{\text{ext}} + \chi\, p_{\text{core}}, \qquad \mathbf{u} = \mathbf{u}_{\text{ext}} + \chi\, \mathbf{u}_{\text{core}}, \qquad \rho = \rho_0 + \rho'. \tag{58}$$

Derivatives acting on χ produce core-boundary terms:

$$\nabla(\chi f) = \chi\nabla f + f\nabla\chi, \qquad \nabla^2(\chi f) = \chi\nabla^2 f + 2\nabla\chi \cdot \nabla f + f\nabla^2\chi. \tag{59}$$

All source densities (σ, $\mathbf{j}$) are therefore supported near the core boundary ($\nabla\chi \neq 0$) and vanish in the far exterior where $\chi \approx 0$ and $\nabla\chi \approx 0$.

F Hill-vortex shape-mode shear modulus

We derive G_{shape} via the *pressure-jump method*: the radial pressure gradient jump across the unperturbed Hill-vortex boundary, obtained directly from Bernoulli's equation on each side, determines the restoring pressure on the deformed surface without solving any PDE for the perturbed stream function.

Background velocities at the boundary. In the co-moving frame the tangential velocity is continuous across $r = r_0$:

$$u_\theta\big|_{r_0} = \tfrac{3U}{2}\sin\theta \quad \text{(both sides)}, \tag{60}$$

but its radial derivative differs:

$$\frac{\partial u_\theta^{\text{in}}}{\partial r}\bigg|_{r_0} = +\frac{6U}{r_0}\sin\theta, \qquad \frac{\partial u_\theta^{\text{out}}}{\partial r}\bigg|_{r_0} = -\frac{3U}{2r_0}\sin\theta. \tag{61}$$

Both follow from differentiating the interior stream function $\psi_0^{\text{in}} = \frac{3U}{4r_0^2} r^2(r_0^2 - r^2)\sin^2\theta$ and the exterior stream function $\psi_0^{\text{out}} = \frac{U}{2}(r_0^3/r - r^2)\sin^2\theta$.

Pressure gradients. The Bernoulli integrals are $p_{\text{in}} + \frac{1}{2}\rho|\mathbf{u}|^2 = \rho k \psi_0^{\text{in}} + C_{\text{in}}$ (interior, with $k = 15U/2r_0^2$) and $p_{\text{out}} + \frac{1}{2}\rho|\mathbf{u}|^2 = C_{\text{out}}$ (exterior). Differentiating with respect to r at $r = r_0$ (where $u_r = 0$):

$$\frac{\partial p_{\text{in}}}{\partial r}\bigg|_{r_0} = \rho k \frac{\partial \psi_0^{\text{in}}}{\partial r}\bigg|_{r_0} - \rho u_\theta \frac{\partial u_\theta^{\text{in}}}{\partial r}\bigg|_{r_0} = -\frac{45\rho U^2}{4r_0}\sin^2\theta - \frac{9\rho U^2}{r_0}\sin^2\theta = -\frac{81\rho U^2}{4r_0}\sin^2\theta, \tag{62}$$

$$\frac{\partial p_{\text{out}}}{\partial r}\bigg|_{r_0} = -\rho u_\theta \frac{\partial u_\theta^{\text{out}}}{\partial r}\bigg|_{r_0} = +\frac{9\rho U^2}{4r_0}\sin^2\theta. \tag{63}$$

Restoring pressure at the deformed boundary. For a boundary displacement $\delta r = \varepsilon r_0 P_2(\cos\theta)$ (volume-conserving since $\int P_2 \sin\theta\, d\theta = 0$), the first-order pressure imbalance at the perturbed surface is:

$$\delta p = \varepsilon r_0 P_2(\cos\theta)\left[\frac{\partial p_{\text{in}}}{\partial r} - \frac{\partial p_{\text{out}}}{\partial r}\right]_{r_0} = -\frac{45\rho U^2 \varepsilon}{2} P_2(\cos\theta)\sin^2\theta. \tag{64}$$

Where $P_2 > 0$ (poles, boundary moved outward), $\delta p < 0$ means exterior pressure exceeds interior, pushing the boundary back: restoring.

Elastic energy. The work done against the restoring pressure to reach deformation ε:

$$E^{(2)} = -\tfrac{1}{2}\int_0^\pi \delta p \cdot \varepsilon r_0 P_2 \cdot 2\pi r_0^2 \sin\theta\, d\theta = \frac{45\pi\rho U^2 r_0^3 \varepsilon^2}{2} \underbrace{\int_{-1}^{1} (1-\mu^2) P_2^2\, d\mu}_{=4/35} = \frac{18\pi}{7}\rho U^2 r_0^3 \varepsilon^2. \tag{65}$$

The angular integral evaluates as $\int_{-1}^{1} P_2^2\, d\mu - \int_{-1}^{1} \mu^2 P_2^2\, d\mu = \frac{2}{5} - \frac{2}{7} = \frac{4}{35}$, where the second term uses $\mu^2 P_2 = \frac{12}{35}P_4 + \frac{11}{21}P_2 + \frac{2}{15}P_0$ and Legendre orthogonality.

Shear modulus. Setting $E^{(2)} = \frac{1}{2} G_{\text{shape}} \varepsilon^2 V_{\text{core}}$ with $V_{\text{core}} = \frac{4}{3}\pi r_0^3$:

$$G_{\text{shape}} = \frac{2E^{(2)}}{\varepsilon^2 V_{\text{core}}} = \frac{27}{7}\,\rho U^2. \tag{66}$$

In terms of the Hill-vortex circulation $\Gamma = \int_0^{r_0}\int_0^{\pi} \omega_\phi\, r\, dr\, d\theta = 5Ur_0$:

$$\boxed{G_{\text{shape}} = \frac{27\rho\Gamma^2}{175\, r_0^2}.} \tag{67}$$

Comparison with Tkachenko. With $G_{\text{Tk}} = \rho\Gamma^2/(4\pi r_0^2)$:

$$\frac{G_{\text{shape}}}{G_{\text{Tk}}} = \frac{27/(175)}{1/(4\pi)} = \frac{108\pi}{175} \approx 1.94, \qquad G = G_{\text{Tk}} + G_{\text{shape}} \approx \frac{0.234\,\rho\Gamma^2}{r_0^2}. \tag{68}$$

Validity. Equation (67) is a *lower bound*: the derivation uses the background Bernoulli pressure only (frozen-flow approximation) and omits the positive kinetic energy $\frac{\rho}{2}\int |\delta\mathbf{u}|^2 dV$ of the adjusted flow. Energetic stability ($G_{\text{shape}} > 0$) is guaranteed because the continuity of $|\mathbf{u}|^2$ across the Hill-vortex boundary (eq. (60)) ensures the surface term in the second variation of kinetic energy vanishes identically.

References

[1] M. J. M. Hill, "On a spherical vortex," *Phil. Trans. R. Soc. London A* **185**, 213–245 (1894).

[2] H. Lamb, *Hydrodynamics*, 6th ed., Cambridge University Press, Cambridge, 1932.

[3] J. Norbury, "A family of steady vortex rings," *J. Fluid Mech.* **57**, 417–431 (1973).

[4] P. G. Saffman, *Vortex Dynamics*, Cambridge University Press, Cambridge, 1992.

[5] H. Helmholtz, "Über Integrale der hydrodynamischen Gleichungen, welche den Wirbelbewegungen entsprechen," *J. reine angew. Math.* **55**, 25–55 (1858).

[6] R. M. Christensen, *Theory of Viscoelasticity: An Introduction*, Academic Press, New York, 1971.

[7] J. C. Maxwell, "On physical lines of force," *Phil. Mag.* **21**, 161–175, 281–291, 338–348 (1861).

[8] O. Heaviside, *Electrical Papers*, Macmillan, London, 1892.

[9] W. Thomson (Lord Kelvin), "On vortex atoms," *Phil. Mag.* **34**, 15–24 (1867).

[10] A. Bokulich, "Maxwell, Helmholtz, and the unreasonable effectiveness of the method of physical analogy," *Stud. Hist. Philos. Sci.* **50**, 28–37 (2015).

[11] O. Darrigol, "Body–soul duality in nineteenth-century German electrodynamics: Helmholtz and the concept of potential," *Hist. Stud. Phys. Biol. Sci.* **28**, 207–261 (1998).

[12] H. Marmanis, "Analogy between the Navier–Stokes equations and Maxwell's equations: Application to turbulence," *Phys. Fluids* **10**, 1428–1437 (1998).

[13] T. Kambe, "A new formulation of equations of compressible fluids by analogy with Maxwell's equations," *Fluid Dyn. Res.* **42**, 055502 (2010).

[14] S. Panakkal, R. Parameswaran, and M. Vedan, "A geometric algebraic approach to fluid dynamics," *Phys. Fluids* **32**, 056604 (2020).

[15] H. K. Moffatt, "Magnetostatic equilibria and analogous Euler flows of arbitrarily complex topology. Part 1. Fundamentals," *J. Fluid Mech.* **159**, 359–378 (1985).

[16] K. Hu, "The analogy between electromagnetics and hydrodynamics," arXiv:2207.12902 (2022).

[17] J. Ho, H. Kim *et al.*, "Electromagnetism from relativistic fluid dynamics," arXiv:2502.10445 (2025).

[18] V. K. Tkachenko, "On vortex lattices," *Sov. Phys. JETP* **22**, 1282–1286 (1966).

[19] G. Baym, "Tkachenko modes of vortex lattices in rapidly rotating Bose–Einstein condensates," *Phys. Rev. Lett.* **91**, 110402 (2003).

[20] L. Onsager, "Statistical hydrodynamics," *Nuovo Cimento Suppl.* **6**, 279–287 (1949).

[21] R. P. Feynman, "Application of quantum mechanics to liquid helium," *Prog. Low Temp. Phys.* **1**, 17–53 (1955).

[22] N. N. Bogoliubov, "On the theory of superfluidity," *J. Phys. USSR* **11**, 23–32 (1947).

[23] R. J. Donnelly, *Quantized Vortices in Helium II*, Cambridge University Press, Cambridge, 1991.

[24] L. Pitaevskii and S. Stringari, *Bose–Einstein Condensation*, Oxford University Press, Oxford, 2003.

[25] C. J. Pethick and H. Smith, *Bose–Einstein Condensation in Dilute Gases*, Cambridge University Press, Cambridge, 2002.

[26] A. L. Fetter, "Rotating trapped Bose–Einstein condensates," *Rev. Mod. Phys.* **81**, 647–691 (2009).

[27] G. Gauthier *et al.*, "Giant vortex rings and expansion in oblate Bose–Einstein condensates," *Phys. Rev. X* **12**, 011031 (2022).

[28] G. P. Bewley, D. P. Lathrop, and K. R. Sreenivasan, "Superfluid helium: visualization of quantized vortices," *Nature* **441**, 588 (2006).