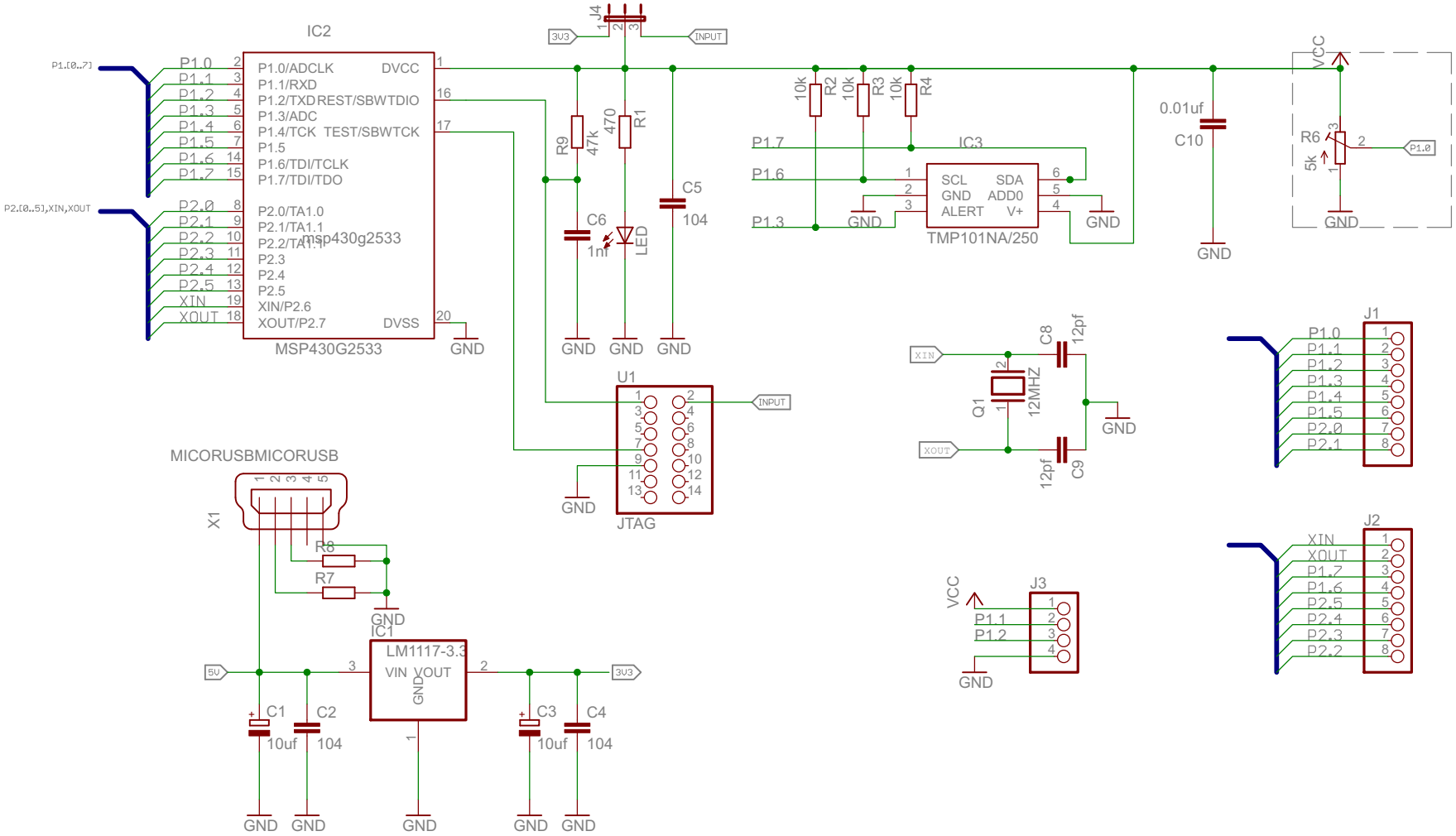

TITLE: untitled

Document Number:

REV:

Date: 2016/4/11 9:21:38

Sheet: 1/1

2016/4/1 15:04:11 (Sheet: 1/1)