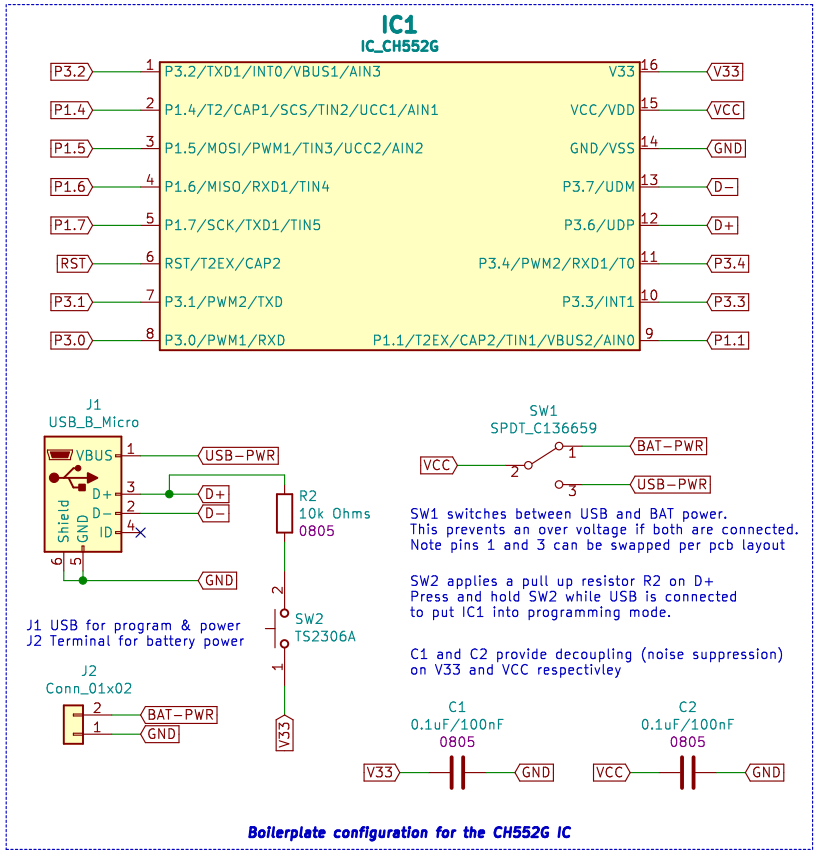

SW1 switches between USB and BAT power.
This prevents an over voltage if both are connected.
Note pins 1 and 3 can be swapped per pcb layout

SW2 applies a pull up resistor R2 on D+
Press and hold SW2 while USB is connected
to put IC1 into programming mode.

C1 and C2 provide decoupling (noise suppression)
on V33 and VCC respectivley

J1 USB for program & power
J2 Terminal for battery power

Boilerplate configuration for the CH552G IC

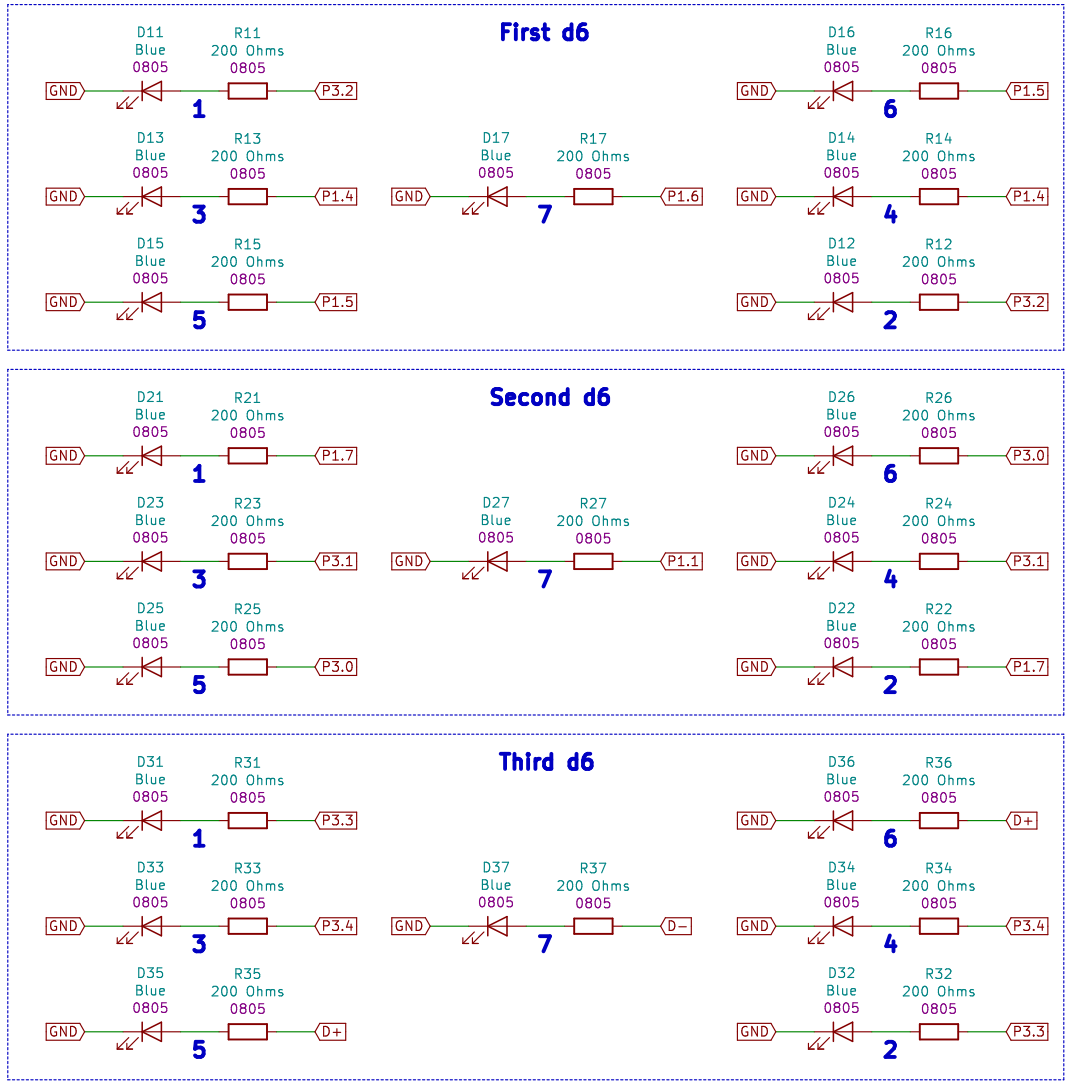

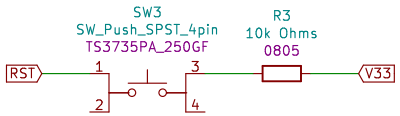

SW3 will be used to reboot the IC
which is the only way I can see to
have a 'roll dice' button given all
the other GPIO pins are used.

Note on D+ and D− in this design:
These are normally assigned as USB pins
so in the code you will need to clear
the bit named bUSB_IO_EN
This will allow thier use as GPIO pins

Four pins will control each die as follows:
(X = ON/HIGH, o = OFF/LOW)

Dice/LED	−7−	1&2	3&4	5&6
1	−X−	−o−	−o−	−o−
2	−o−	−o−	−o−	−X−
3	−X−	−X−	−o−	−o−
4	−o−	−X−	−o−	−X−
5	−X−	−X−	−o−	−X−
6	−o−	−X−	−X−	−X−

Created by @alt_bier a.k.a. Richard Gowen

Sheet: /
File: altbier_pcb_3d6.sch

Title: 3d6 Badge

Size: USLetter	Date: 2021−03−09	**Rev: 2**
KiCad E.D.A. kicad (5.1.9)−1		Id: 1/1