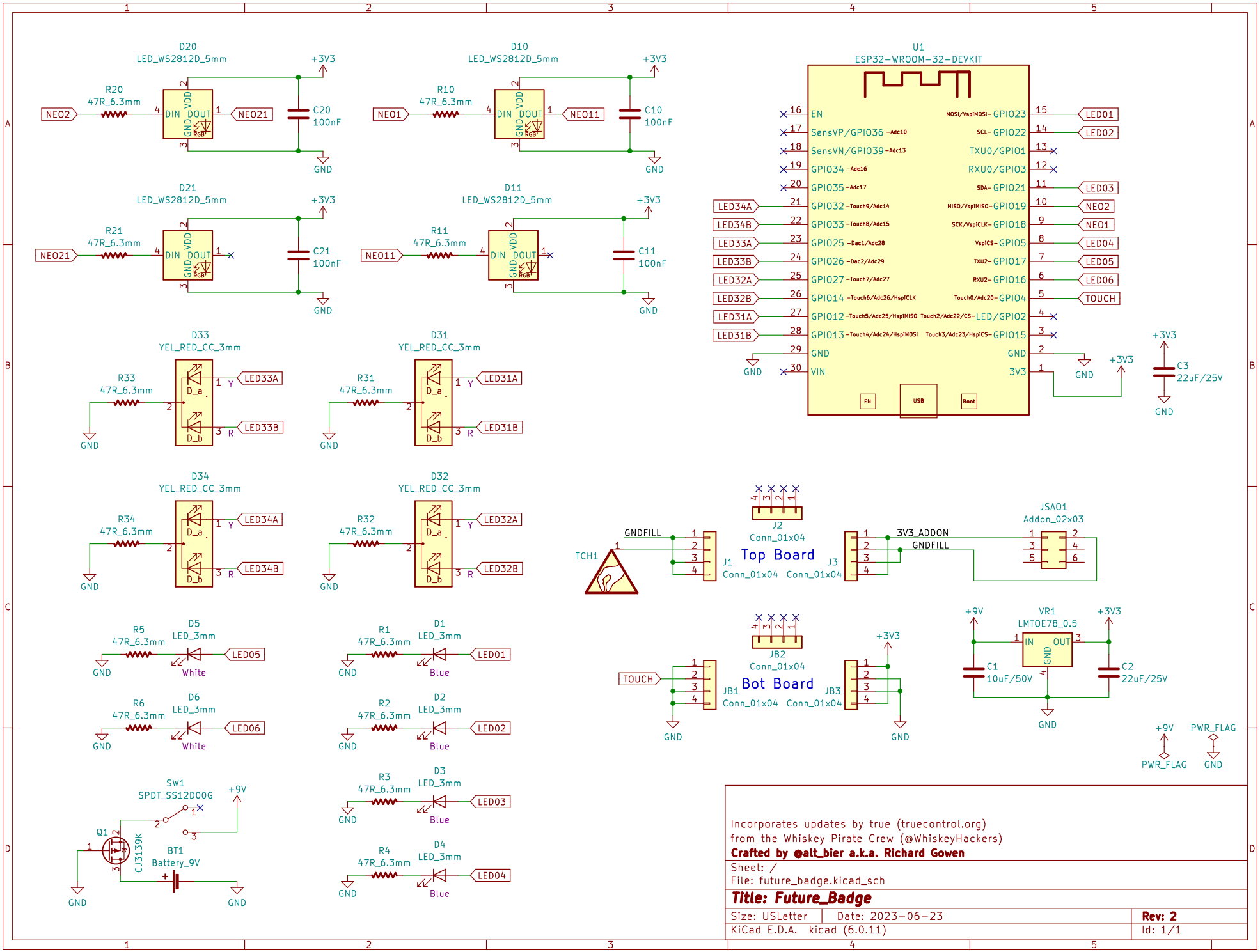

Incorporates updates by true (truecontrol.org)
from the Whiskey Pirate Crew (@WhiskeyHackers)
Crafted by @alt_bier a.k.a. Richard Gowen

Sheet: /
File: future_badge.kicad_sch

Title: Future_Badge

Size: USLetter	Date: 2023-06-23	**Rev: 2**
KiCad E.D.A. kicad (6.0.11)		Id: 1/1