Farnell AN AVNET COMPANY Newark AN AVNET COMPANY element14

EN - For pricing and availability in your local country please visit one of the below links:

DE - Informationen zu Preisen und Verfügbarkeit in Ihrem Land erhalten Sie über die unten aufgeführten Links:

FR - Pour connaître les tarifs et la disponibilité dans votre pays, cliquez sur l'un des liens suivants:

MDT0144ASHR-MULTI

EN
This Datasheet is presented by the manufacturer

DE
Dieses Datenblatt wird vom Hersteller bereitgestellt

FR
Cette fiche technique est présentée par le fabricant

Electra House, 32 Southtown Road
Great Yarmouth, Norfolk
NR31 0DU, England

Telephone +44 (0)1493 602602
Fax +44 (0)1493 665111
Email:sales@midasdisplays.com
www.midasdisplays.com

MDT0144ASHR-MULTI	128 x 128	MULTI Interface	TFT Module
Specification			
Version: 1		Date: 18/05/2019	
Revision			
1	16/05/2019	First issue	

Display Features	
Display Size	1.44”
Resolution	128 x 128
Orientation	Square
Appearance	RGB
Logic Voltage	3.3V
Interface	RGB/MCU/SPI
Brightness	640 cd/m^2
Touchscreen	RTP
Module Size	32.36 x 38.00 x 4.20mm
Operating Temperature	-20°C ~ +70°C
Pinout	35 way FFC
Pitch	0.5mm

Box Quantity	Weight / Display
---	---

* - For full design functionality, please use this specification in conjunction with the ST7735S specification.(Provided Separately)

Display Accessories	
Part Number	**Description**

Optional Variants	
Appearances	**Voltage**

* Description

This is a color active matrix TFT (Thin Film Transistor) LCD (liquid crystal display) that uses amorphous silico n TFT as a switching device. This model is composed of a Transmissive type TFT-LCD Panel, driver circuit, back-light unit. The resolution of a 1.44'TFT-LCD contains 128x128 pixels, and can display up to 65K colors.

*** Features**

-Low Input Voltage: 3.3V(TYP)

-Display Colors of TFT LCD: 65K colors

-Interface: 8/16Bit MCU Interface

3-line/4-line Serial Interface

General Information Items	Specification	Unit	Note
	Main Panel		
Display area(AA)	25.4976(H)*26.496(V) (1.44inch)	mm	-
Driver element	TFT active matrix	-	-
Display colors	65K	colors	-
Number of pixels	128(RGB)*128	dots	-
Pixel arrangement	RGB vertical stripe	-	-
Pixel pitch	0.1992(H)*0.207(V)	mm	-
Viewing angle	6:00	o'clock	-
Controller IC	ST7735S	-	-
Display mode	Transmissive/Normally White	-	-
Operating temperature	-20～+70	℃	-
Storage temperature	-30～+80	℃	-

*** Mechanical Information**

Item		Min.	Typ.	Max.	Unit	Note
Module size	Horizontal(H)		32.36		mm	-
	Vertical(V)		38.0		mm	-
	Depth(D)		4.2		mm	-
Weight			TBD		g	-

Block Diagram

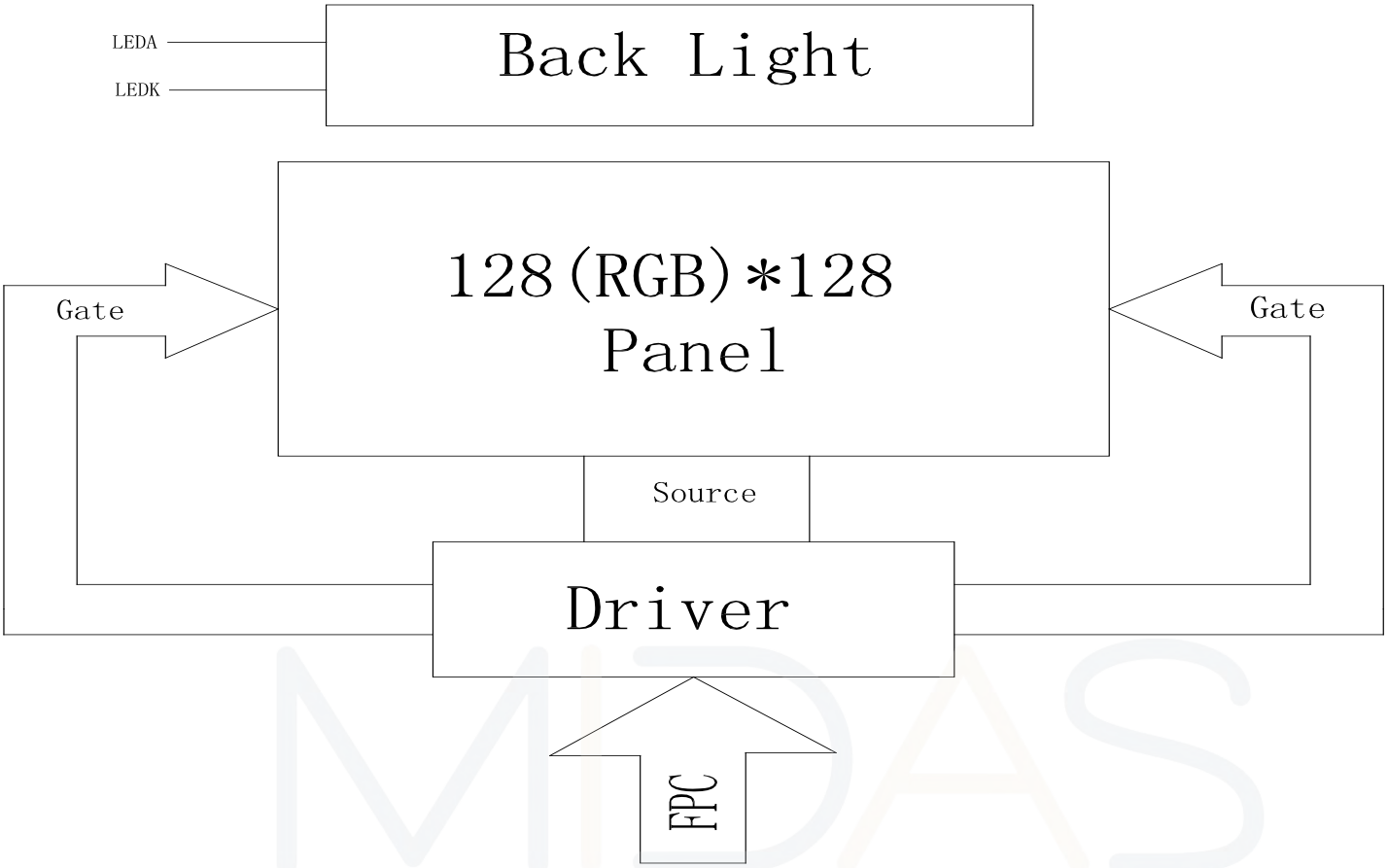

MIDAS
design • manufacture • supply

Outline dimension

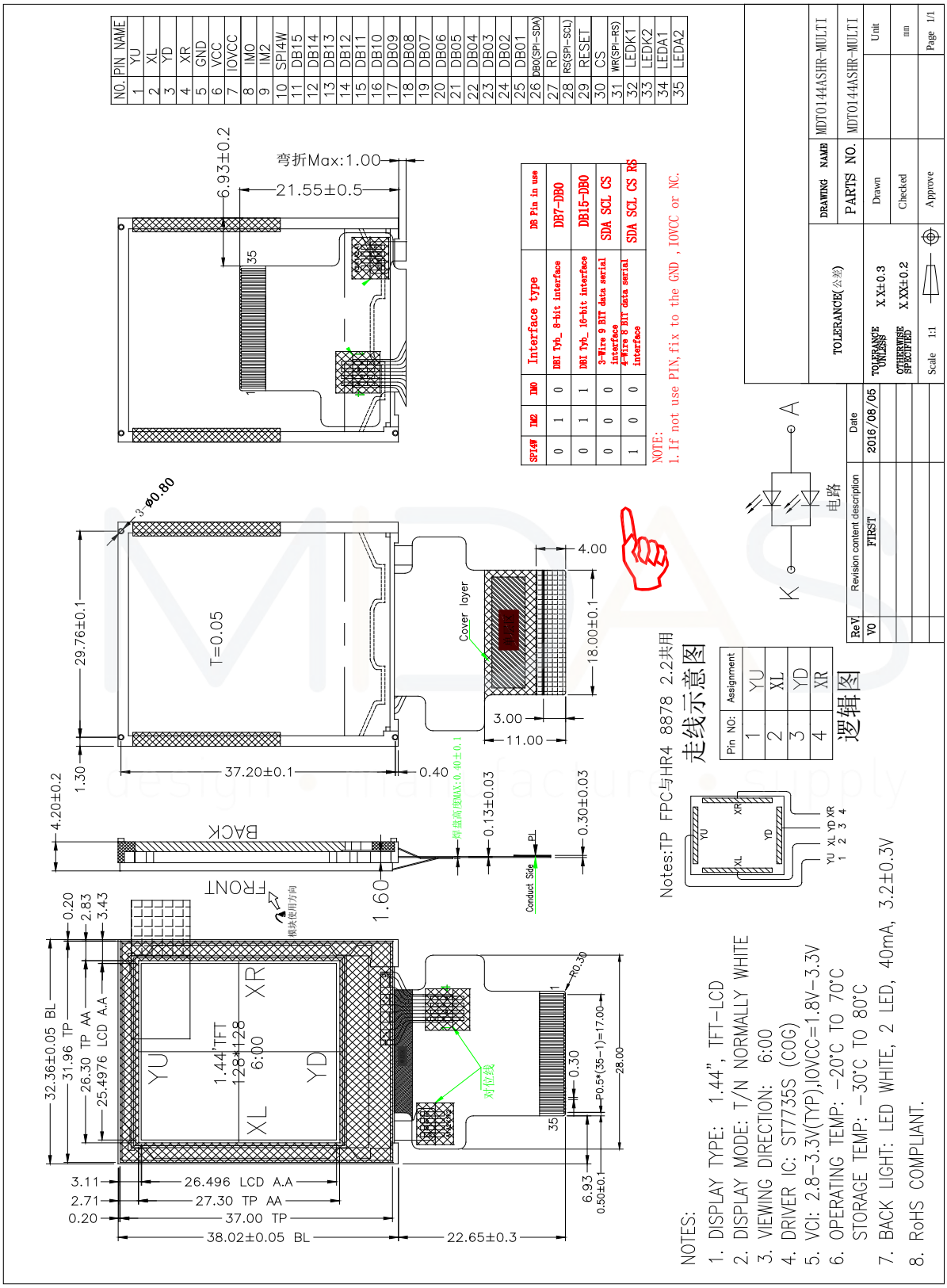

Input terminal Pin Assignment

NO	SYMBOL	DISCRIPTION	I/O
1	YU	Touch panel Top Film Terminal	A/D
2	XL	Touch panel Left Glass Terminal	A/D
3	YD	Touch panel Bottom Film Terminal	A/D
4	XR	Touch panel Right Glass Terminal	A/D
5	GND	Ground.	P
6	VCC	Supply voltage(3.3V).	P
7	IOVCC	Supply voltage(1.65-3.3V).	P
8	IM0	MCU Parallel Interface Type Selection	I
9	IM2		
10	SP14W		

SPI4W	IM2	IM0	Interface type	DB Pin in use
0	1	0	DBI Tyb_ 8-bit interface	DB7-DB0
0	1	1	DBI Tyb_ 16-bit interface	DB15-DB0
0	0	0	3-Wire 9 BIT data serial interface	SDA SCL CS
1	0	0	4-Wire 8 BIT data serial interface	SDA SCL CS RS

11-25	DB15-DB1	DB[15:1] are used as MCU parallel interface data bus. -In serial interface, D[15:1] are not used and should be fixed at VsDDI or DGND level.	I/O
26	DB0(SPI-SDA)	-DB0 is the serial input/output signal in serial interface mode.	I/O
27	RD	-Read Enable in 8080 MCU Parallel Interface. -If not used, please fix this pin at VDDI or DGND level.	I
28	RS(SPI-SCL)	-Display data/command Selection Pin in MCU Interface. -D/CX=’1’: Display Data or Parameter. -D/CX=’0’: Command Data. -In Serial Interface, this is used as SCL. -If not used, please fix this pin at VDDI or DGND level	I
29	RESET	-This signal will reset the device and it must be applied to properly initialize the chip. -Signal is active low	I
30	CS	-Chip Selection Pin	I

		-Low Enable.	
31	WR(SPI-RS)	-Write Enable in MCU Parallel Interface. -In 4-line SPI, this pin is used as D/CX (data/ command selection). -If not used, please fix this pin at VDDI or DGND level.	I
32	LEDK1	Cathode pin OF backlight	P
33	LEDK2	Cathode pin OF backlight	P
34	LEDA1	Anode pin of backlight	P
35	LEDA2	Anode pin of backlight	P

MIDAS
design • manufacture • supply

LCD Optical Characteristics

1. Optical specification

Item		Symbol	Condition	Min.	Typ.	Max.	Unit.	Note
Contrast Ratio		CR	Θ=0 Normal viewing angle	200	300	--		
Color Filter Chromacicity	White	W_X		0.2670	0.3070	0.3470		
		W_Y		0.2969	0.3369	0.3769		
	Red	R_X		0.5385	0.5785	0.6185		
		R_Y		0.2998	0.3398	0.3798		
	Green	G_X		0.3009	0.3409	0.3809		
		G_Y		0.5280	0.5680	0.6080		
	Blue	B_X		0.1104	0.1504	0.1904		
		B_Y		0.0548	0.0948	0.1348		
Viewing angle	Hor.	Θ_L	CR>10	--	60	--		
		Θ_R		--	60	--		
	Ver.	Θ_U		--	60	--		
		Θ_D		--	30	--		
Option View Direction		6:00						

Note.1 These items are measured by C light.
Note.2 Definition of Viewing Angle(θ, ϕ),refer to Fig.1 as below：

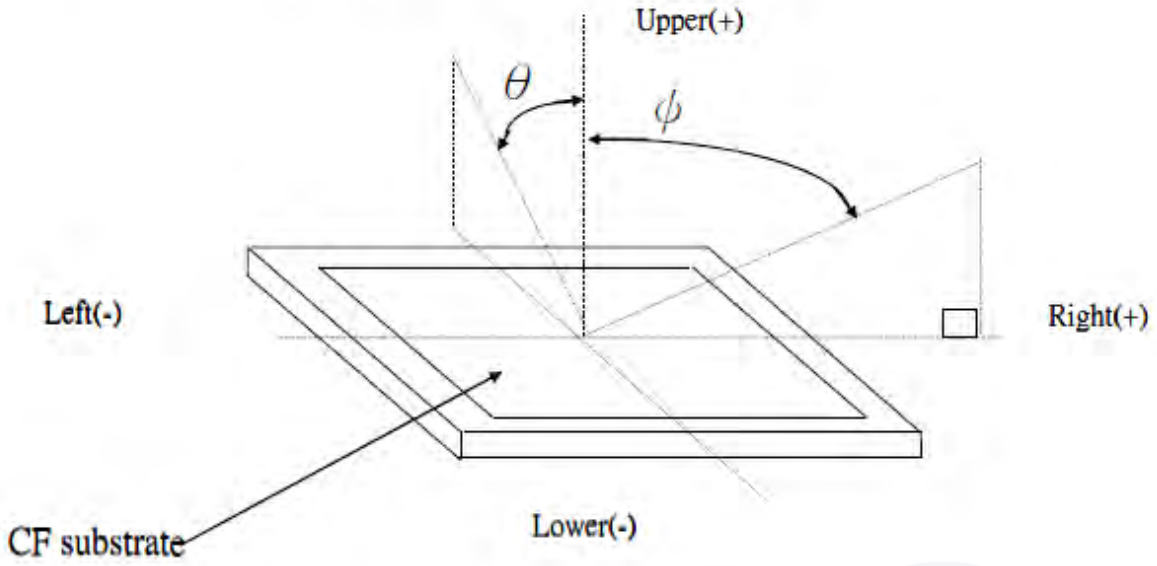

Fig.1 Definition of Viewing Angle

Note.3 Using CPT LC+ EWV Polarizer+Corresponding Backlight, reference only, Measure device：BM-5A (TOPCON)，viewing cone= 1°，I_L=20mA。

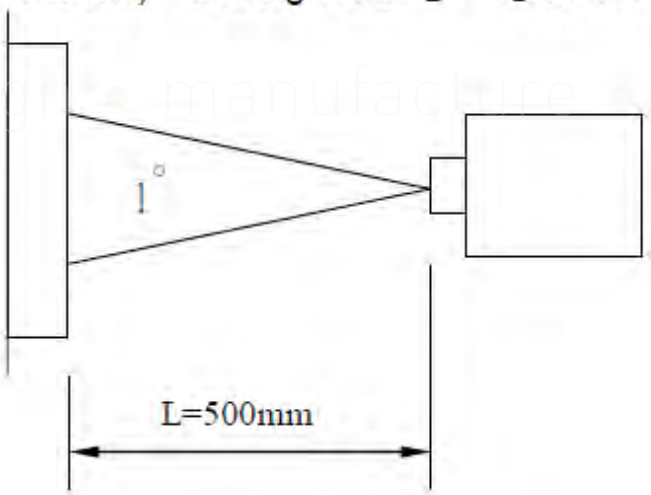

Electrical Characteristics

1. Absolute Maximum Rating (Ta=25 VSS=0V)

Characteristics	Symbol	Min.	Max.	Unit
Digital Supply Voltage	VCC	-0.3	4.8	**V**
Digital interface supple Voltage	IOVCC	-0.3	4.6	**V**
Operating temperature	T_{OP}	-20	+70	℃
Storage temperature	T_{ST}	-30	+80	℃

NOTE: If the absolute maximum rating of even is one of the above parameters is exceeded even momentarily, the quality of the product may be degraded. Absolute maximum ratings, therefore, specify the values exceeding which the product may be physically damaged. Be sure to use the product within the range of the absolute maximum ratings.

2. DC Electrical Characteristics

Characteristics	Symbol	Min.	Typ.	Max.	Unit	Note
Digital Supply Voltage	VCC	2.5	3.3	4.8	V	
Digital interface supple Voltage	IOVCC	1.65	1.8	3.3	V	
Normal mode Current consumption	IDD	--	1.2	--	mA	
Level input voltage	V_{IH}	0.7 IOVCC		IOVCC	V	
	V_{IL}	GND		0.3 IOVCC	V	
Level output voltage	V_{OH}	0.8 IOVCC		IOVCC	V	
	V_{OL}	GND		0.2 IOVCC	V	

3. LED Backlight Characteristics

The back-light system is edge-lighting type with 2 chips White LED

Item	Symbol	Min.	Typ.	Max.	Unit	Note
Forward Current	I_F	30	40	--	mA	
Forward Voltage	V_F	--	3.2	--	V	
LCM Luminance	L_V	590	640	--	cd/m2	Note3
LED life time	Hr	50000	--	--	Hour	Note1,2
Uniformity	AVg	80	--	--	%	Note3

Note (1) LED life time (Hr) can be defined as the time in which it continues to operate under the condition: Ta=25±3 ℃, typical IL value indicated in the above table until the brightness becomes less than 50%.

Note (2) The “LED life time” is defined as the module brightness decrease to 50% original brightness at Ta=25℃ and IL=40mA. The LED lifetime could be decreased if operating IL is larger than 40mA. The constant current driving method is suggested.

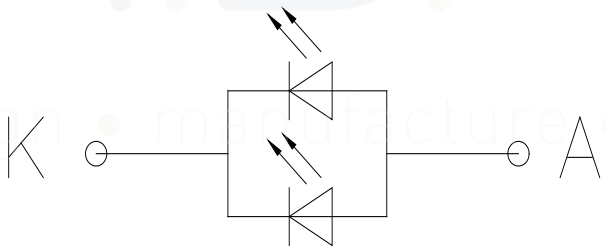

NOTE 3：Luminance Uniformity of these 9 points is defined as below:

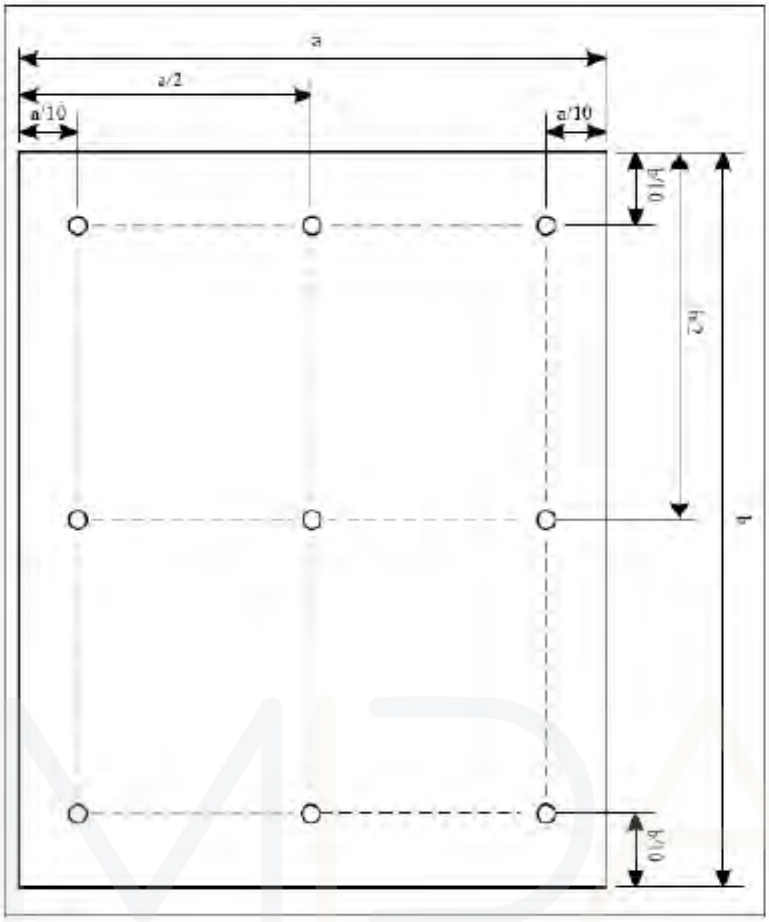

$$\text{Uniformity} = \frac{\text{minimum luminance in 9 points (1-9)}}{\text{maximum luminance in 9 points (1-9)}}$$

$$\text{Luminance} = \frac{\text{Total Luminance of 9 points}}{9}$$

TP Feature

1. Conditions of use and storage

Item	Value(condition)	Note
Temperature range upon operation	Humidity: 20%~90% non dew, condensation -20℃~70℃	In a simple substance
Temperature range upon storage	Humidity: 20%~90% non dew, condensation -30℃~80℃	In a simple substance

2. Electrical property

Item	Value	Note
Maximum voltage	DC5V	
Resistance between terminals	X direction[Film side]:200-600Ω	
	Y direction [Glass side]:300-900Ω	
Insulation resistance	DC 25V 20MΩor above	Connect X + ～X- and Y+ ～Y-, apply 25VDC Between X and Y for perform measurements
Chattering	10 msec or below	
Rating	Voltage is DC 5V	

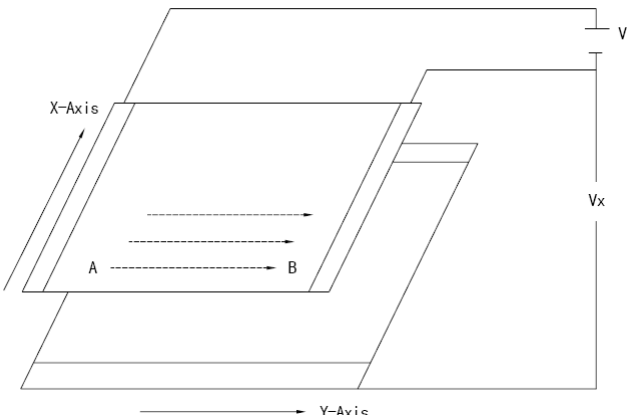

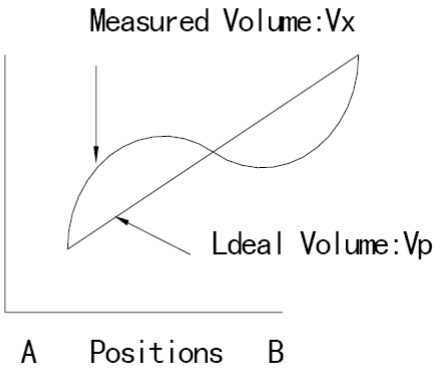

3. Mechanical property

Item	Performance		Note
Input method	Used of an exclusive pen or finger		
Load upon operation	Exclusive pen	60-100g or below	Operation and measurement with a pen must be carried out under the following tip condition s: Stylus pen material : POM(ployacetal) . Tip : Diameter 3.0mm, SR 0.8 mm
	Finger	60-100g or below	Operations and measurement methods simulate d for a finger must be carried out under the fo llowing tip conditions. Material :Silicon rubber (Hardness : 30°Hs) Tip : Diameter 12.0 mm, SR 12.5mm
Surface hardness	Pencil hardness : 3H or above		It complies with the way of test method JIS K5400.

4. Optical property

Item	Performance	Note
Total light transmittance	80% or above	JIS K7105
Haze	5% or below	JIS K7136
Film specification	Polished type with hard coated surface	

AC Characteristic

1. Display Parallel 8/16-bit Interface Timing Characteristics (8080 system)

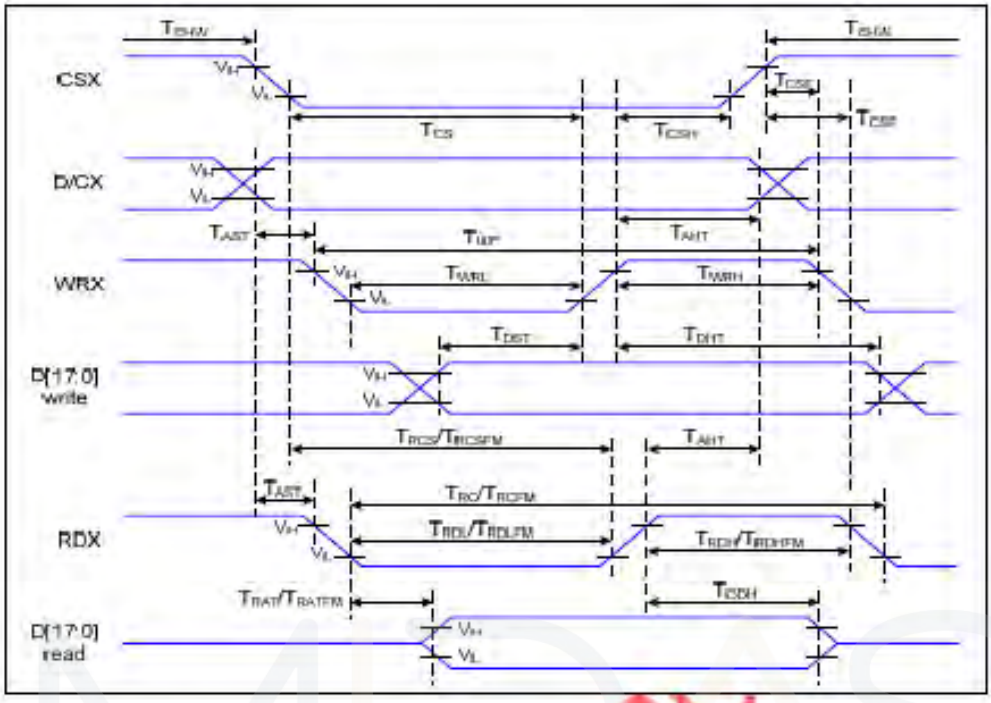

Figure 1 Parallel Interface Timing Characteristics (8080 Series MCU Interface)

Ta=25 ℃, VDDI=1.65~3.7V, VDD=2.5~4.8V

Signal	Symbol	Parameter	Min	Max	Unit	Description
D/CX	TAST	Address Setup Time	0		ns	-
	TAHT	Address Hold Time (Write/Read)	10		ns	
CSX	TCHW	Chip Select "H" Pulse Width	0		ns	-
	TCS	Chip Select Setup Time (Write)	15		ns	
	TRCS	Chip Select Setup Time (Read ID)	45		ns	
	TRCSFM	Chip Select Setup time (Read FM)	355		ns	
	TCSF	Chip Select Wait Time (Write/Read)	10		ns	
	TCSH	Chip Select Hold Time	10		ns	
WRX	TWC	Write Cycle	66		ns	
	TWRH	Control Pulse "H" Duration	15		ns	
	TWRL	Control Pulse "L" Duration	15		ns	
RDX (ID)	TRC	Read Cycle (ID)	160		ns	When Read ID Data
	TRDH	Control Pulse "H" Duration (ID)	90		ns	
	TRDL	Control Pulse "L" Duration (ID)	45		ns	

Preliminary

RDX (FM)	TRCFM	Read Cycle (FM)	450		ns	When Read from Frame Memory
	TRDHFM	Control Pulse "H" Duration (FM)	90		ns	
	TRDLFM	Control Pulse "L" Duration (FM)	355		ns	
D[17:0]	TDST	Data Setup Time	10		ns	For CL=30pF
	TDHT	Data Hold Time	10		ns	
	TRAT	Read Access Time (ID)		40	ns	
	TRATFM	Read Access Time (FM)		340	ns	
	TODH	Output Disable Time	20	80	ns	

Table 4 8080 Parallel Interface Characteristics

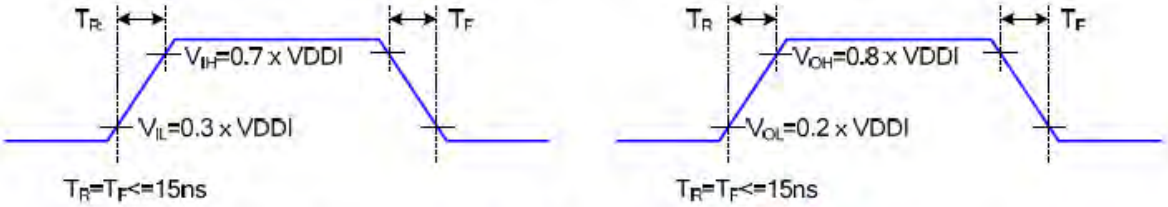

Figure 2 Rising And Falling Timing for Input And Output Signal

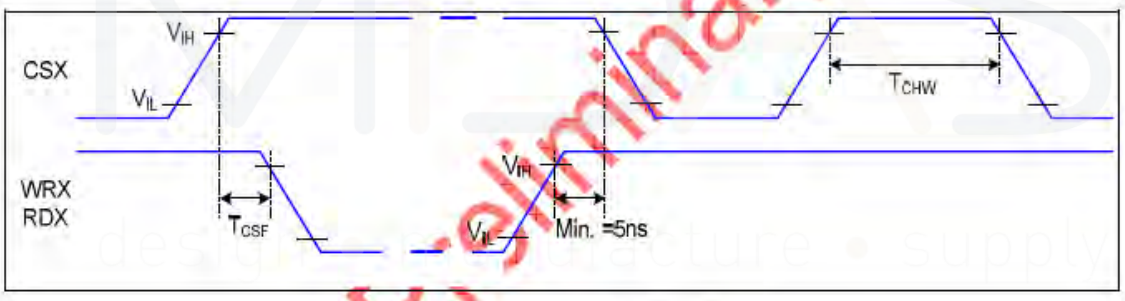

Figure 3 Chip Selection (CSX) Timing

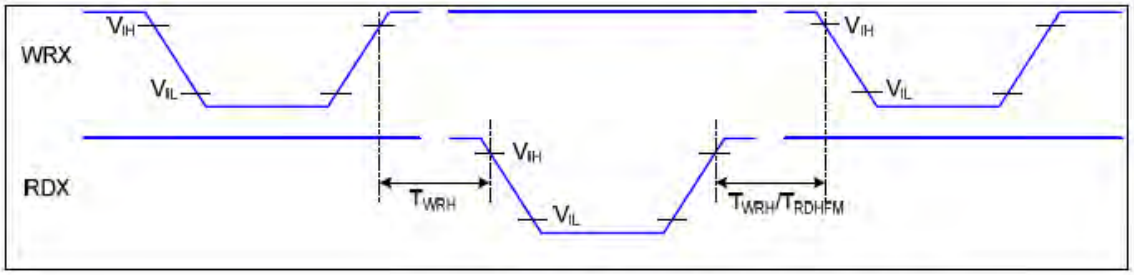

Figure 4 Write-to-Read And Read-to-Write Timing

Note: The rising time and falling time (Tr, Tf) of input signal are specified at 15 ns or less. Logic high and low levels are specified as 30% and 70% of VDDI for Input signals.

Preliminary

2. Display Serial Interface Timing Characteristics (3-line SPI system)

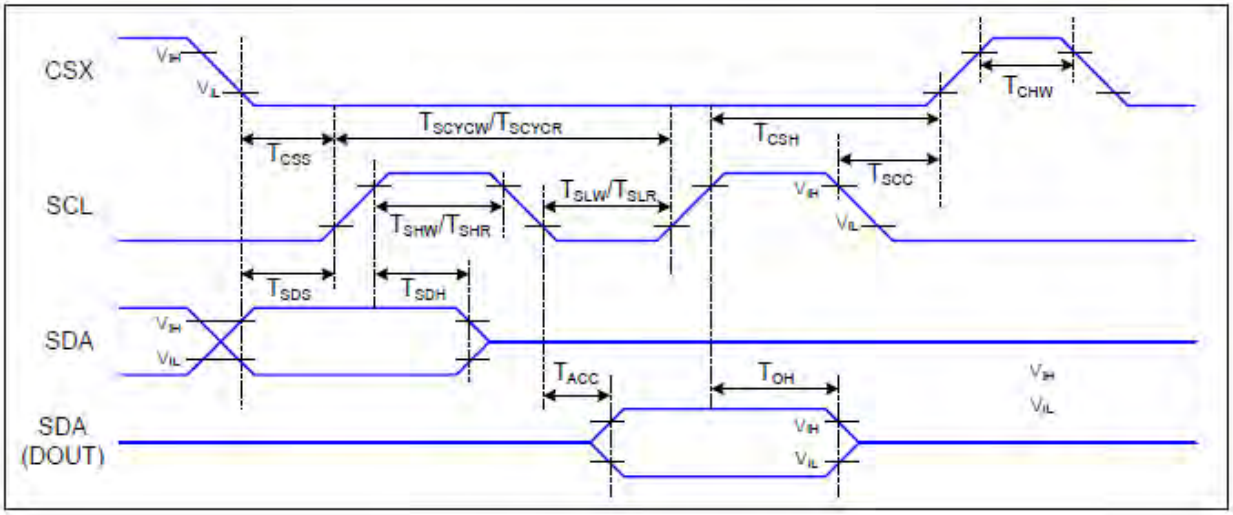

Figure 6 3-line Serial Interface Timing

Ta=25 ℃, VDDI=1.65~3.7V, VDD=2.5~4.8V

Signal	Symbol	Parameter	Min	Max	Unit	Description
CSX	TCSS	Chip Select Setup Time (Write)	15		ns	
	TCSH	Chip Select Hold Time (Write)	15		ns	
	TCSS	Chip Select Setup Time (Read)	60		ns	
	TSCC	Chip Select Hold Time (Read)	65		ns	
	TCHW	Chip Select "H" pulse width	40		ns	
SCL	TSCYCW	Serial Clock Cycle (Write)	66		ns	
	TSHW	SCL "H" Pulse Width (Write)	15		ns	
	TSLW	SCL "L" Pulse Width (Write)	15		ns	
	TSCYCR	Serial Clock Cycle (Read)	150		ns	
	TSHR	SCL "H" Pulse Width (Read)	60		ns	
	TSLR	SCL "L" Pulse Width (Read)	60		ns	
SDA (DIN) (DOUT)	TSDS	Data Setup Time	10		ns	For Maximum CL=30pF For Minimum CL=8pF
	TSDH	Data Hold Time	10		ns	
	TACC	Access Time	10	50	ns	
	TOH	Output Disable Time	15	50	ns	

Table 6 3-line Serial Interface Characteristics

Note : The rising time and falling time (Tr, Tf) of input signal are specified at 15 ns or less. Logic high and low levels are specified as 30% and 70% of VDDI for Input signals.

Preliminary

3. Display Serial Interface Timing Characteristics (4-line SPI system)

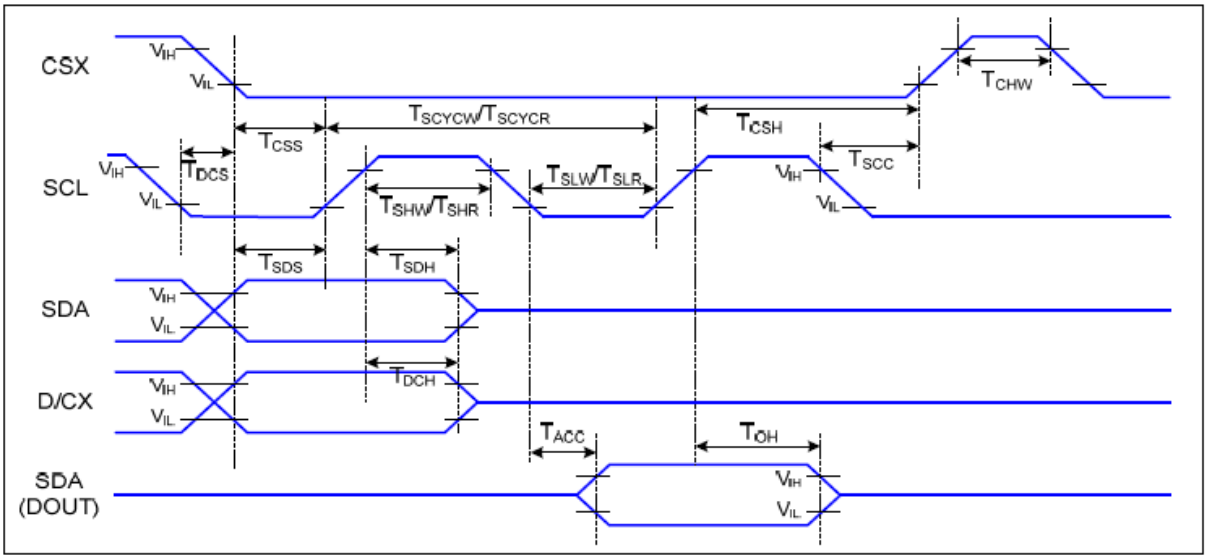

Figure 7 4-line Serial Interface Timing

Ta=25 ℃, VDDI=1.65~3.7V, VDD=2.5~4.8V

Signal	Symbol	Parameter	MIN	MAX	Unit	Description
CSX	TCSS	Chip Select Setup Time (Write)	45		ns	
	TCSH	Chip Select Hold Time (Write)	45		ns	
	TCSS	Chip Select Setup Time (Read)	60		ns	
	TSCC	Chip Select Hold Time (Read)	65		ns	
	TCHW	Chip Select "H" Pulse Width	40		ns	
SCL	TSCYCW	Serial Clock Cycle (Write)	66		ns	-Write Command & Data Ram
	TSHW	SCL "H" Pulse Width (Write)	15		ns	
	TSLW	SCL "L" Pulse Width (Write)	15		ns	
	TSCYCR	Serial Clock Cycle (Read)	150		ns	-Read Command & Data Ram
	TSHR	SCL "H" Pulse Width (Read)	60		ns	
	TSLR	SCL "L" Pulse Width (Read)	60		ns	
D/CX	TDCS	D/CX Setup Time	10		ns	
	TDCH	D/CX Hold Time	10		ns	
SDA (DIN) (DOUT)	TSDS	Data Setup Time	10		ns	For Maximum CL=30pF For Minimum CL=8pF
	TSDH	Data Hold Time	10		ns	
	TACC	Access Time	10	50	ns	
	TOH	Output Disable Time	15	50	ns	

Table 7 4-line Serial Interface Characteristics

Note : The rising time and falling time (Tr, Tf) of input signal are specified at 15 ns or less. Logic high and low levels are specified as 30% and 70% of VDDI for Input signals.

Preliminary

4. Reset Timing Characteristics

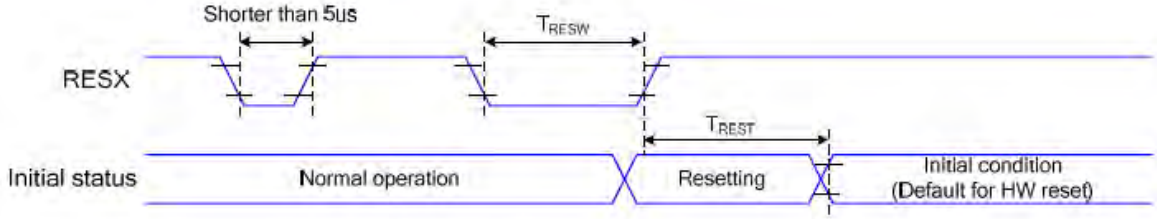

Related Pins	Symbol	Parameter	MIN	MAX	Unit
RESX	tRESW	Reset Pulse Duration	10	-	us
	tREST	Reset Cancel	-	5	ms
				120	ms

Table 14 Reset Timing

Notes:

1. The reset cancel includes also required time for loading ID bytes, VCOM setting and other settings from NVM (or similar device) to registers. This loading is done every time when there is HW reset cancel time (tRT) within 5 ms after a rising edge of RESX.

2. Spike due to an electrostatic discharge on RESX line does not cause irregular system reset according to the table below:

RESX Pulse	Action
Shorter than 5us	Reset Rejected
Longer than 9us	Reset
Between 5us and 9us	Reset Starts

Preliminary

3. During the Resetting period, the display will be blanked (The display is entering blanking sequence, which maximum time is 120 ms, when Reset Starts in Sleep Out –mode. The display remains the blank state in Sleep In -mode.) and then return to Default condition for Hardware Reset.

4. Spike Rejection also applies during a valid reset pulse as shown below:

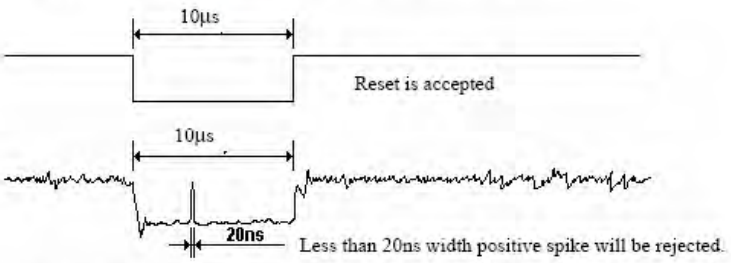

5. When Reset applied during Sleep In Mode.

6. When Reset applied during Sleep Out Mode.

7. It is necessary to wait 5msec after releasing RESX before sending commands. Also Sleep Out command cannot be sent for 120msec.

LCD Module Out-Going Quality Level

1. VISUAL & FUNCTION INSPECTION STANDARD

1.1 Inspection conditions

Inspection performed under the following conditions is recommended.

Temperature : 25±5℃
Humidity : 65%±10%RH
Viewing Angle : Normal viewing Angle.
Illumination: Single fluorescent lamp (300 to 700Lux)
Viewing distance:30-50cm

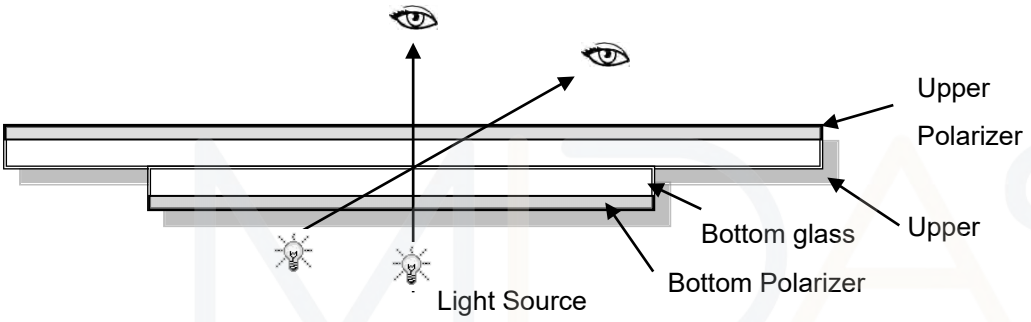

1.2 Definition

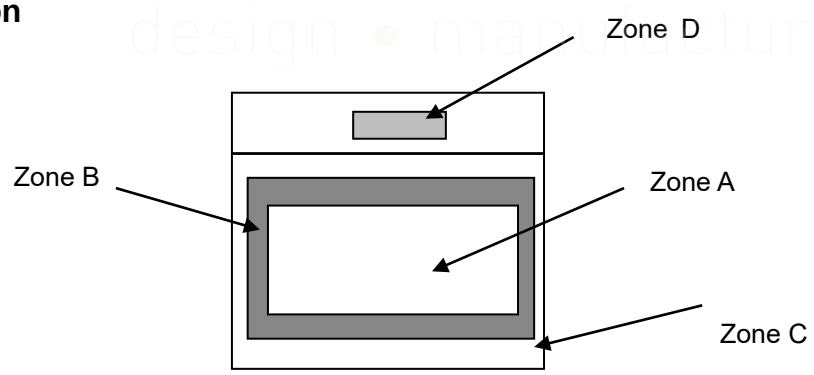

Zone A : Effective Viewing Area(Character or Digit can be seen)
Zone B : Viewing Area except Zone A
Zone C : Outside (Zone A+Zone B) which can not be seen after assembly by customer .)
Zone D : IC Bonding Area
Note:
As a general rule ,visual defects in Zone C can be ignored when it doesn't effect product function or appearance after assembly by customer

1.3 Sampling Plan

According to GB/T 2828-2003 ; , normal inspection, Class Ⅱ

AQL:

Major defect	Minor defect
0.65	1.5

LCD: Liquid Crystal Display , TP: Touch Panel , LCM: Liquid Crystal Module

No	Items to be inspected	Criteria	Classification of defects
1	Functional defects	1) No display, Open or miss line 2) Display abnormally, Short 3) Backlight no lighting, abnormal lighting. 4) TP no function	Major
2	Missing	Missing component	
3	Outline dimension	Overall outline dimension beyond the drawing is not allowed	
4	Color tone	Color unevenness, refer to limited sample	Minor
5	Spot Line defect	Light dot, Dim spot,Polarizer Bubble ; Polarizer accidented spot.	
6	Soldering appearance	Good soldering , Peeling off is not allowed.	
7	LCD/Polarizer/TP	Black/White spot/line, scratch, crack, etc.	

MIDAS
design • manufacture • supply

1.4 Criteria (Visual)

<table>
<tr><th>Number</th><th>Items</th><th>Criteria(mm)</th></tr>
<tr><td rowspan="3">1.0 LCD Crack/Broken
NOTE:
X: Length
Y: Width
Z: Height
L: Length of ITO,
T: Height of LCD</td><td>(1) The edge of LCD broken</td><td> 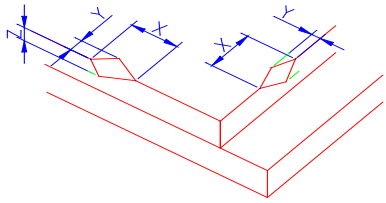

<table>
<tr><th>X</th><th>Y</th><th>Z</th></tr>
<tr><td>≤3.0mm</td><td><Inner border line of the seal</td><td>≤T</td></tr>
</table></td></tr>
<tr><td>(2)LCD corner broken</td><td> 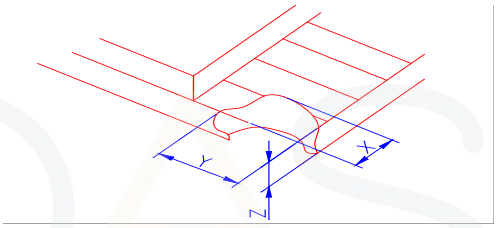

<table>
<tr><th>X</th><th>Y</th><th>Z</th></tr>
<tr><td>≤3.0mm</td><td>≤L</td><td>≤T</td></tr>
</table></td></tr>
<tr><td>(3) LCD crack</td><td> 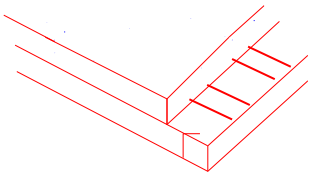

Crack
Not allowed</td></tr>
</table>

2.0

Spot defect

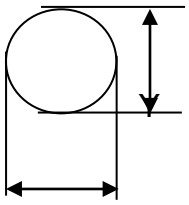

X

Φ=(X+Y)/2

① light dot（LCD/TP/Polarizer black/white spot , light dot, pinhole, dent, stain）

Zone / Size (mm)	Acceptable Qty		
	A	B	C
Φ≤0.10	Ignore		Ignore
0.10<Φ≤0.20	3(distance≧10mm)		
0.20<Φ≤0.25	2		
Φ>0.3	0		

②Dim spot（LCD/TP/Polarizer dim dot, light leakage、dark spot）

Zone / Size (mm)	Acceptable Qty		
	A	B	C
Φ≤0.1	Ignore		Ignore
0.10<Φ≤0.20	3(distance≧10mm)		
0.20<Φ≤0.25	2		
Φ>0.3	0		

③ Polarizer accidented spot

Zone / Size (mm)	Acceptable Qty		
	A	B	C
Φ≤0.2	Ignore		Ignore
0.3<Φ≤0.5	2(distance≧10mm)		
Φ>0.5	0		

④Pixel bad points（light dot，Dim dot，color dot）

Zone / Size (mm)	Acceptable Qty		
	A	B	C
Φ≤0.1	Ignore		Ignore
0.15<Φ≤0.2	2(distance≧10mm)		
Φ>0.2	0		

⑤ Polarizer Bubble

Zone / Size (mm)	Acceptable Qty		
	A	B	C
Φ≤0.2	Ignore		Ignore
0.3<Φ≤0.4	3(distance≧10 m)		
0.4<Φ≤0.5	2		
Φ>0.5	0		

<table>
<tr><td>3.0</td><td>Line defect (LCD/TP /Polarizer backlight black/white line, scratch, stain)</td><td>
<table>
<tr><td rowspan="2">Width(mm)</td><td rowspan="2">Length(mm)</td><td colspan="3">Acceptable Qty</td></tr>
<tr><td>A</td><td>B</td><td>C</td></tr>
<tr><td>Φ≤0.03</td><td>Ignore</td><td colspan="2">Ignore</td><td rowspan="3">Ignore</td></tr>
<tr><td>0.03<W≤0.04</td><td>L≤3.0</td><td colspan="2">N≤2</td></tr>
<tr><td>0.04<W≤0.05</td><td>L≤2.0</td><td colspan="2">N≤1</td></tr>
<tr><td>0.05<W</td><td colspan="4">Define as spot defect</td></tr>
</table>
</td></tr>
<tr><td>4.0</td><td>Electronic Components SMT</td><td>Not allow missing parts, solderless connection, cold solder joint, mis match, The positive and negative polarity opposite</td></tr>
<tr><td>5.0</td><td>Display color& Brightness</td><td>1. Color : Measuring the color coordinates, The measurement standard according to the datasheet or samples.
2. Brightness : Measuring the brightness of White screen, The measurement standard according to the datasheet or Samples.</td></tr>
<tr><td>6.0</td><td>LCD Mura</td><td>By 5% ND filter invisible.</td></tr>
</table>

MIDAS
design • manufacture • supply

<table>
<tr><td>7.0</td><td>RTP Related</td><td>TP film bubble/ accidented spot</td><td>
<table>
<tr><td rowspan="2">Size Φ(mm)</td><td colspan="3">Acceptable Qty</td></tr>
<tr><td>A</td><td>B</td><td>C</td></tr>
<tr><td>Φ≤0.1</td><td colspan="2">Ignore</td><td rowspan="4">Ignore</td></tr>
<tr><td>0.1<Φ≤0.2</td><td colspan="2">3（distance≧10mm）</td></tr>
<tr><td>0.25<Φ≤0.3</td><td colspan="2">2</td></tr>
<tr><td>Φ>0.3</td><td colspan="2">0</td></tr>
</table>
</td></tr>
</table>

<table>
<tr><td></td><td></td><td>TP film scratch</td><td>
<table>
<tr><td rowspan="2">Width(mm)</td><td rowspan="2">Length(mm)</td><td colspan="3">Acceptable Qty</td></tr>
<tr><td>A</td><td>B</td><td>C</td></tr>
<tr><td>Φ≤0.03</td><td>Ignore</td><td colspan="2">Ignore</td><td rowspan="3">Ignore</td></tr>
<tr><td>0.03<W≤0.04</td><td>L≤3.0</td><td colspan="2">N≤2</td></tr>
<tr><td>0.04<W≤0.05</td><td>L≤2.0</td><td colspan="2">N≤1</td></tr>
<tr><td>0.05<W</td><td colspan="4">Define as spot defect</td></tr>
</table>
</td></tr>
<tr><td></td><td></td><td>Assembly deflection</td><td>beyond the edge of backlight ≤0.2mm</td></tr>
<tr><td></td><td></td><td>Bulge (undulation included)</td><td>The ITO film plumped below 0.40mm, it’s ok.
</td></tr>
<tr><td></td><td></td><td>Newton Ring</td><td>Newton Ring area>1/3 TP area NG
Newton Ring area≤1/3 TP area OK</td><td>
</td></tr>
</table>

<table>
<tr>
<td></td>
<td></td>
<td>TP corner broken
X：length
Y：width
Z：height</td>
<td>
<table>
<tr><td>X</td><td>Y</td><td>Z</td></tr>
<tr><td>X≤3mm</td><td>Y≤3mm</td><td>Z<COVER thickness</td></tr>
</table>
*
*Circuitry broken is not allowed.
</td>
<td> 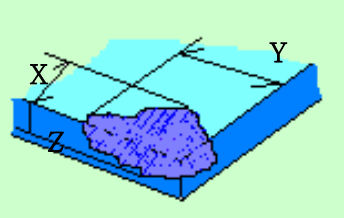
</td>
</tr>
<tr>
<td></td>
<td></td>
<td>TP edge broken
X：length
Y：width
Z：height</td>
<td>
<table>
<tr><td>X</td><td>Y</td><td>Z</td></tr>
<tr><td>X≤4mm</td><td>Y≤2mm</td><td>Z<COVER thickness</td></tr>
</table>
* Circuitry broken is not allowed.
</td>
<td> 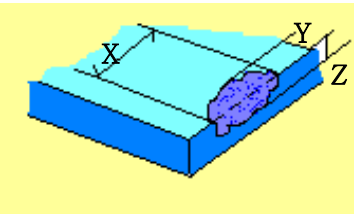
</td>
</tr>
</table>

Criteria (functional items)

Number	Items	Criteria (mm)
1	No display	Not allowed
2	Missing segment	Not allowed
3	Short	Not allowed
4	Backlight no lighting	Not allowed
5	TP no function	Not allowed

Reliability Test Result

1. Condition

Item	Condition	Inspection after test
High Temperature Operating	70℃,96H	Inspection after 2~4hours storage at room temperature, the sample shall be free from defects: 1.Air bubble in the LCD; 2.Non-display; 3.Missing segments/line; 4.Glass crack; 5. Current IDD is twice higher than initial value.
Low Temperature Operating	-20℃, 96HR	
High Temperature Storage	80℃, 96HR	
Low Temperature Storage	-30℃, 96HR	
High Temperature & High Humidity Operating	+60℃, 90% RH ,96 hours.	
Thermal Shock (Non-operation)	-30℃,30 min ↔ 80℃,30 min, Change time: 5min 20CYC.	
ESD test	C=150pF, R=330,5points/panel Air:±8KV, 5times; Contact:±6KV, 5 times; (Environment: 15℃~35℃, 30%~60%).	
Vibration (Non-operation)	Frequency range: 10~55Hz, Stroke: 1.5mm Sweep: 10Hz~55Hz~10Hz 2 hours for each direction of X.Y.Z. (6 hours for total) (Package condition).	
Box Drop Test	1 Corner 3 Edges 6 faces,80㎝(MEDIUM BOX)	

Remark:

1. The test samples should be applied to only one test item.
2. Sample size for each test item is 5~10pcs.
3. For Damp Proof Test, Pure water(Resistance＞10MΩ) should be used.
4. In case of malfunction defect caused by ESD damage, if it would be recovered to normal state after resetting, it would be judged as a good part.
5. Failure Judgment Criterion: Basic Specification, Electrical Characteristic, Mechanical Characteristic, Optical Characteristic.

Cautions and Handling Precautions

1. Handling and Operating the Module

(1) When the module is assembled, it should be attached to the system firmly.
Do not warp or twist the module during assembly work.
(2) Protect the module from physical shock or any force. In addition to damage, this may cause improper operation or damage to the module and back-light unit.
(3) Note that polarizer is very fragile and could be easily damaged. Do not press or scratch the surface.
(4) Do not allow drops of water or chemicals to remain on the display surface.
If you have the droplets for a long time, staining and discoloration may occur.
(5) If the surface of the polarizer is dirty, clean it using some absorbent cotton or soft cloth.
(6) The desirable cleaners are water, IPA (Isopropyl Alcohol) or Hexane.
Do not use ketene type materials (ex. Acetone), Ethyl alcohol, Toluene, Ethyl acid or Methyl chloride. It might permanent damage to the polarizer due to chemical reaction.
(7) If the liquid crystal material leaks from the panel, it should be kept away from the eyes or mouth. In case of contact with hands, legs, or clothes, it must be washed away thoroughly with soap.
(8) Protect the module from static; it may cause damage to the CMOS ICs.
(9) Use finger-stalls with soft gloves in order to keep display clean during the incoming inspection and assembly process.
(10) Do not disassemble the module.
(11) Protection film for polarizer on the module shall be slowly peeled off just before use so that the electrostatic charge can be minimized.
(12) Pins of I/F connector shall not be touched directly with bare hands.
(13) Do not connect, disconnect the module in the “Power ON” condition.
(14) Power supply should always be turned on/off by the item 6.1 Power On Sequence &6.2 Power Off Sequence

2. Storage and Transportation.

(1) Do not leave the panel in high temperature, and high humidity for a long time.
It is highly recommended to store the module with temperature from 0 to 35 ℃ and relative humidity of less than 70%
(2) Do not store the TFT-LCD module in direct sunlight.
(3) The module shall be stored in a dark place. When storing the modules for a long time, be sure to adopt effective measures for protecting the modules from strong ultraviolet radiation, sunlight, or fluorescent light.
(4) It is recommended that the modules should be stored under a condition where no condensation is allowed. Formation of dewdrops may cause an abnormal operation or a failure of the module.
In particular, the greatest possible care should be taken to prevent any module from being operated where condensation has occurred inside.
(5) This panel has its circuitry FPC on the bottom side and should be handled carefully in order not to be stressed.

Farnell AN AVNET COMPANY Newark AN AVNET COMPANY element14

EN - For pricing and availability in your local country please visit one of the below links:

DE - Informationen zu Preisen und Verfügbarkeit in Ihrem Land erhalten Sie über die unten aufgeführten Links:

FR - Pour connaître les tarifs et la disponibilité dans votre pays, cliquez sur l'un des liens suivants:

MDT0144ASHR-MULTI

EN
This Datasheet is presented by the manufacturer

DE
Dieses Datenblatt wird vom Hersteller bereitgestellt

FR
Cette fiche technique est présentée par le fabricant