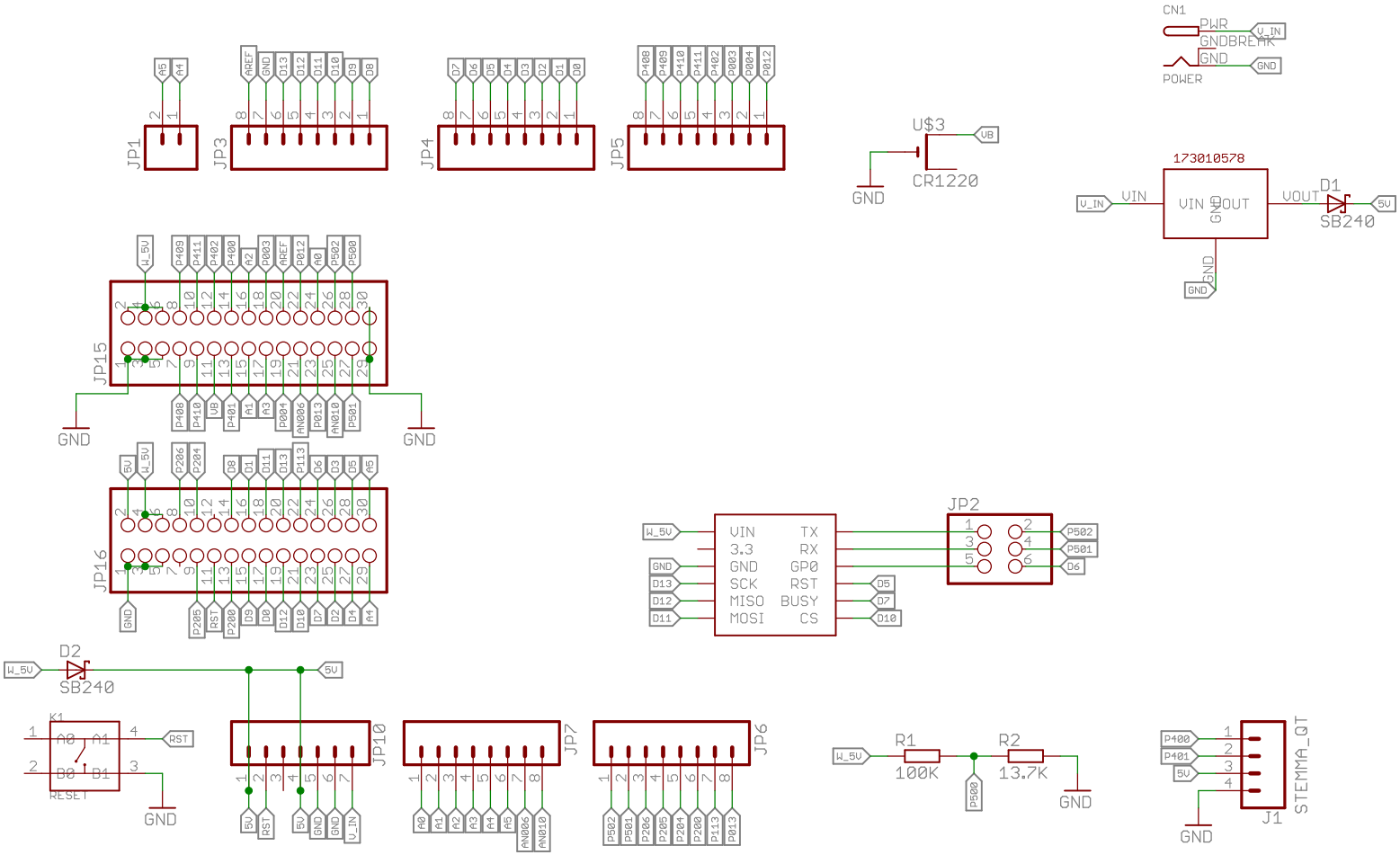

(c) 2024, Guglielmo Braguglia
Muralto (TI) - Switzerland

TITLE: WeAct_BOARD_V6

Document Number:

REV:

Date: not saved!

Sheet: 1/1