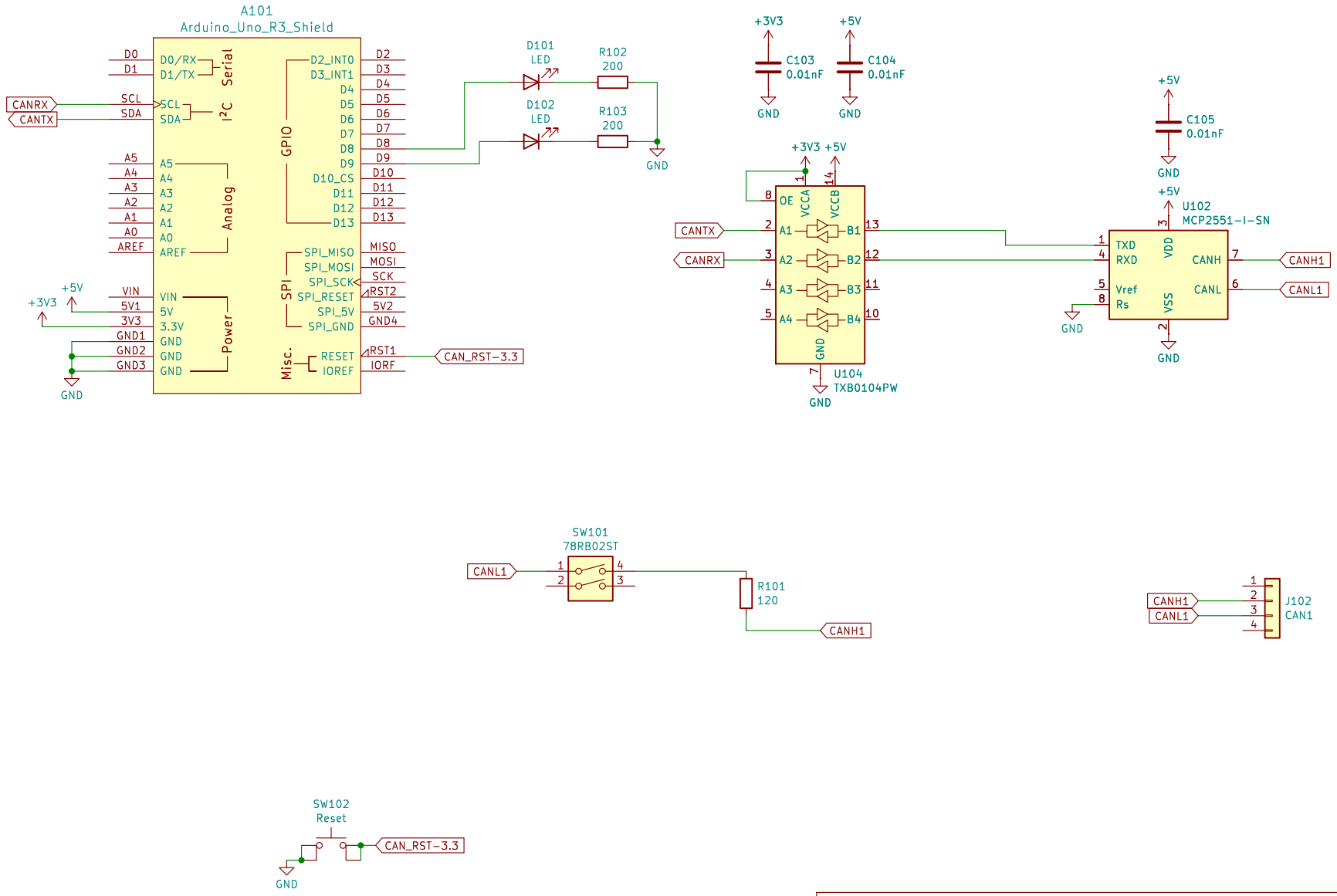

bit-builder.com

Sheet: /

File: can-bridge.kicad_sch

Title: CAN Bridge

Size: USLetter	Date:	Rev:
KiCad E.D.A. 8.0.1		Id: 1/1