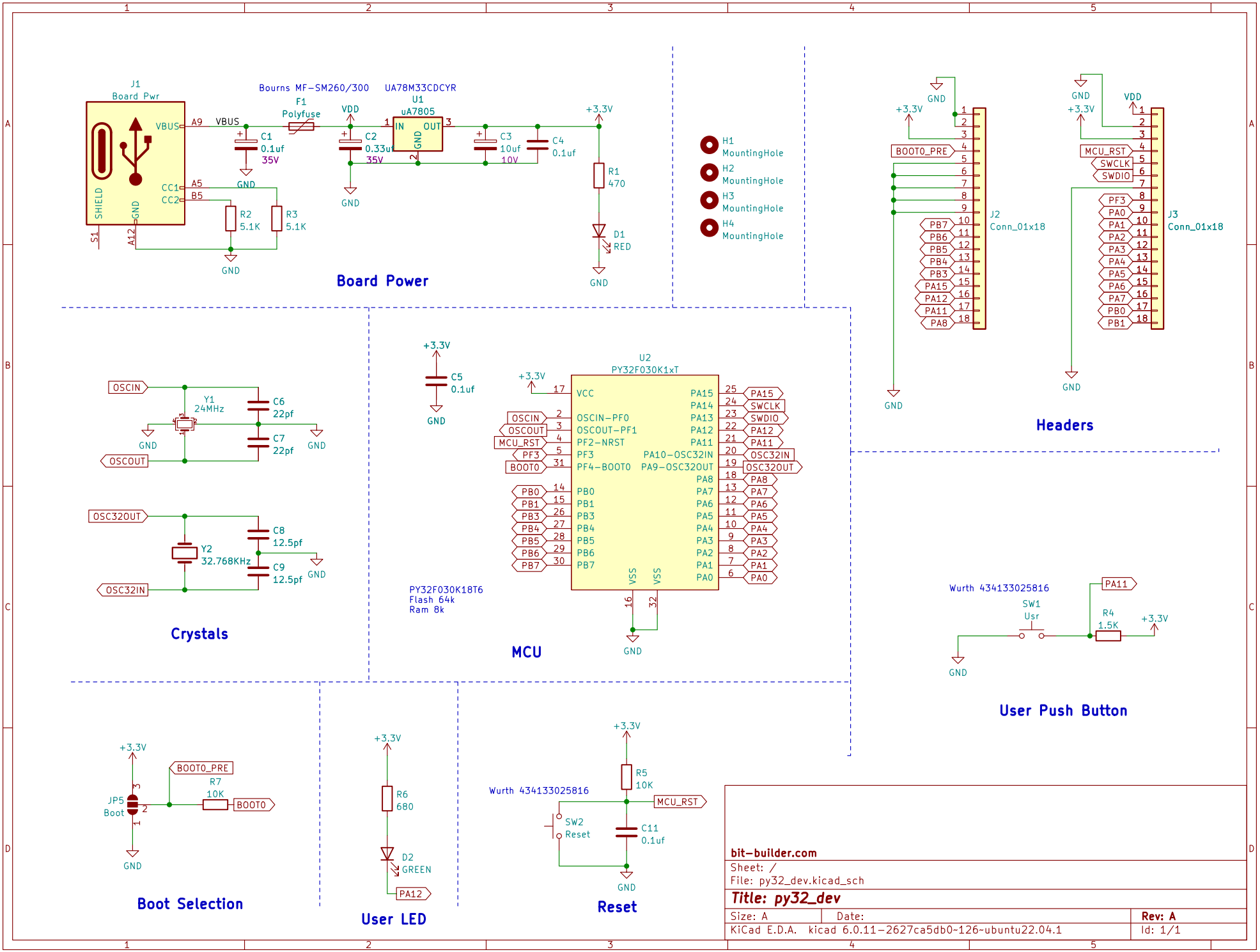
J1
Board Pwr
VBUS
A9
VBUS
C1
0.1uf
35V
GND
Bourns MF-SM260/300
F1
Polyfuse
VDD
C2
0.33uf
35V
UA78M33CDCYR
U1
uA7805
IN
OUT
GND
C3
10uf
10V
C4
0.1uf
+3.3V
R1
470
D1
RED
CC1
CC2
A5
B5
R2
5.1K
R3
5.1K
SHIELD
GND
S1
A12
Board Power
H1
MountingHole
H2
MountingHole
H3
MountingHole
H4
MountingHole
J2
Conn_01x18
BOOT0_PRE
PB7
PB6
PB5
PB4
PB3
PA15
PA12
PA11
PA8
J3
Conn_01x18
MCU_RST
SWCLK
SWDIO
PF3
PA0
PA1
PA2
PA3
PA4
PA5
PA6
PA7
PB0
PB1
Headers
OSCIN
OSCOUT
Y1
24MHz
C6
22pf
C7
22pf
OSC32OUT
OSC32IN
C8
12.5pf
Y2
32.768KHz
C9
12.5pf
Crystals
C5
0.1uf
U2
PY32F030K1xT
VCC
OSCIN-PF0
OSCOUT-PF1
PF2-NRST
PF3
PF4-BOOT0
PB0
PB1
PB3
PB4
PB5
PB6
PB7
PA15
PA14
PA13
PA12
PA11
PA10-OSC32IN
PA9-OSC32OUT
PA8
PA7
PA6
PA5
PA4
PA3
PA2
PA1
PA0
VSS
PY32F030K18T6
Flash 64k
Ram 8k
MCU
Wurth 434133025816
SW1
Usr
R4
1.5K
User Push Button
JP5
Boot
R7
10K
Boot Selection
R6
680
D2
GREEN
User LED
R5
10K
SW2
Reset
C11
0.1uf
Reset
bit-builder.com
Sheet: /
File: py32_dev.kicad_sch
Title: py32_dev
Size: A
Date:
Rev: A
KiCad E.D.A. kicad 6.0.11-2627ca5db0~126~ubuntu22.04.1
Id: 1/1