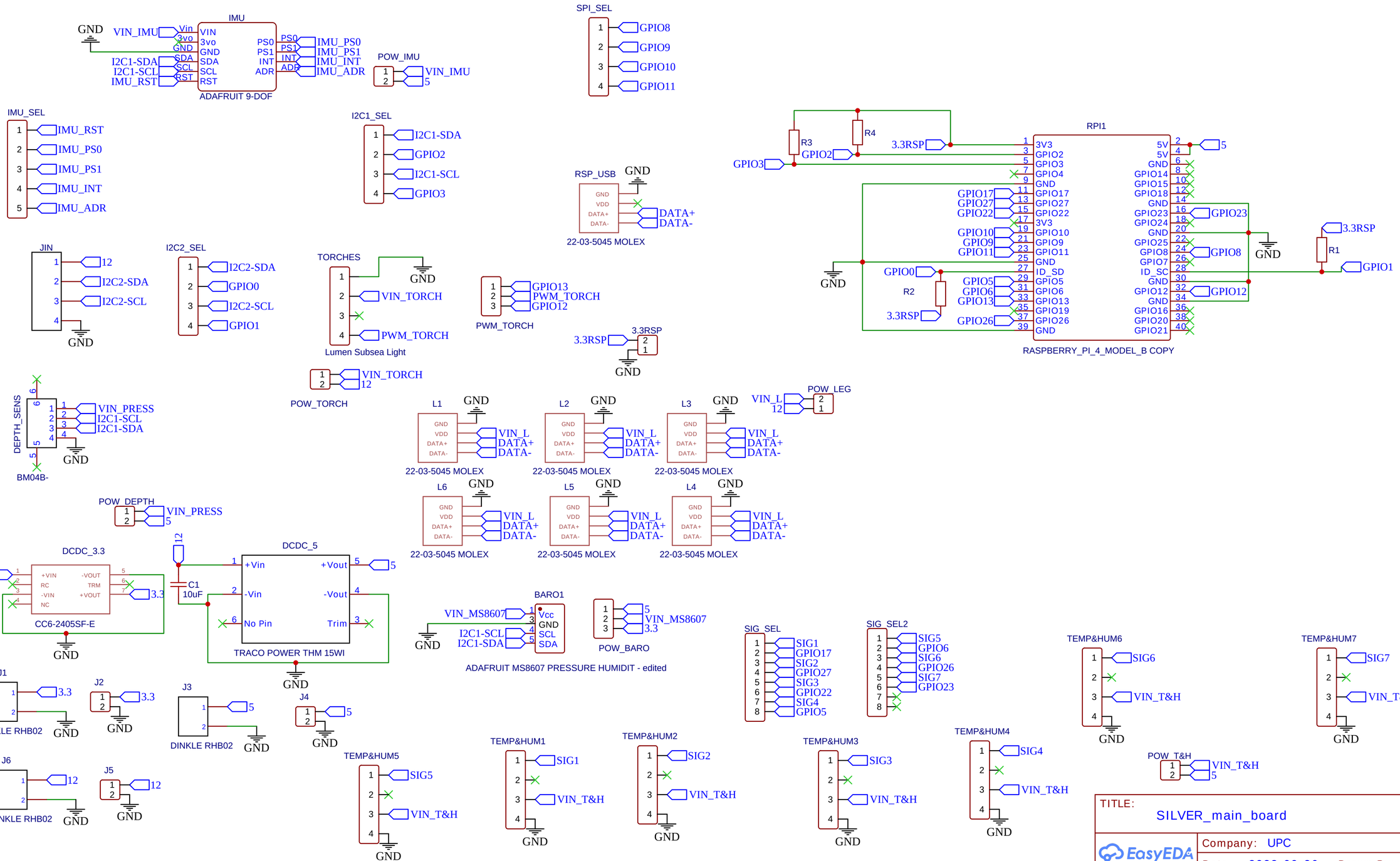

TITLE: SILVER_main_board	REV: 1.0
Company: UPC	Sheet: 1/1
Date: 2023-09-26	Drawn By: Matias Carandell