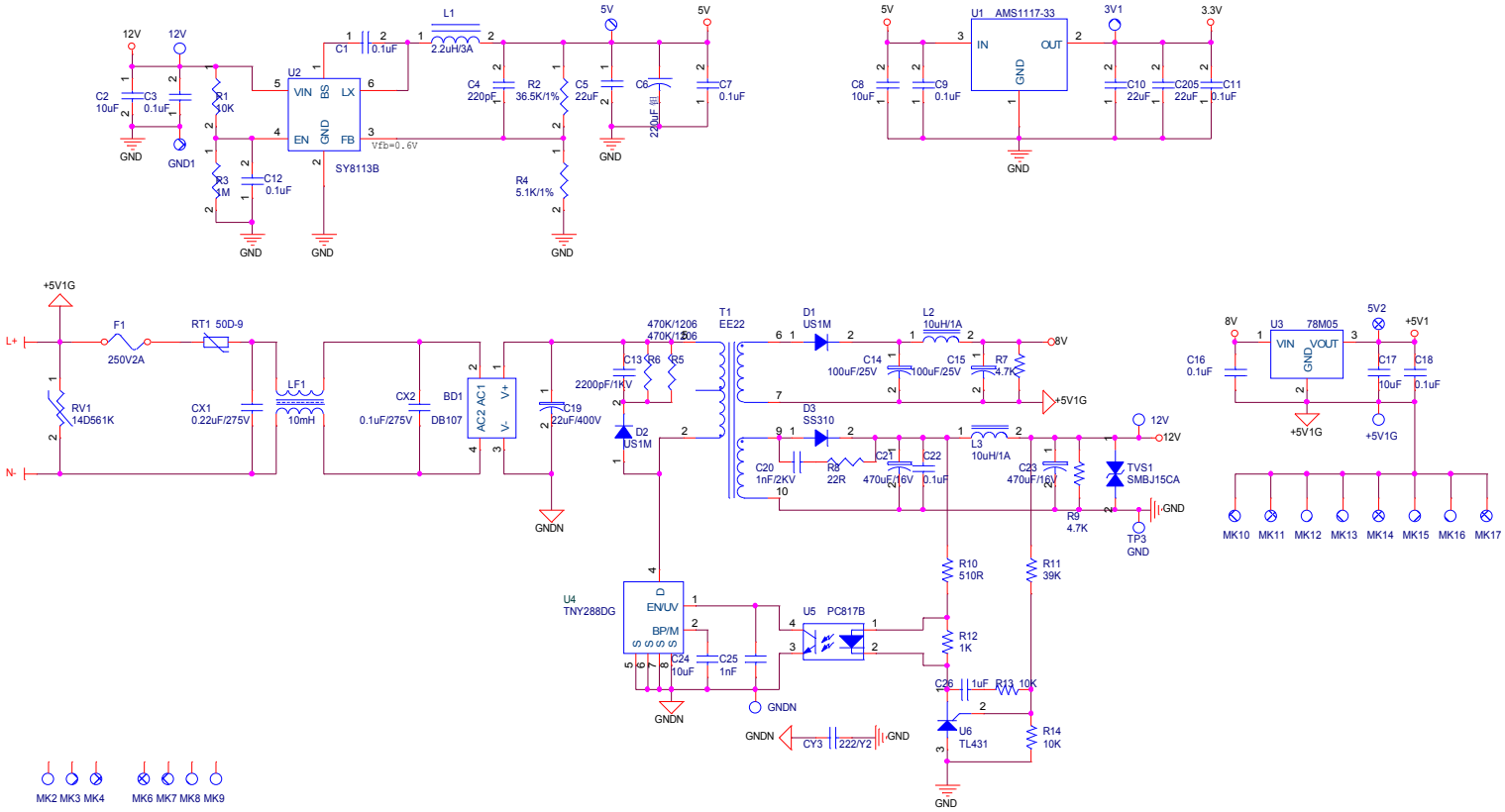

Title <Title>		
Size B	Document Number <Doc>	Rev <RevCode>
Date: Thursday, December 28, 2017	Sheet 2 of 6	

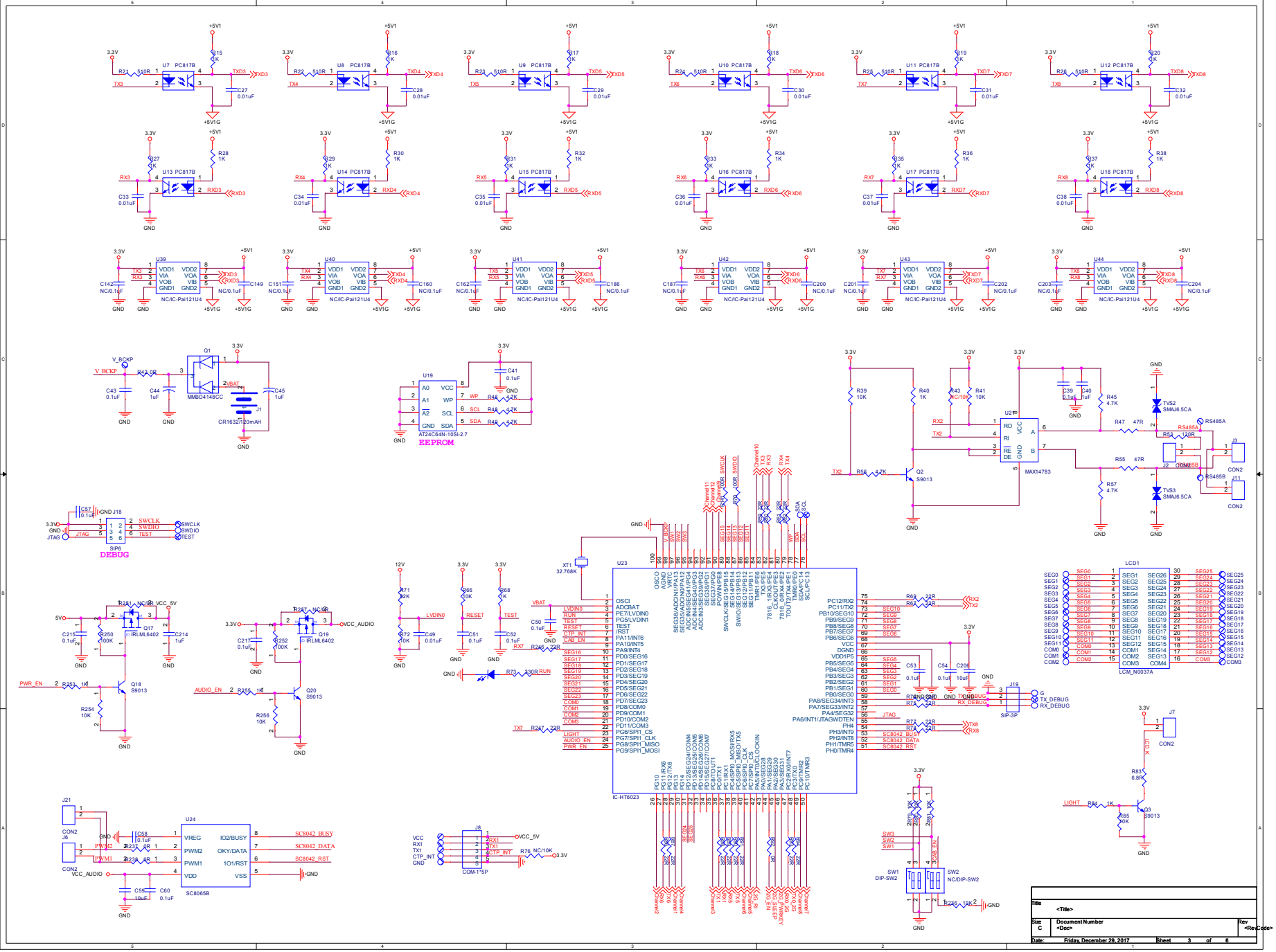

Title	<Title>	
Size C	Document Number <Doc>	Rev <RevCode>
Date: Friday, December 29, 2017	Sheet 3 of 6	

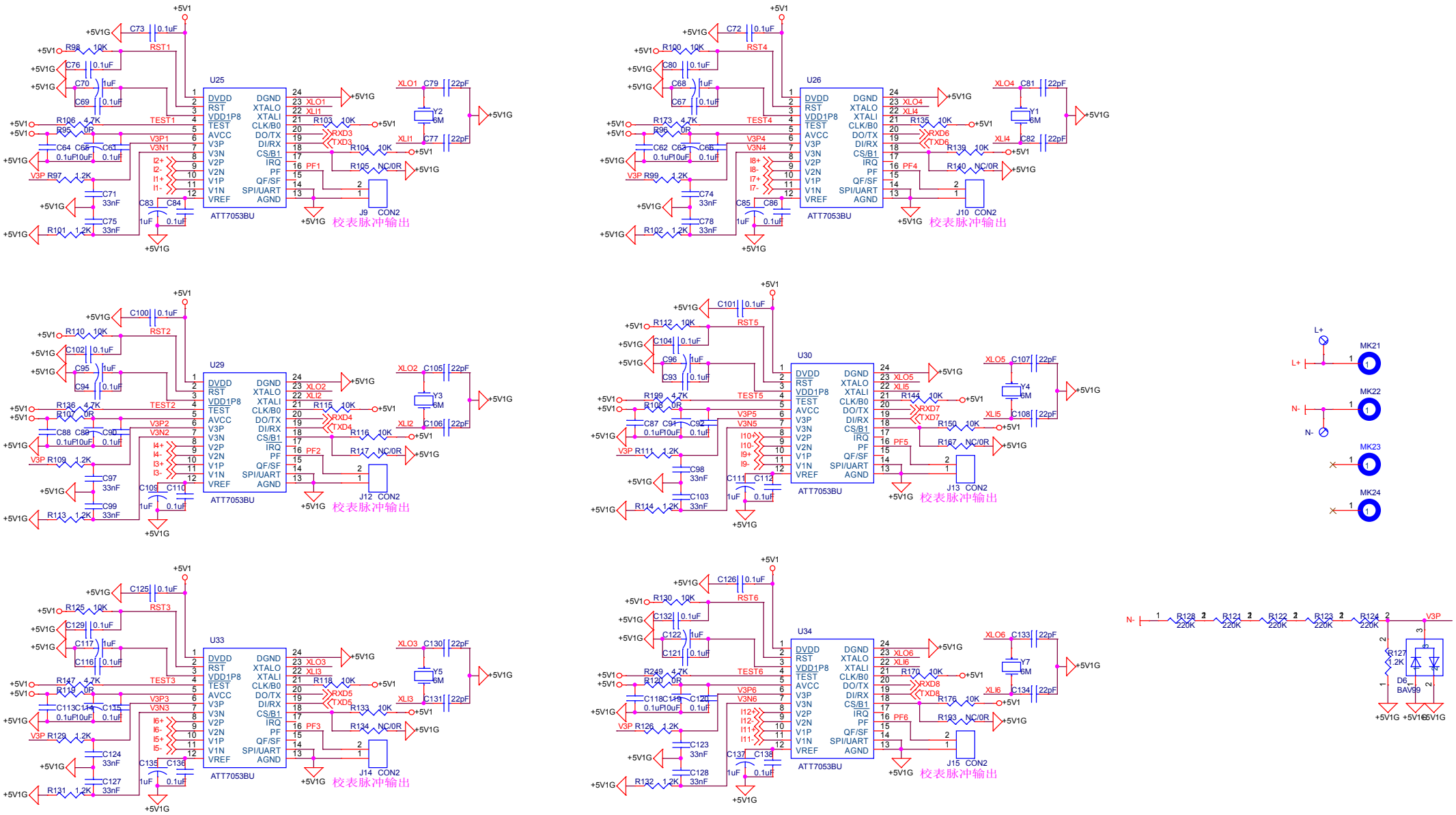

Title	<Title>	
Size A3	Document Number <Doc>	Rev <RevCode>
Date: Wednesday, December 27, 2017	Sheet 4 of 6	

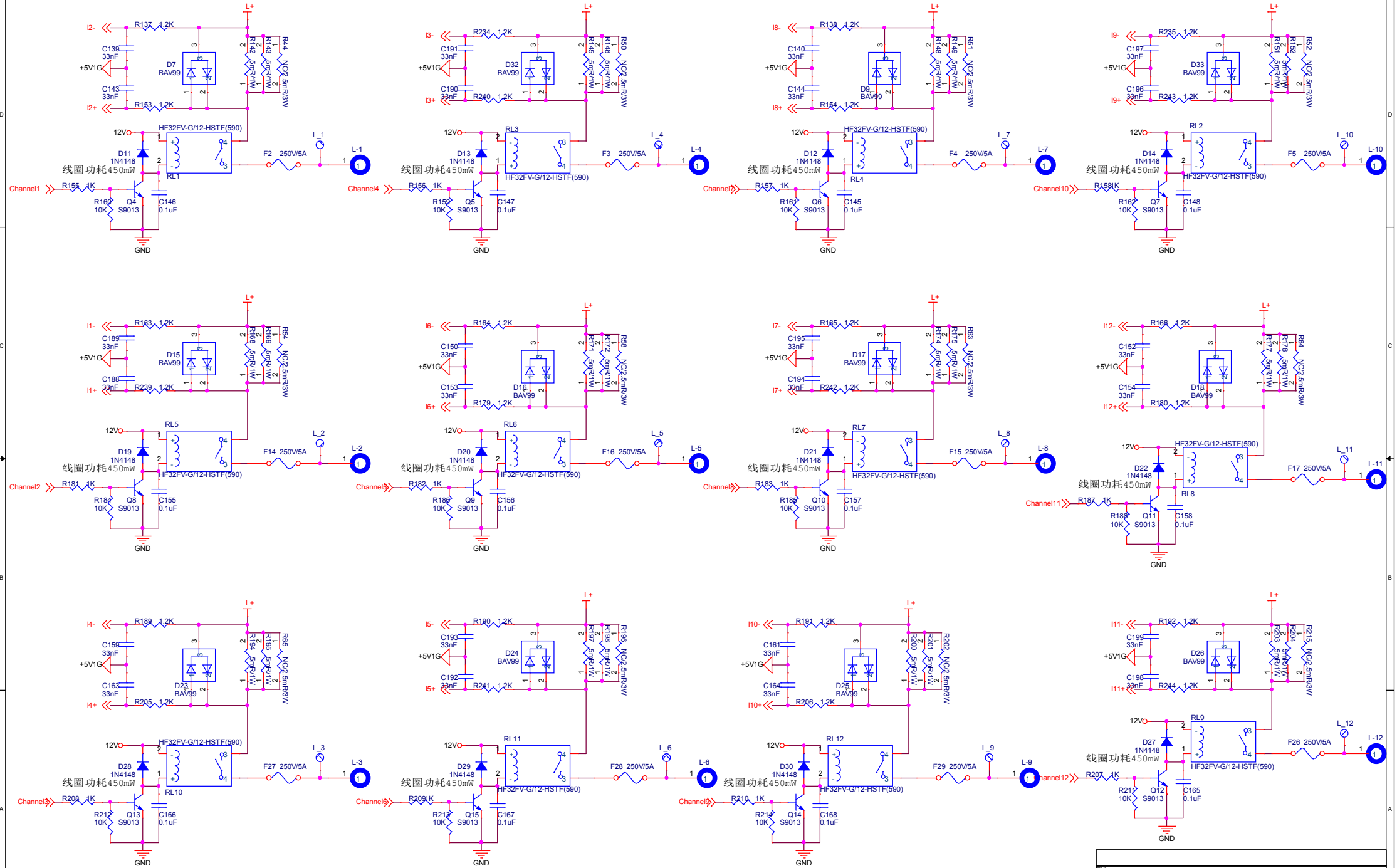

Title	<Title>	
Size Custom	Document Number <Doc>	Rev <RevCode>
Date: Thursday, December 28, 2017	Sheet 5 of 6	

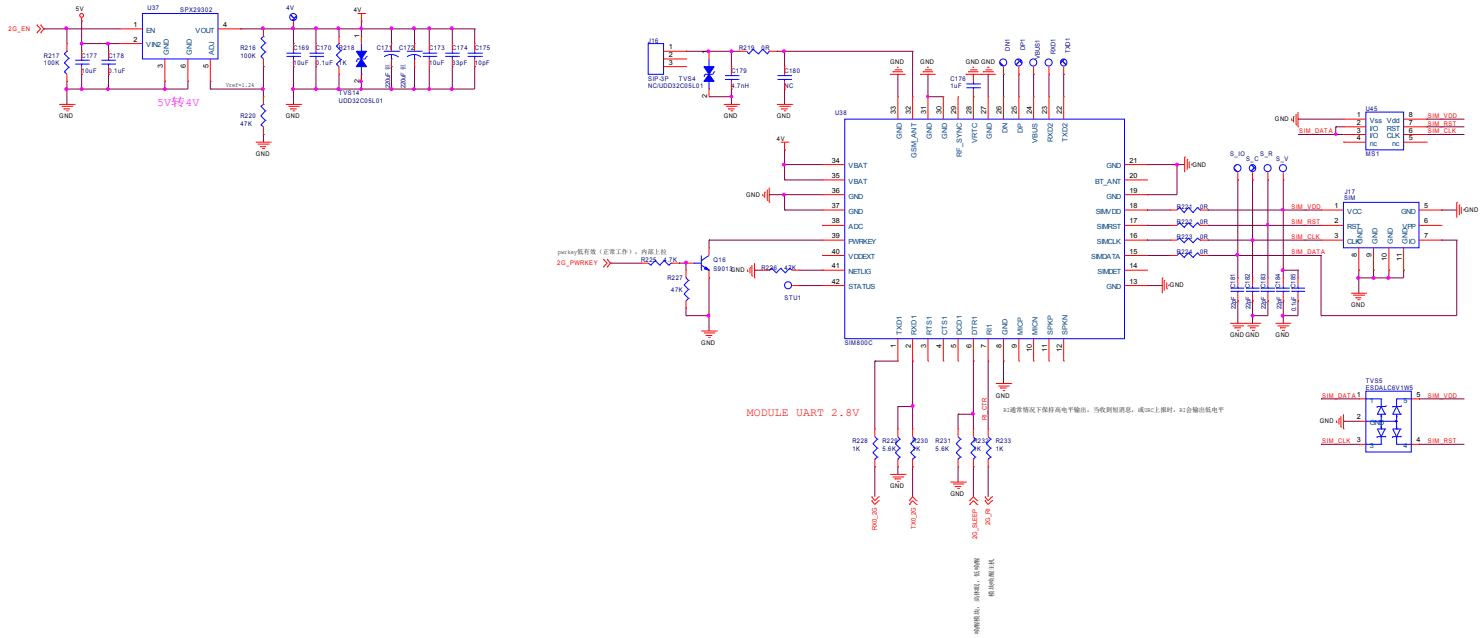

Title	<Title>		
Size A4	Document Number <Doc>		Rev <Rev
Date: Friday, December 29, 2017		Sheet 6 of 6	