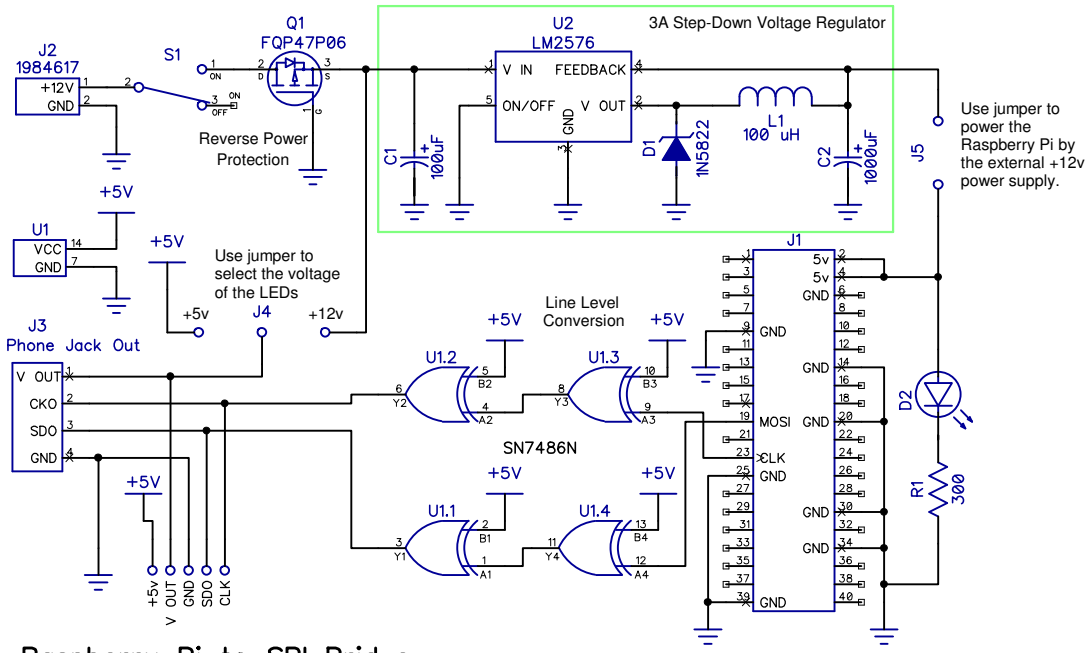

Raspberry Pi to SPI Bridge
Published on http://github.com/graham-best/Raspberry-Pi-to-SPI-Bridge
Rev B