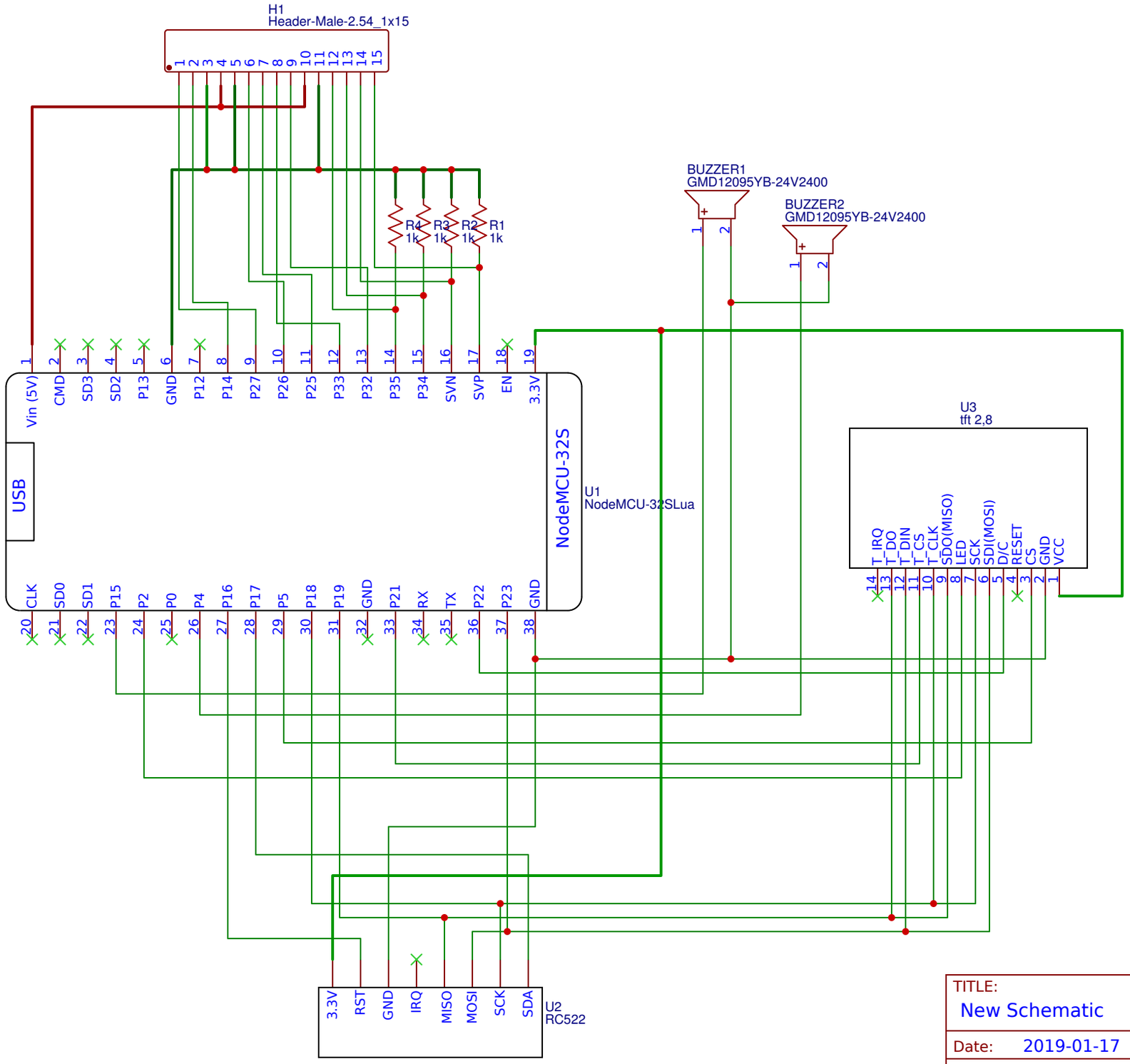

TITLE: New Schematic	REV: 1.0
Date: 2019-01-17	Sheet: 1/1
EasyEDA V5.8.22	Drawn By: grakgrak