SoM

Note:
Leave annotation
as P1, P2, P3, P4

EmCraft System on Module

NXP i.MX 8M Quad Applications Processor with DDR4 LPRAM and eMMC
Connectors: 4x dual row 80 pin 0.4mm pitch headers (P1..P4)

P1 IMX8M-SOM1 · P2 IMX8M-SOM2 · P3 IMX8M-SOM3 · P4 IMX8M-SOM4

MIPI → mipi.sch
Ethernet → ethernet.sch
WLAN+BT M.2 → wifi_bt_m2.sch
JTAG → jtag.sch
Sensors (IMU_INT, I2C3_SCL, I2C3_SDA, PROX_INT) → sensors.sch
HDMI → hdmi.sch
Boot Config → boot.sch
Audio → audio.sch
SPI Flash → flash.sch
WWAN mPCIe → wwan_mpcie.sch
USB Hub + SDIO Bridge → usb_hub_sdio.sch
Smart Card → smartcard.sch
uSD Card → sd.sch
USB-C → usb-c.sch
Battery → battery.sch
Power → power.sch
Buttons & LED → buttons_led.sch
UART Debug → uart.sch
GNSS → gnss.sch
Haptic Motor → haptic.sch
RTC → rtc.sch

Alternate Functions:
SAI6_TXD0
SAI6_TXFS/RXFS
SAI6_TXC/RXC
SAI6_RXD0

GPIO that can be swapped around:
GPIO1_IO05 (was CSI_P2_PWDN)
GPIO1_IO12 (was IR_CAP)
GPIO3_IO19 (was LED1)
GPIO3_IO20
GPIO3_IO25
GPIO5_IO03 (was PWM3)
GPIO5_IO04 (was PWM2)
GPIO5_IO05 (was PWM1)

3V3_OUT is sourced from PMIC's 3A NVCC_3P3/BUCK6 and is supplying the SoC's H7 ball "NVCC_I2C"

Purism_Logo
MOD101 EmC_SoM Daughterboard plugged into main PCB

Librem 5 Dev Kit	Purism
Copyright 2018 GNU GPLv3	
eric.kuzmenko@puri.sm	
angus.ainslie@puri.sm	
nicole.faerber@puri.sm	
christian.schilmoeller@puri.sm	
Sheet: /	
File: dvk-mx8m-bsb.sch	
Size: A3	Date: 2018-08-14
KiCad E.D.A. kicad 5.0.0	Rev: v0.1.0
	Id: 1/24

USB-C TCPC – Config Channel (CC) and PD Role Controller

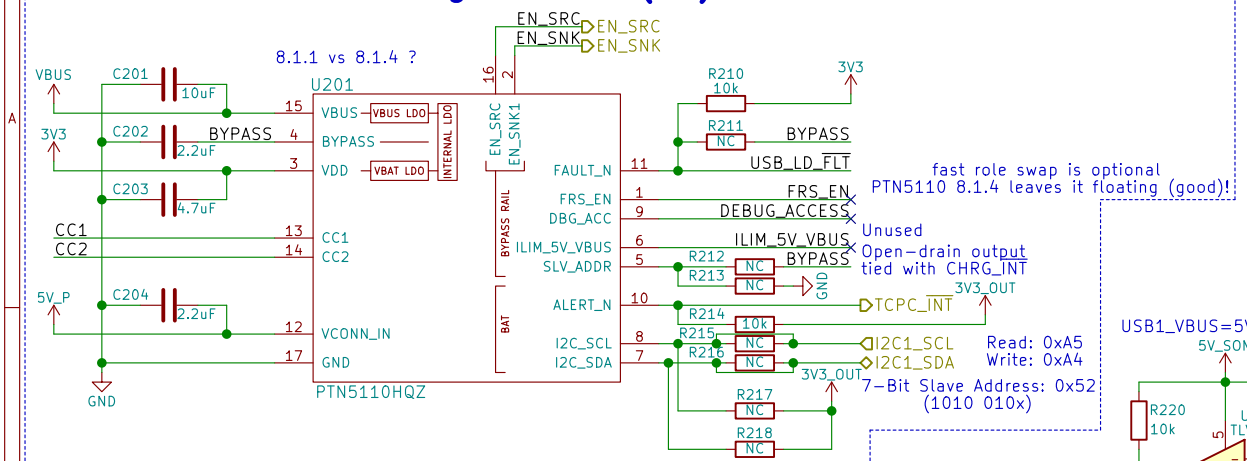

"Under dead battery operation, PTN5110 applies voltage clamps to both CC pins so that the system may receive power as a Sink. To support platforms with buck-boost configuration, PTN5110 asserts EN_SNK1 pin based on validity of VBUS voltage (facilitates 5 V VBUS sinking)."

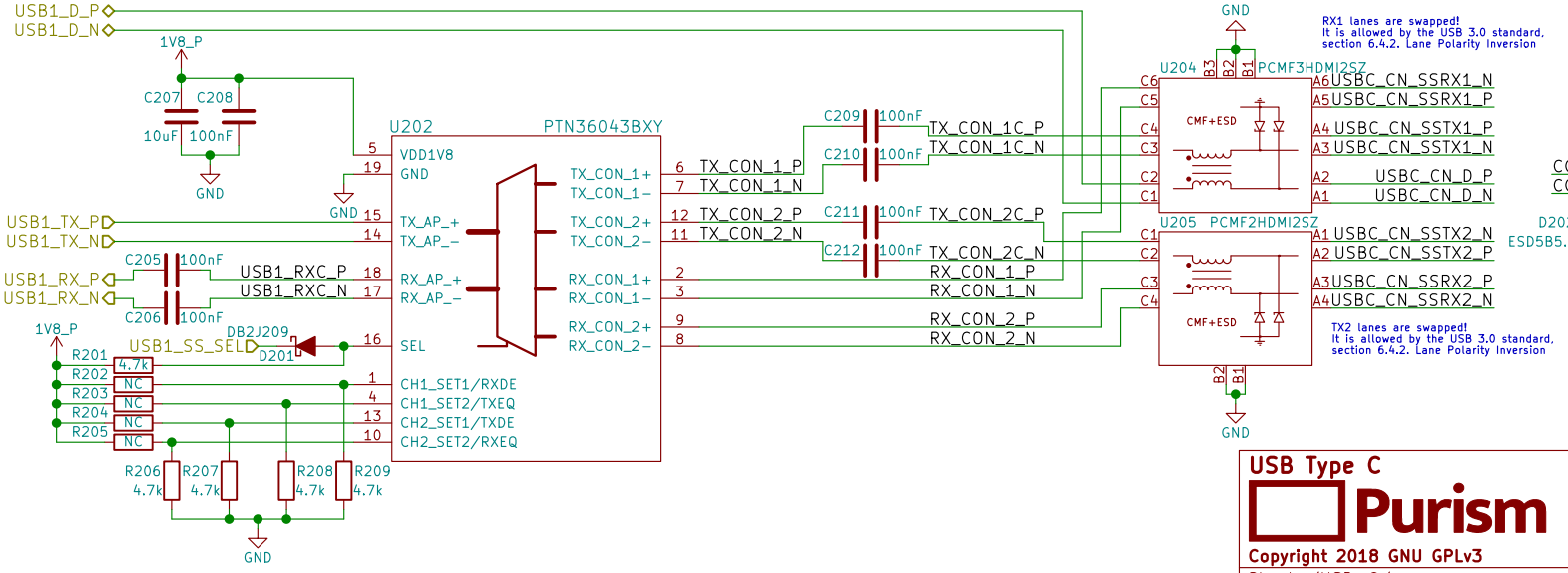

USB-C

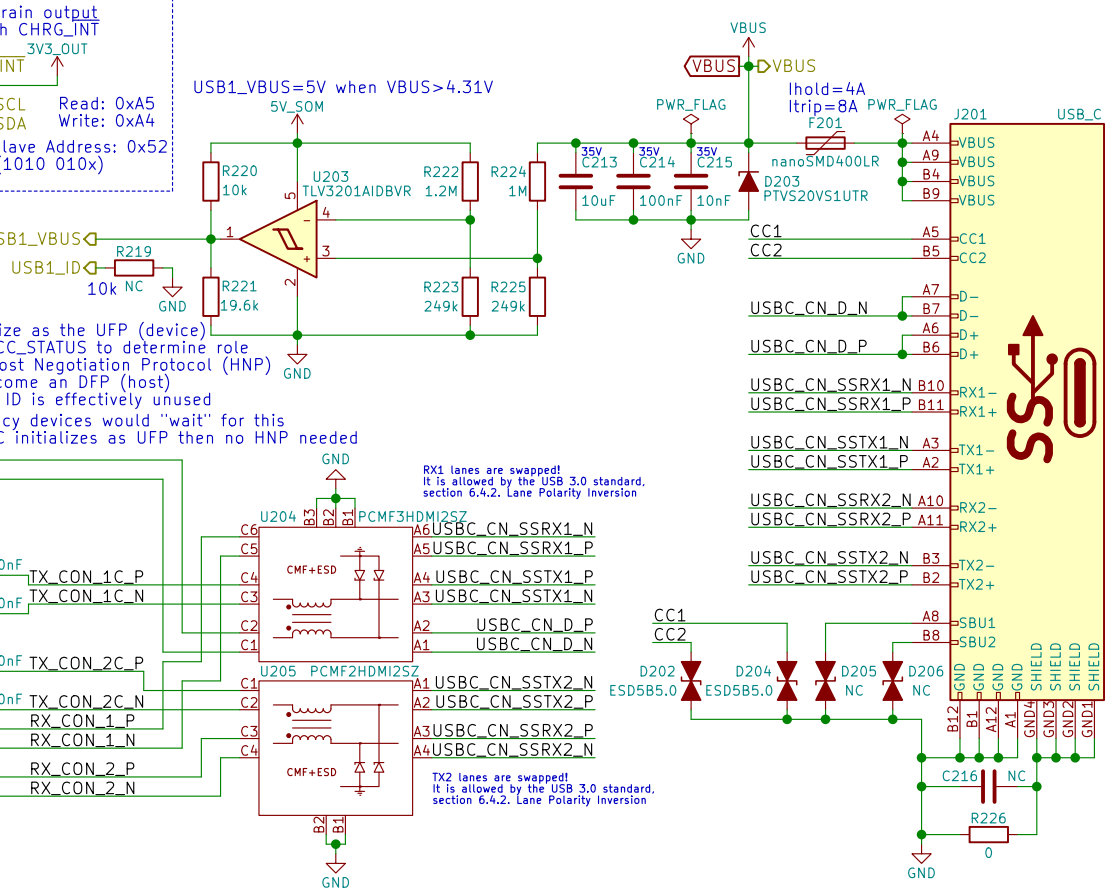

USB Type C

Purism

Copyright 2018 GNU GPLv3

eric.kuzmenko@puri.sm
angus.ainslie@puri.sm
nicole.faerber@puri.sm
christian.schilmoeller@puri.sm

Sheet: /USB-C/
File: usb-c.sch

Size: A4 | Date: 2018-07-17 | Rev: v0.1.0

KiCad E.D.A. kicad 5.0.0 | Id: 2/24

Battery Charge Controller

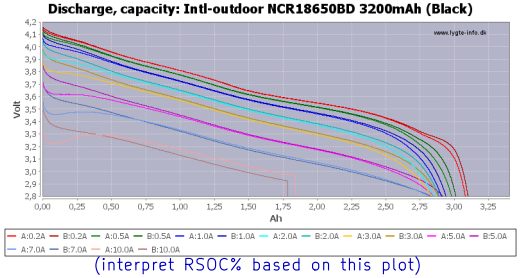

(interpret RSOC% based on this plot)

Drawing ~320mA,
or consuming ≤1.152W,
should give close to
10 hours going from
100% to 0% charge

use AUTO_DPDM_EN
to auto-detect IINLIM

1.658≤ILIM≤2.063
ILIM(nom)≅1.859A
3.9≤VIN≤6

7-bit Slave Address: 0x6B
(1101 011x)

U301 BQ25896

I(Lsat)=7A
L301
1uH

FB301
HI1206T500R

3.5~4.25V
PWR_FLAG

~110uF

JP301
NC

R309
NC

D304
GREEN

0.4mA~2.4mA

R310
1.5k

VBAT_REG

D303
ESD9X5.0

Vrwm(max)=5.0V
Vbr(min)=6.2V
Pd=150mW

Vf(max)=1.1V

D301
GREEN

D302
GREEN

R301
2.2k

R302
2.2k

Default LOW:
adapter source

R305
10k

R306
191

sink current ~5mA

Read: 0xD7
Write: 0xD6

R303
10k

R304
10k

I2C1_SDA
I2C1_SCL
CHRG_INT
EN_SRC

EN_SNK

Q301
FDV301N

This disables charging
but maybe not VBUS->VOUT
if PTN5110HQ's FAULT_STATUS[6]==1
(Force Off VBUS bit) then set EN_HiZ=1
EN_HiZ may be auto-set when in hiccup

Reading PTN5110HQ's CC_STATUS and POWER_STATUS
registers will tell TCPM (i.MX8M) when to set EN_HiZ

Also, reading PTN5110HQ's CC_STATUS and POWER_STATUS
registers will tell TCPM (i.MX8M) when to set OTG_CONFIG=1
(this will also happen when PTN5110HQ sets EN_SRC HIGH)

BC1.2 is not mandated by PD spec
ICO used to determine max current
Also negotiated from CC pins (I2C)

Ihold=3.5A
Itrip=6.3A
Ttrip(max)=5s@8A

nanoSMD350LR
F301

BT301
18650

R308
5.23k

RGEN

R307
30.1k

TH301
10k

ONOFF

VBAT(DPL)=2.15~2.5V

Proposed battery: NCR18650B

VBAT(ovp_default)=REG06[7:2]=4.208V (reduce to 4.192V [010110])
Worst Case:
VBAT(default_max_ovp)=(REG06[7:2]×1.005)×1.04=4.3982016V
BQ29705 provides 4.425V as OVP!

ICHG(default)=REG[6:0]=2048mA (reduce to ~1.6A [0011001])

reference design: http://www.ti.com/lit/ug/sluuba2b/sluuba2b.pdf

may want to include BQ29705 protection as in:
http://www.ti.com/lit/ug/tiducl1/tiducl1.pdf
schematic: http://www.ti.com/lit/df/tidrp70/tidrp70.pdf
(PTC may be good enough)

Battery holder seems to fit up to ~68.88mm long batteries
need to test 18650 protected cells which are ~69.35mm long

Battery
Purism
Copyright 2018 GNU GPLv3

eric.kuzmenko@puri.sm
angus.ainslie@puri.sm
nicole.faerber@puri.sm
christian.schilmoeller@puri.sm

Sheet: /Battery/
File: battery.sch

Size: A4 | Date: 2018-07-17 | Rev: v0.1.0
KiCad E.D.A. kicad 5.0.0 | Id: 3/24

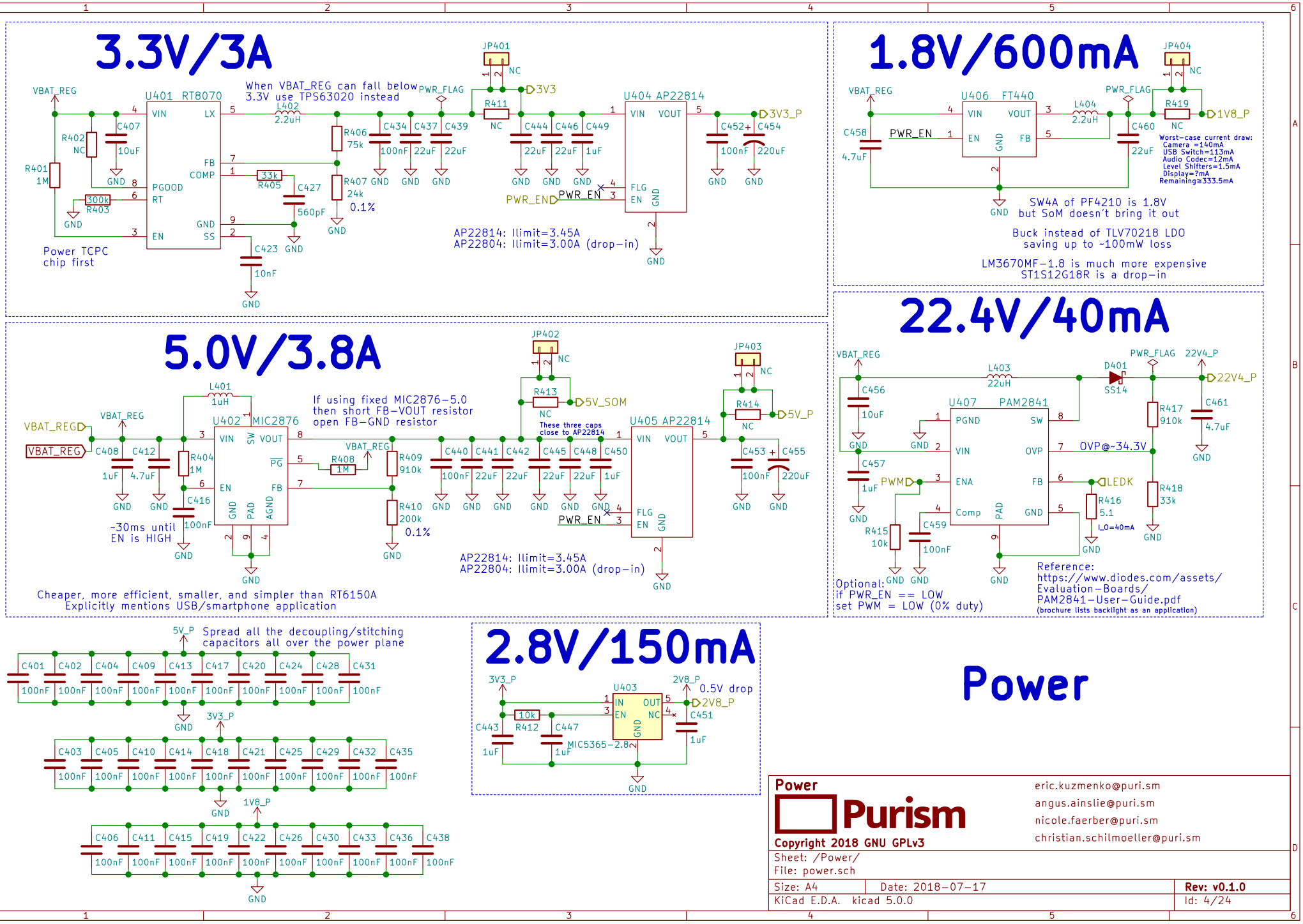
3.3V/3A
When VBAT_REG can fall below 3.3V use TPS63020 instead
U401 RT8070
Power TCPC chip first
AP22814: Ilimit=3.45A
AP22804: Ilimit=3.00A (drop-in)
1.8V/600mA
U406 FT440
SW4A of PF4210 is 1.8V but SoM doesn't bring it out
Buck instead of TLV70218 LDO saving up to ~100mW loss
LM3670MF-1.8 is much more expensive
ST1S12G18R is a drop-in
Worst-case current draw:
Camera =140mA
USB Switch=113mA
Audio Codec=12mA
Level Shifters=1.5mA
Display=?mA
Remaining≅333.5mA
5.0V/3.8A
U402 MIC2876
If using fixed MIC2876-5.0 then short FB-VOUT resistor open FB-GND resistor
~30ms until EN is HIGH
Cheaper, more efficient, smaller, and simpler than RT6150A
Explicitly mentions USB/smartphone application
22.4V/40mA
U407 PAM2841
OVP@~34.3V
Optional: if PWR_EN == LOW set PWM = LOW (0% duty)
Reference: https://www.diodes.com/assets/Evaluation-Boards/PAM2841-User-Guide.pdf
(brochure lists backlight as an application)
Spread all the decoupling/stitching capacitors all over the power plane
2.8V/150mA
U403
0.5V drop
Power
Purism
Copyright 2018 GNU GPLv3
eric.kuzmenko@puri.sm
angus.ainslie@puri.sm
nicole.faerber@puri.sm
christian.schilmoeller@puri.sm
Sheet: /Power/
File: power.sch
Size: A4
Date: 2018-07-17
Rev: v0.1.0
KiCad E.D.A. kicad 5.0.0
Id: 4/24

Boot Config

Only eMMC

BOOT_CFG[14:12]	Boot device
001	SD/eSD
010	MMC/eMMC
011	NAND

Fuse	Config	Definition	GPIO[1]	Shipped value	Settings
BOOT_CFG[11:10]	OEM	USDHC port selection	Yes	00	00 - USDHC-1 01 - USDHC-2 10 - USDHC-3 else - reserved

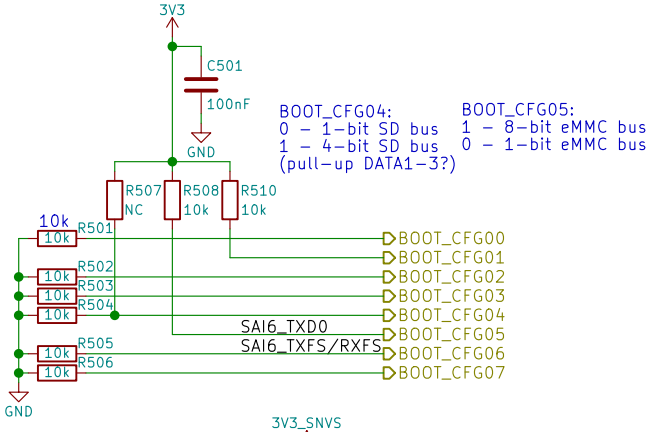

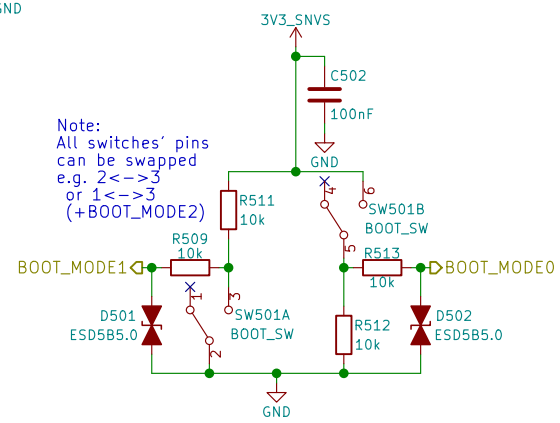

2–>1: eMMC
2–>3: USB (Serial Downloader)

BOOT_MODE[1:0]	Boot Type
00	Boot From Fuses
01	Serial Downloader
10	Internal Boot
11	Reserved

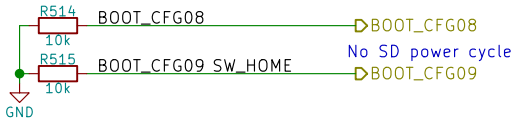

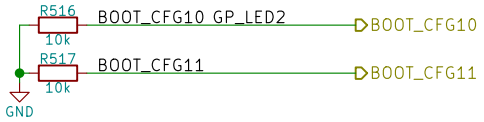

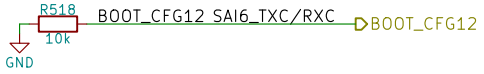

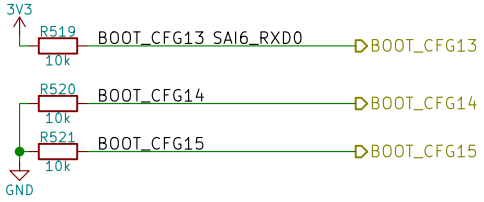

Boot Configuration

Purism

Copyright 2018 GNU GPLv3

eric.kuzmenko@puri.sm
angus.ainslie@puri.sm
nicole.faerber@puri.sm
christian.schilmoeller@puri.sm

Sheet: /Boot Config/
File: boot.sch

Size: A4 | Date: 2018–07–17 | **Rev: v0.1.0**
KiCad E.D.A. kicad 5.0.0 | Id: 5/24

Real-Time Clock

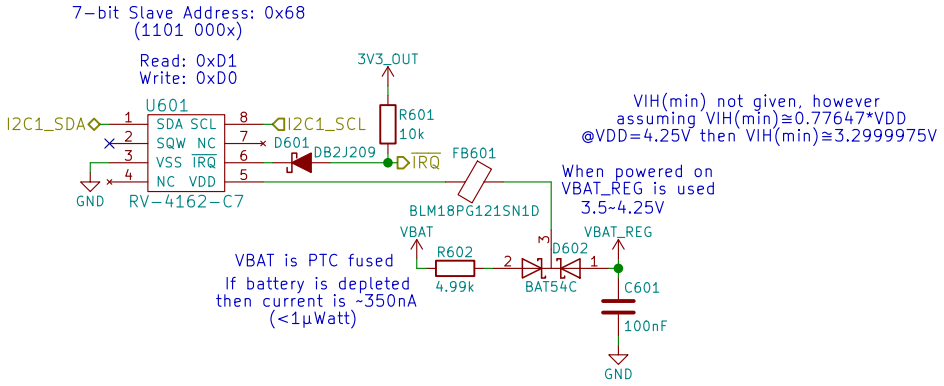

Note:
Datasheet says slave address is 0xD0
with a R/W bit appended, since 0xD must
be 4-bits wide the actual 7-bit address is
0x68 (110 1000), and becomes 0xD0 during a
write operation (1101 0000)

Reference:
https://github.com/HIO-Project/linux-imx6-nano-imx_3.10.17_1.0.1_ga/
blob/8848e94b2f889fe44f6736e2d4c98851a2282275/arch/arm/boot/dts/
imx6qdl-mtp.dtsi#L351

RTC

Purism

Copyright 2018 GNU GPLv3

eric.kuzmenko@puri.sm
angus.ainslie@puri.sm
nicole.faerber@puri.sm
christian.schilmoeller@puri.sm

Sheet: /RTC/
File: rtc.sch

Size: A4 | Date: 2018-07-17 | **Rev: v0.1.0**
KiCad E.D.A. kicad 5.0.0 | Id: 6/24

UART Debug

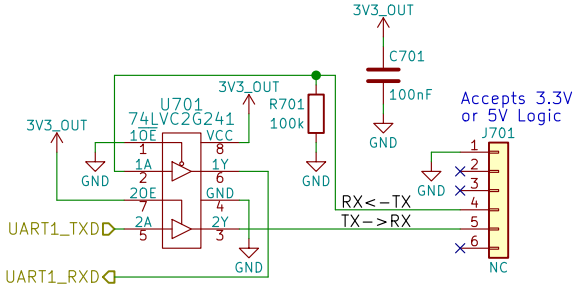

UART Debug

Purism

eric.kuzmenko@puri.sm
angus.ainslie@puri.sm
nicole.faerber@puri.sm
christian.schilmoeller@puri.sm

Copyright 2018 GNU GPLv3

Sheet: /UART Debug/
File: uart.sch

Size: A4	Date: 2018-07-17	**Rev: v0.1.0**
KiCad E.D.A. kicad 5.0.0		Id: 7/24

JTAG

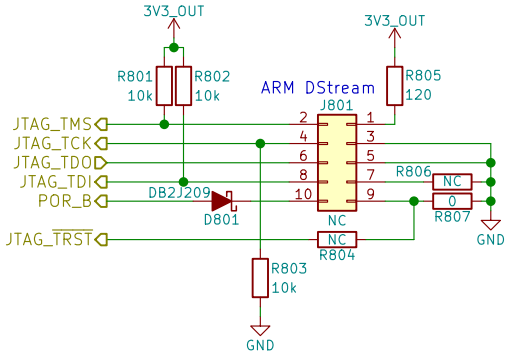

eric.kuzmenko@puri.sm
angus.ainslie@puri.sm
nicole.faerber@puri.sm
christian.schilmoeller@puri.sm

Copyright 2018 GNU GPLv3

JTAG		
Purism		
Sheet: /JTAG/		
File: jtag.sch		
Size: A4	Date: 2018-07-17	Rev: v0.1.0
KiCad E.D.A. kicad 5.0.0		Id: 8/24

USB Hub + SDIO Bridge

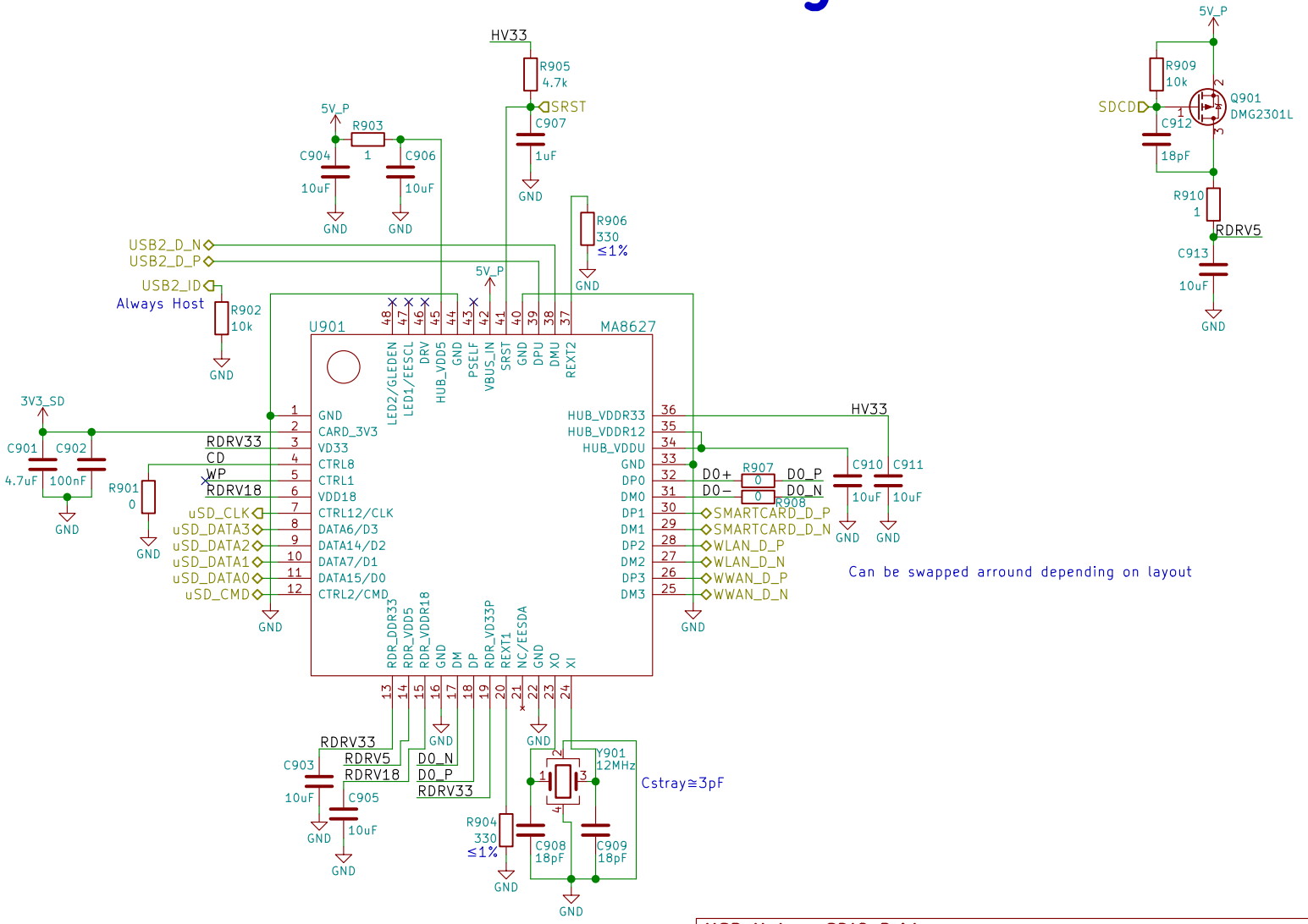

USB Hub + SDIO Bridge

Purism

eric.kuzmenko@puri.sm
angus.ainslie@puri.sm
nicole.faerber@puri.sm
christian.schilmoeller@puri.sm

Copyright 2018 GNU GPLv3

Sheet: /USB Hub + SDIO Bridge/
File: usb_hub_sdio.sch

Size: A4	Date: 2018-07-17	Rev: v0.1.0
KiCad E.D.A. kicad 5.0.0		Id: 9/24

µSD

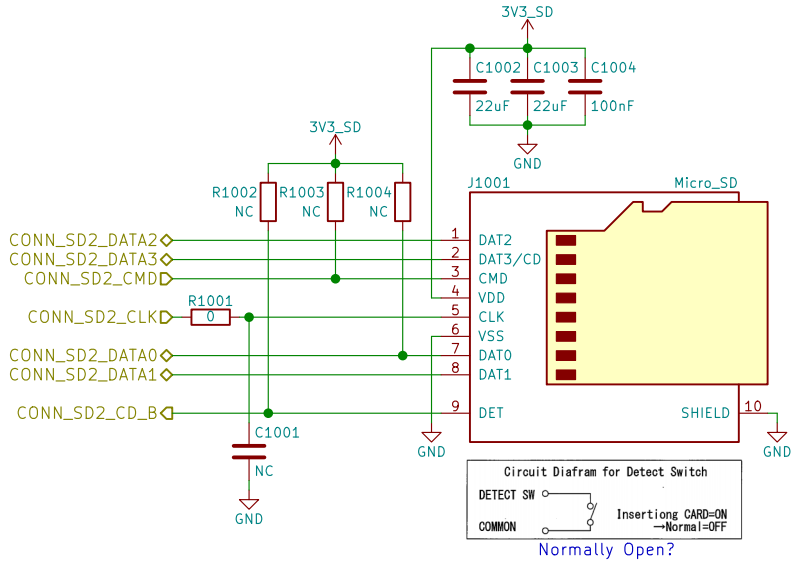

Normally Open?

uSD Card		eric.kuzmenko@puri.sm angus.ainslie@puri.sm nicole.faerber@puri.sm christian.schilmoeller@puri.sm
Purism		
Copyright 2018 GNU GPLv3		
Sheet: /uSD Card/ File: sd.sch		
Size: A4	Date: 2018-07-17	**Rev: v0.1.0**
KiCad E.D.A. kicad 5.0.0		Id: 10/24

MIPI

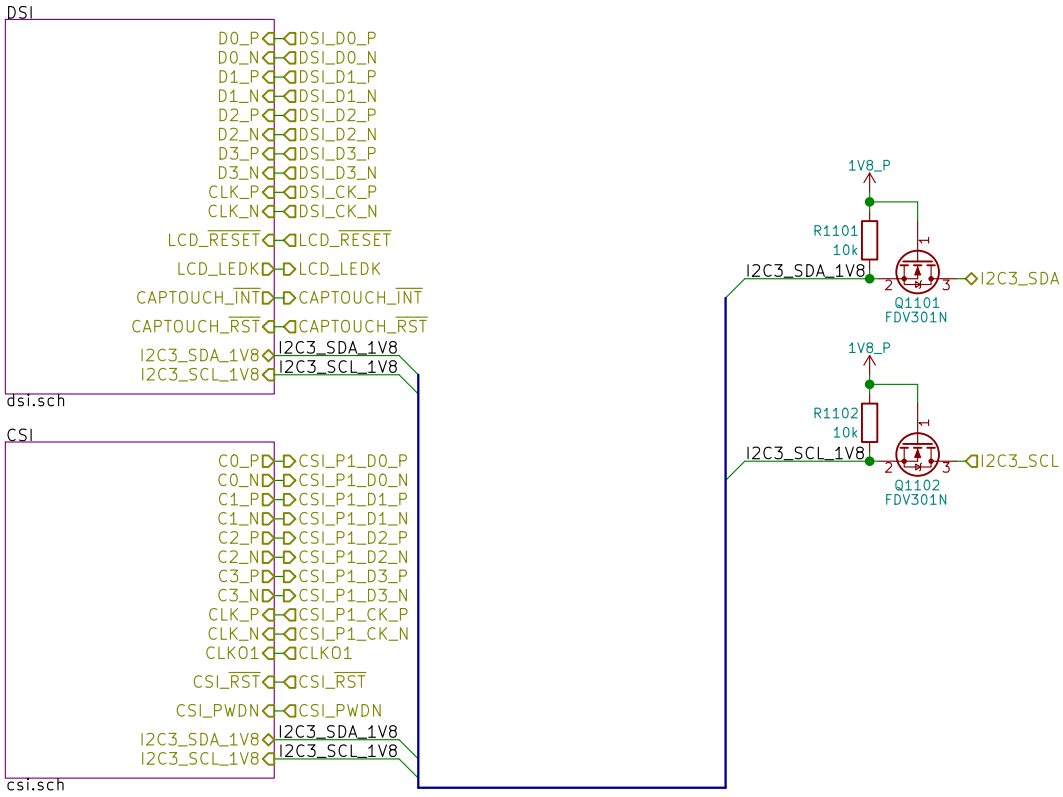

MIPI

Purism

Copyright 2018 GNU GPLv3

eric.kuzmenko@puri.sm
angus.ainslie@puri.sm
nicole.faerber@puri.sm
christian.schilmoeller@puri.sm

Sheet: /MIPI/
File: mipi.sch

Size: A4 | Date: 2018-07-17 | **Rev: v0.1.0**
KiCad E.D.A. kicad 5.0.0 | Id: 11/24

Display & Touch Controller

LCD PN:
Shenzhen Jinghong Electronics Co., Ltd.
JH057N00900

Note:
No power-up sequence is given in the spec sheet

7-bit Slave Address: 0x5D
(1011 101x)

Read: 0xBB
Write: 0xBA

Cap-Touch Controller IC PN:
Goodix GT5688

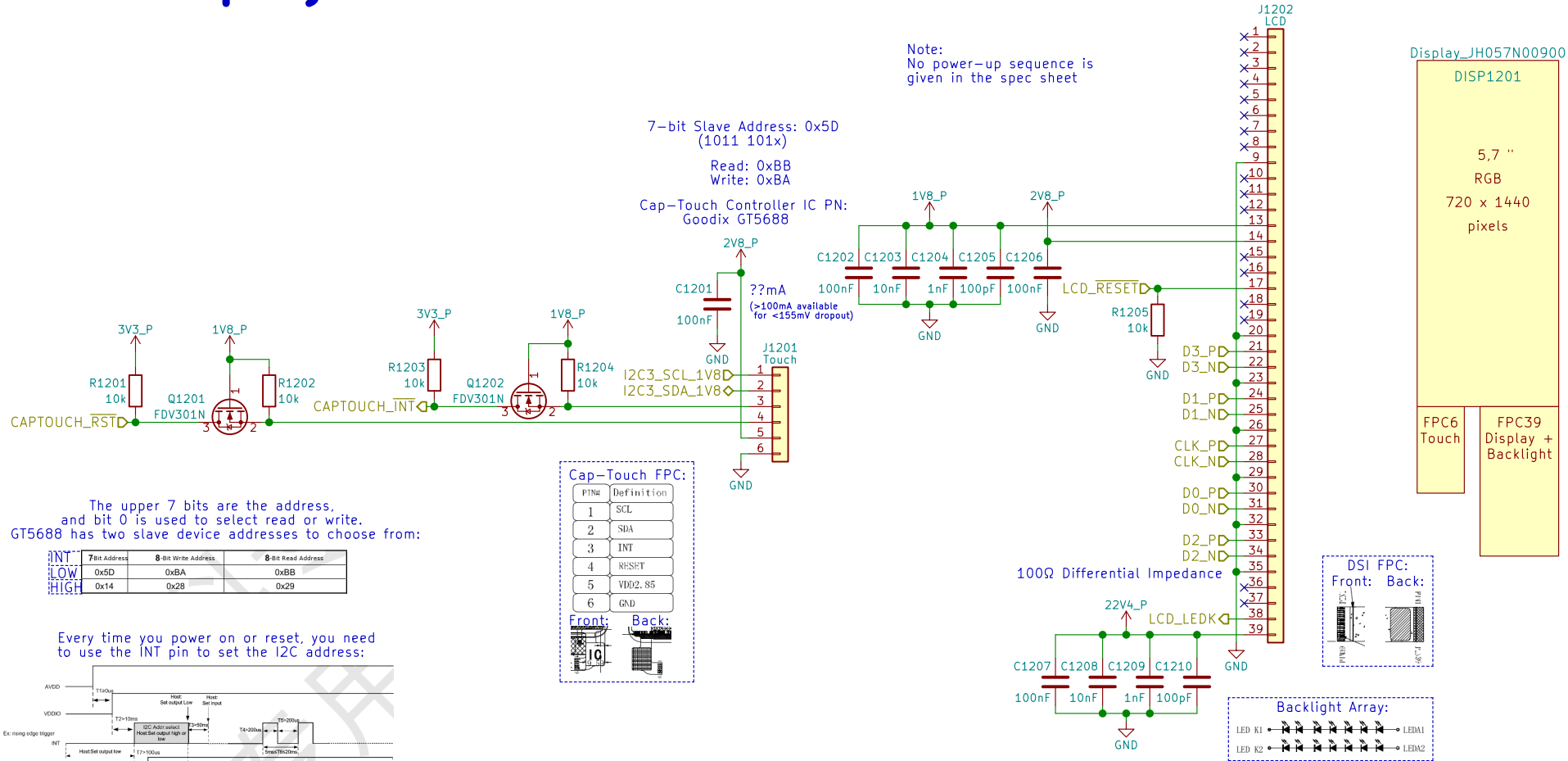

Display_JH057N00900

DISP1201

5,7 "
RGB
720 x 1440
pixels

FPC6
Touch

FPC39
Display + Backlight

Cap-Touch FPC:

PIN#	Definition
1	SCL
2	SDA
3	INT
4	RESET
5	VDD2.85
6	GND

Front: Back:

DSI FPC:
Front: Back:

Backlight Array:

The upper 7 bits are the address,
and bit 0 is used to select read or write.
GT5688 has two slave device addresses to choose from:

INT	7-Bit Address	8-Bit Write Address	8-Bit Read Address
LOW	0x5D	0xBA	0xBB
HIGH	0x14	0x28	0x29

Every time you power on or reset, you need to use the INT pin to set the I2C address:

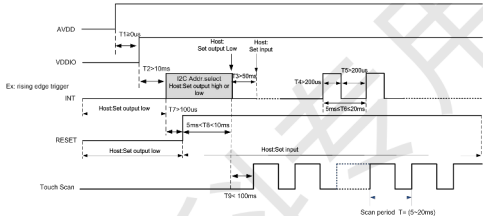

MIPI DSI

Purism

Copyright 2018 GNU GPLv3

eric.kuzmenko@puri.sm
angus.ainslie@puri.sm
nicole.faerber@puri.sm
christian.schilmoeller@puri.sm

Sheet: /MIPI/DSI/
File: dsi.sch

Size: A4 | Date: 2018-07-17 | **Rev: v0.1.0**
KiCad E.D.A. kicad 5.0.0 | Id: 12/24

Camera

Using Internal DVDD 1.5V Regulator:

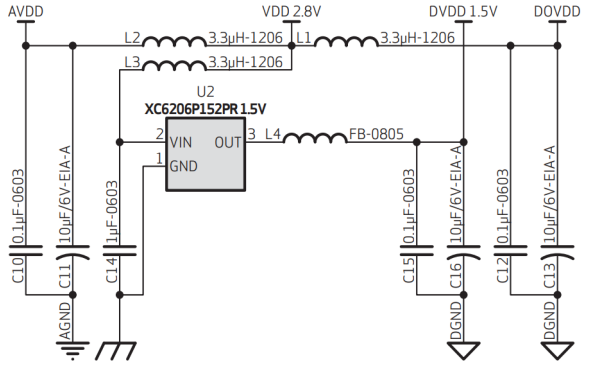

2.7 POWER UP SEQUENCE

Based on the system power configuration (1.8V or 2.8V for I/O power, using external DVDD or internal DVDD, requiring access to the I2C during power up period or not), the power up sequence will differ. If 1.8V is used for I/O power, using the internal DVDD is preferred. If 2.8V is used for I/O power, due to a high voltage drop at the internal DVDD regulator, there is a potential heat issue. Hence, for a 2.8V power system, OmniVision recommends using an external DVDD source. Due to the higher power down current when using an external DVDD source, OmniVision strongly recommends cutting off all powers, including the external DVDD, when the sensor is not in use in the case of 2.8V I/O and external DVDD.

2.7.1 POWER UP WITH INTERNAL DVDD

For powering up with the internal DVDD and I2C access during the power ON period, the following conditions must occur:

1. when DOVDD and AVDD are turned ON, make sure DOVDD becomes stable before AVDD becomes stable
2. PWDN is active high with an asynchronized design (does not need clock)
3. PWDN pin tied to digital ground if it is not controlled.
4. if PWDN pin is controlled as below, for PWDN to go low, power must first become stable (AVDD to PWDN ≥ 5 ms)
5. RESETB is active low with an asynchronized design
6. master clock XVCLK should provide at least 1 ms before host accesses the sensor's registers
7. host can access I2C bus (if shared) during entire period. 20ms after RESETB goes high, host can access the sensor's registers to initialize sensor

figure 2-3 power up timing with internal DVDD

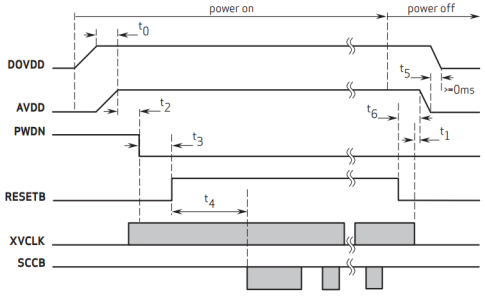

note t_0 ≥ 0ms, delay from DOVDD stable to AVDD stable, it is recommended to power up AVDD shortly after DOVDD has been powered up
t_1 ≥ 0ms, delay from XVCLK off to AVDD off
t_2 ≥ 5ms, delay from AVDD stable to sensor power up stable, PWDN can be pulled low after this point, XVCLK can be turned on after power on
t_3 ≥ 1ms, delay from sensor power up stable to RESETB pull up
t_4 ≥ 20ms, delay from RESETB pull high to SCCB initialization
t_5 ≥ 0ms, delay from AVDD off to DOVDD off
t_6 ≥ 0ms, delay from RESETB pull low to AVDD off

S640_DS_2_2

Note:
All switches' pins can be swapped
e.g. 2<->3
or 1<->3
(+mic)

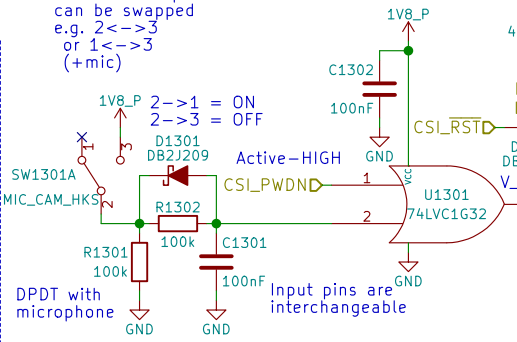

Camera PN:
Truly C08725-B5SA-E

7-bit Slave Address: 0x78
(1111 000x)

Read: 0xF1
Write 0xF0

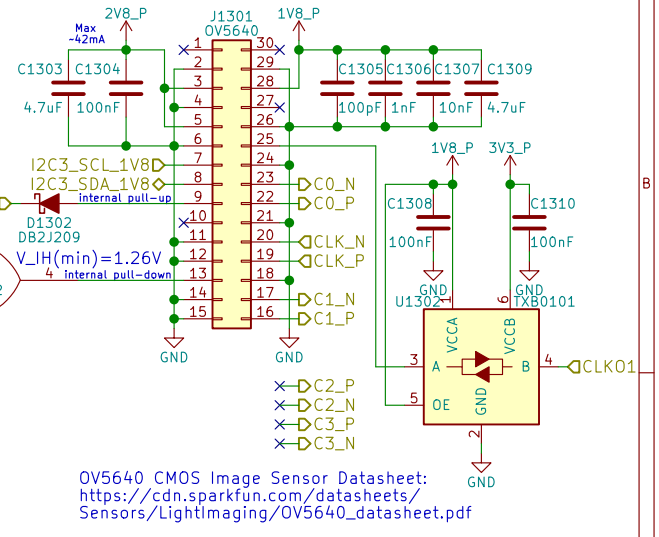

OV5640 CMOS Image Sensor Datasheet:
https://cdn.sparkfun.com/datasheets/Sensors/LightImaging/OV5640_datasheet.pdf

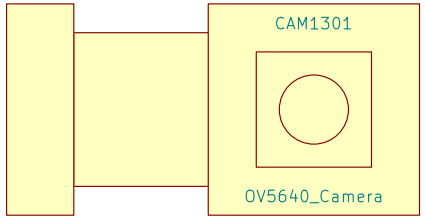

MIPI CSI

Purism

eric.kuzmenko@puri.sm
angus.ainslie@puri.sm
nicole.faerber@puri.sm
christian.schilmoeller@puri.sm

Copyright 2018 GNU GPLv3

Sheet: /MIPI/CSI/
File: csi.sch

Size: A4	Date: 2018-07-17	Rev: v0.1.0
KiCad E.D.A. kicad 5.0.0		Id: 13/24

Buttons & LED

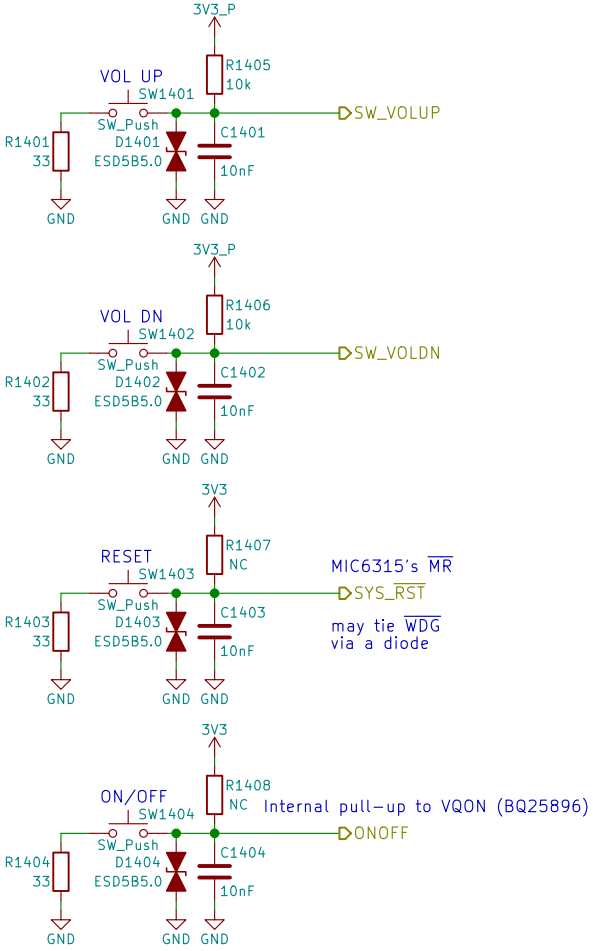

Use PWM2_PWMSAR to set the compare value (duty cycle)
Use PWM2_PWMCR[15:4] to set the PRESCALER (frequency)
Use PWM2_PWMPR to set the top of the counter (frequency)

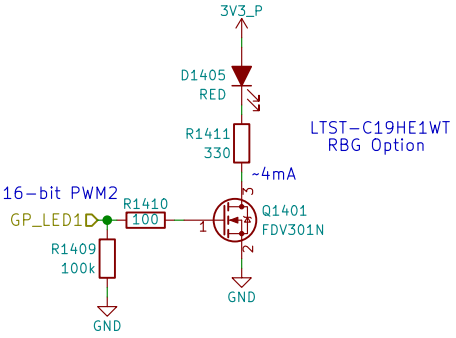

Buttons & LED	eric.kuzmenko@puri.sm angus.ainslie@puri.sm nicole.faerber@puri.sm christian.schilmoeller@puri.sm
Purism	
Copyright 2018 GNU GPLv3	
Sheet: /Buttons & LED/ File: buttons_led.sch	
Size: A4 | Date: 2018-07-17	**Rev: v0.1.0**
KiCad E.D.A. kicad 5.0.0	Id: 14/24

WWAN mPCIe

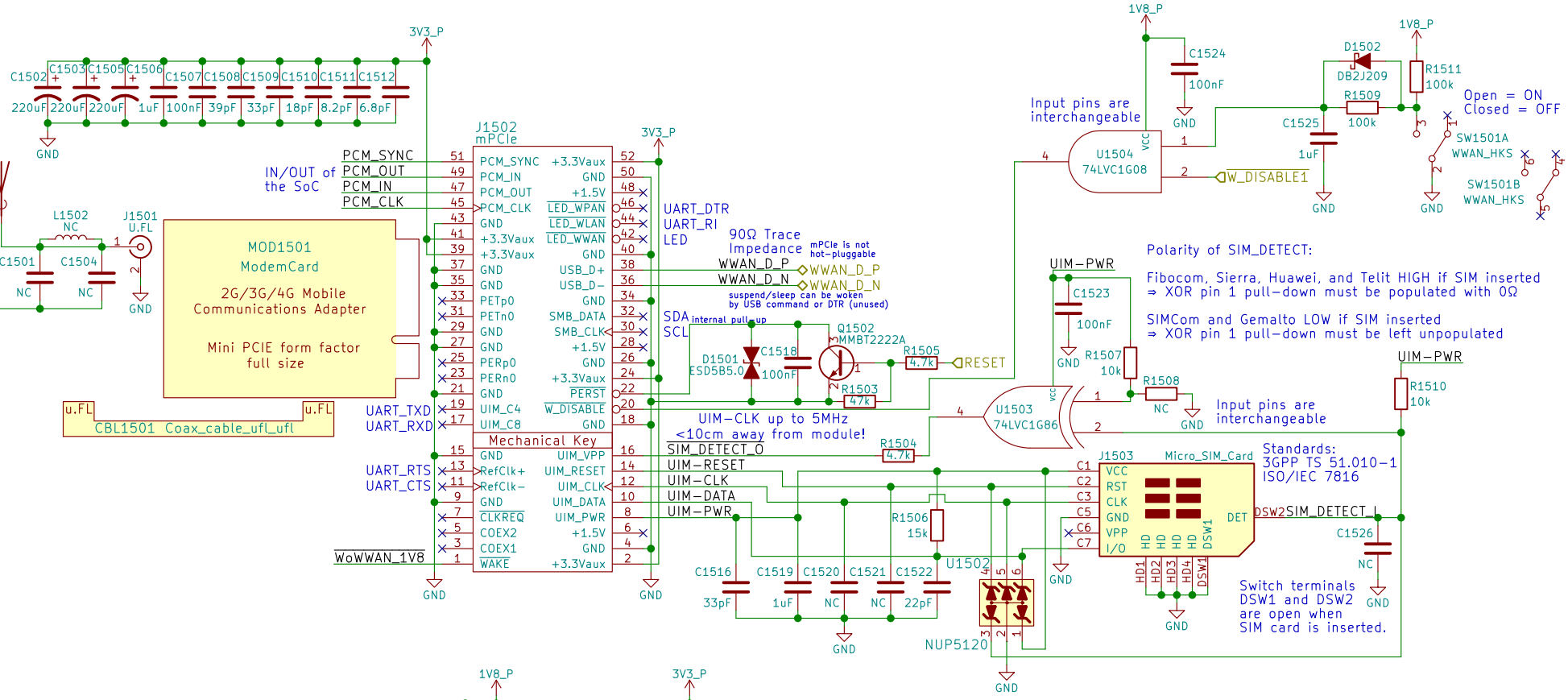

WWAN mPCIe	eric.kuzmenko@puri.sm
Purism	angus.ainslie@puri.sm
	nicole.faerber@puri.sm
	christian.schilmoeller@puri.sm

Copyright 2018 GNU GPLv3

Sheet: /WWAN mPCIe/		
File: wwan_mpcie.sch		
Size: A4	Date: 2018-07-17	Rev: v0.1.0
KiCad E.D.A. kicad 5.0.0		Id: 15/24

Audio

Reference:
http://www.52rd.com/S_txt/2011_3/TXT26685.htm
http://www.sengpielaudio.com/calculator-transferfactor.htm
https://electronics.stackexchange.com/questions/31442/how-can-i-switch-this-audio-jack-using-its-own-mechanical-switches-without-cre
(Nit6 does the same)
+Zener diode to protect against ranges outside of −0.9V to 3.3V

dB specs in datasheet is a unit of power gain (not dBu or VU)
with respect to the DAC's unattenuated output

"HP Output − 62.5mW max, 1.02kHz sine into 16Ω load at 3.3 V"
⇒ $(1V)^2/(16Ω)=62.5mW$
∴ Vrms=1V ⇒ Vp(amplitude)=1.414V
∴ Irms(max)=62.5mA

If HP_DET is HIGH for >100ms then HPs are present

S/E button on earbud headsets
shorts the mic for key function

Could use FSA8008 to detect mic

CTIA/AHJ

Microphone
Ground
Audio (Right)
Audio (Left)

7-bit Slave Address: 0x0A
(0001 010x)

Read: 0x15
Write: 0x14

Mute via
MUTE_LO=1

may use lineout left channel
for pseudo-earpiece speaker

Z(hp)≥16Ω

<3.3µA

Pin 5 (tip switch) is NC,
open when inserted

If just headphones then
HP_DET=HIGH, R(mic)=0

may add ~220uF cap
parallel to Zener

SMD Equivalent:
SJ-43515RS-SMT-TR

SJ-43515TS

Built-In Speaker's Frequency Response:

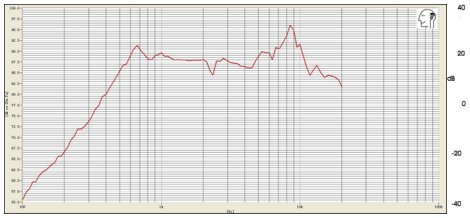

Built-In Mic's Frequency Response:

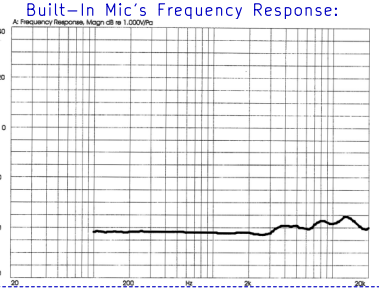

Simulation of HP_DET
without HP jack inserted:

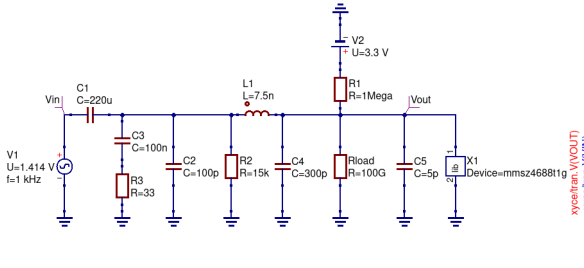

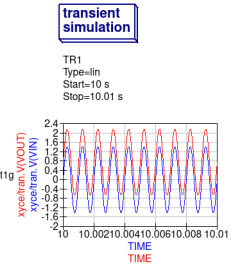

SW Mute Mic:
MUTE_ADC=1

Ext-Mic enabled
MIC_SEL=HIGH

Int-Mic enabled
MIC_SEL=LOW

SW1301B
MIC_CAM_HKS
DPDT with
camera
5->4 = ON
Note: 5->6 = OFF

All switches' pins
can be swapped
e.g. 5<->4
or 5<->6
(+camera)

−37dB=14.1254mV/Pa
∴ mic produces 14.1254mVrms when exposed to a
1kHz tone of 94dB-SPL at the capsule
(or 19.98mV amplitude)

⇒ 40dB gain would produce ~2V amplitude (4Vpp, clipping)
30dB gain would produce ~0.632V amplitude (1.264Vpp)
38.33dB gain would yield 3.3Vpp

LCR Measurements:

Earbud Microphone: @1kHz	Headset Speaker: @1kHz	Earbud Speaker: @1kHz
Ls = 3.844mH	Ls = 244.4uH	Ls = 25.2uH
Lp = 15.757H	Lp = 141.99mH	Lp = 311.0mH
Cs = 6.583uF	Cs = 103.6uF	Cs = 1.0mF
Cp = 1612.8pF	Cp = 178.77nF	Cp = 81.95nF
Rs = 1.5465kOhms	Rs = 36.860hms	Rs = 17.0300hms
Rp = 1.5478kOhms	Rp = 36.860hms	Rp = 17.034Ohms
θ = −0.8deg	θ = −2.3deg	θ = 0.5deg

Audio

Purism

Copyright 2018 GNU GPLv3

eric.kuzmenko@puri.sm
angus.ainslie@puri.sm
nicole.faerber@puri.sm
christian.schilmoeller@puri.sm

Sheet: /Audio/
File: audio.sch

Size: A4 | Date: 2018-07-17 | **Rev: v0.1.0**
KiCad E.D.A. kicad 5.0.0 | Id: 16/24

RGMII 10/100/1000 Ethernet

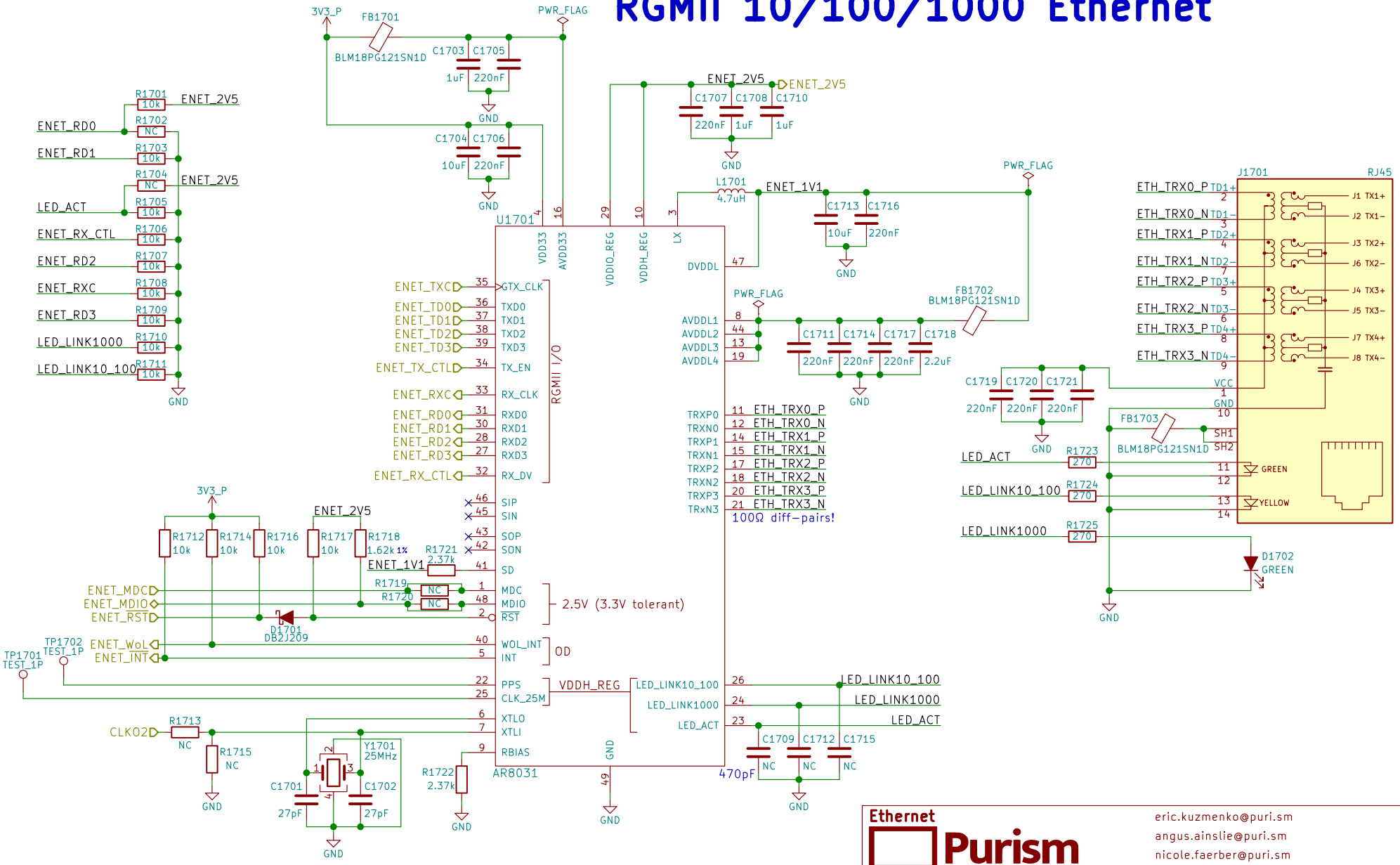

Ethernet

Purism

eric.kuzmenko@puri.sm
angus.ainslie@puri.sm
nicole.faerber@puri.sm
christian.schilmoeller@puri.sm

Copyright 2018 GNU GPLv3

Sheet: /Ethernet/
File: ethernet.sch

Size: A4 | Date: 2018-07-17 | Rev: v0.1.0

KiCad E.D.A. kicad 5.0.0 | Id: 17/24

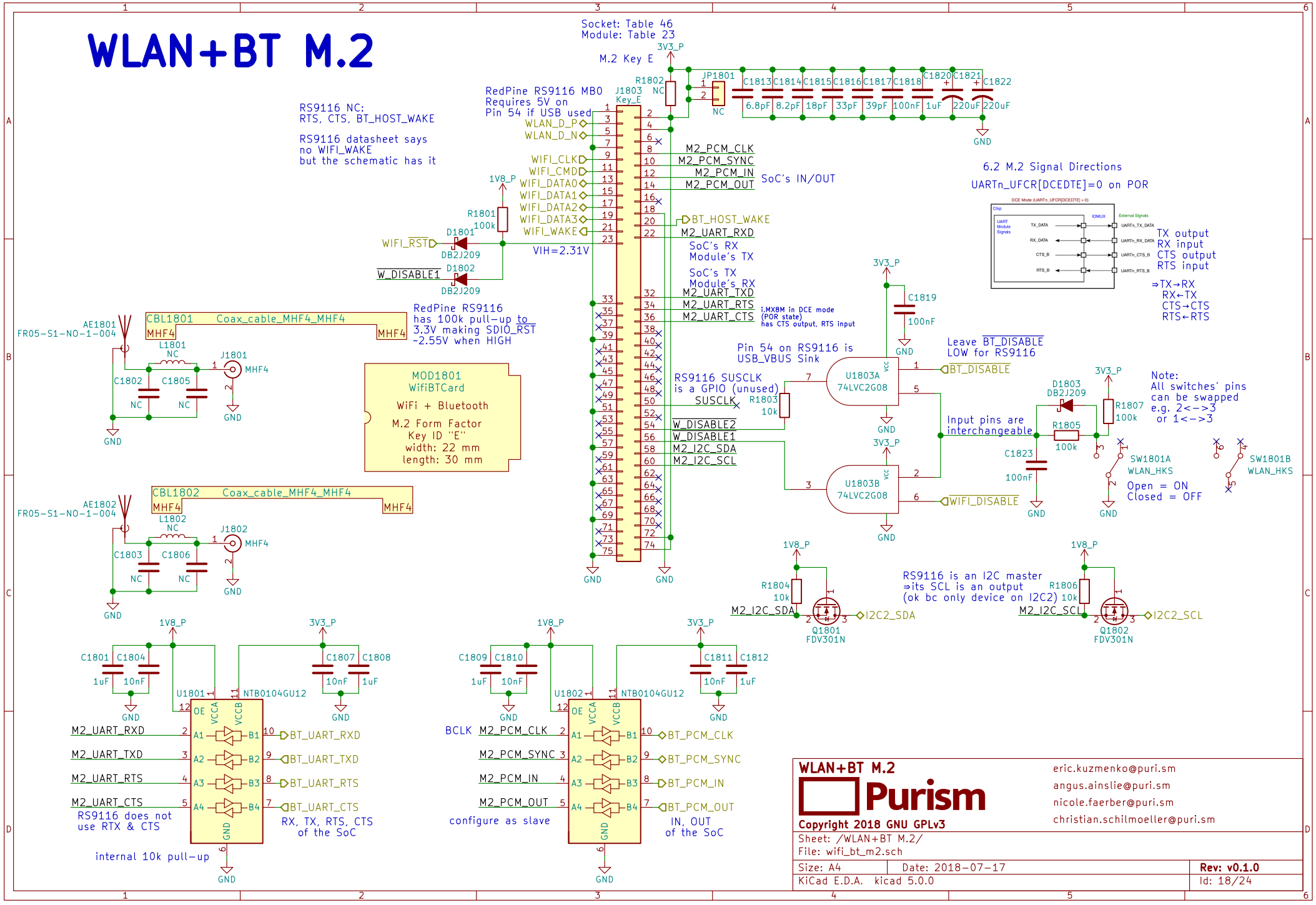
WLAN+BT M.2
Socket: Table 46
Module: Table 23
M.2 Key E
RedPine RS9116 MB0
Requires 5V on
Pin 54 if USB used
RS9116 NC:
RTS, CTS, BT_HOST_WAKE
RS9116 datasheet says
no WIFI_WAKE
but the schematic has it
SoC's IN/OUT
SoC's RX
Module's TX
SoC's TX
Module's RX
VIH=2.31V
RedPine RS9116
has 100k pull-up to
3.3V making SDIO_RST
~2.55V when HIGH
MOD1801
WifiBTCard
WiFi + Bluetooth
M.2 Form Factor
Key ID "E"
width: 22 mm
length: 30 mm
6.2 M.2 Signal Directions
UARTn_UFCR[DCEDTE]=0 on POR
TX output
RX input
CTS output
RTS input
⇒TX→RX
RX←TX
CTS→CTS
RTS←RTS
Pin 54 on RS9116 is
USB_VBUS Sink
Leave BT_DISABLE
LOW for RS9116
RS9116 SUSCLK
is a GPIO (unused)
Input pins are
interchangeable
Note:
All switches' pins
can be swapped
e.g. 2<->3
or 1<->3
SW1801A
WLAN_HKS
Open = ON
Closed = OFF
SW1801B
WLAN_HKS
RS9116 is an I2C master
⇒its SCL is an output
(ok bc only device on I2C2)
RS9116 does not
use RTX & CTS
RX, TX, RTS, CTS
of the SoC
internal 10k pull-up
configure as slave
IN, OUT
of the SoC
WLAN+BT M.2
Purism
Copyright 2018 GNU GPLv3
eric.kuzmenko@puri.sm
angus.ainslie@puri.sm
nicole.faerber@puri.sm
christian.schilmoeller@puri.sm
Sheet: /WLAN+BT M.2/
File: wifi_bt_m2.sch
Size: A4
Date: 2018-07-17
Rev: v0.1.0
KiCad E.D.A. kicad 5.0.0
Id: 18/24

TUSB1046 can be used for DP over USB-C

HDMI

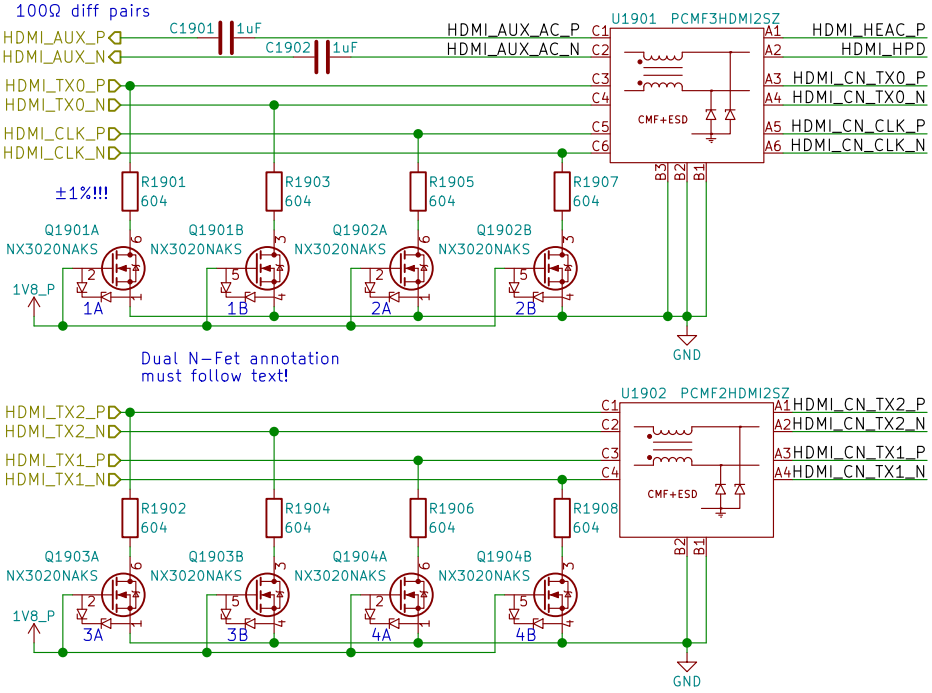

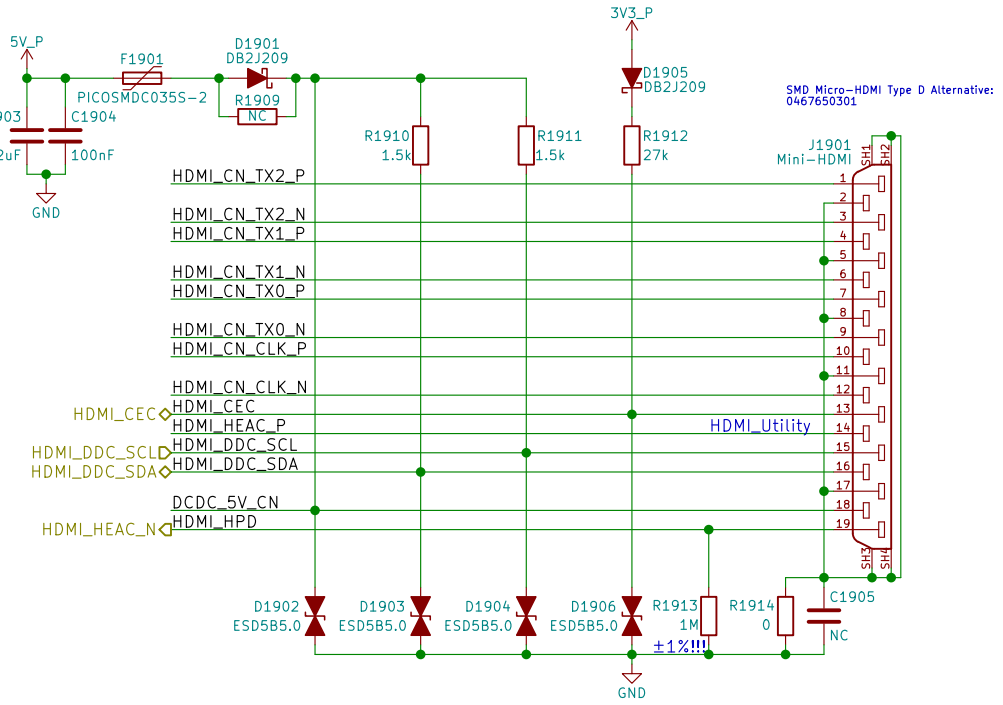

HDMI

Purism

Copyright 2018 GNU GPLv3

eric.kuzmenko@puri.sm
angus.ainslie@puri.sm
nicole.faerber@puri.sm
christian.schilmoeller@puri.sm

Sheet: /HDMI/
File: hdmi.sch

Size: A4 | Date: 2018-07-17 | **Rev: v0.1.0**

KiCad E.D.A. kicad 5.0.0 | Id: 19/24

Sensors

Proximity & Ambient Light

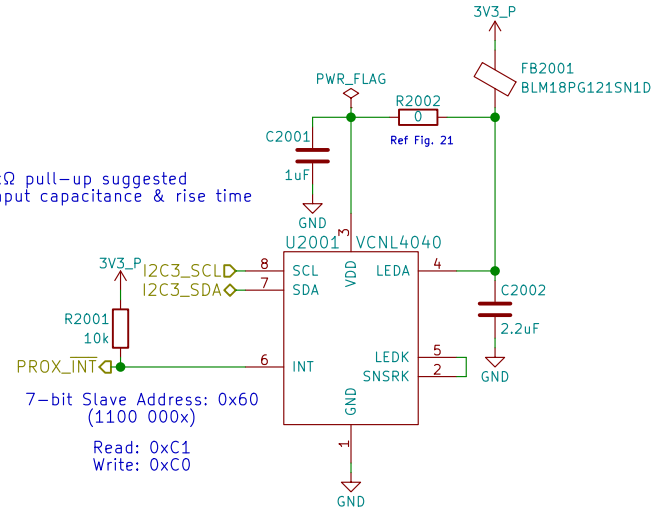

Note:
I2C 2.2kΩ pull-up suggested
check input capacitance & rise time

7-bit Slave Address: 0x60
(1100 000x)

Read: 0xC1
Write: 0xC0

Reference:
https://www.vishay.com/docs/84307/designingvcnl4040.pdf
http://www.vishay.com/docs/84931/vcnl4040sensorboardfiles.pdf

9-Axis IMU

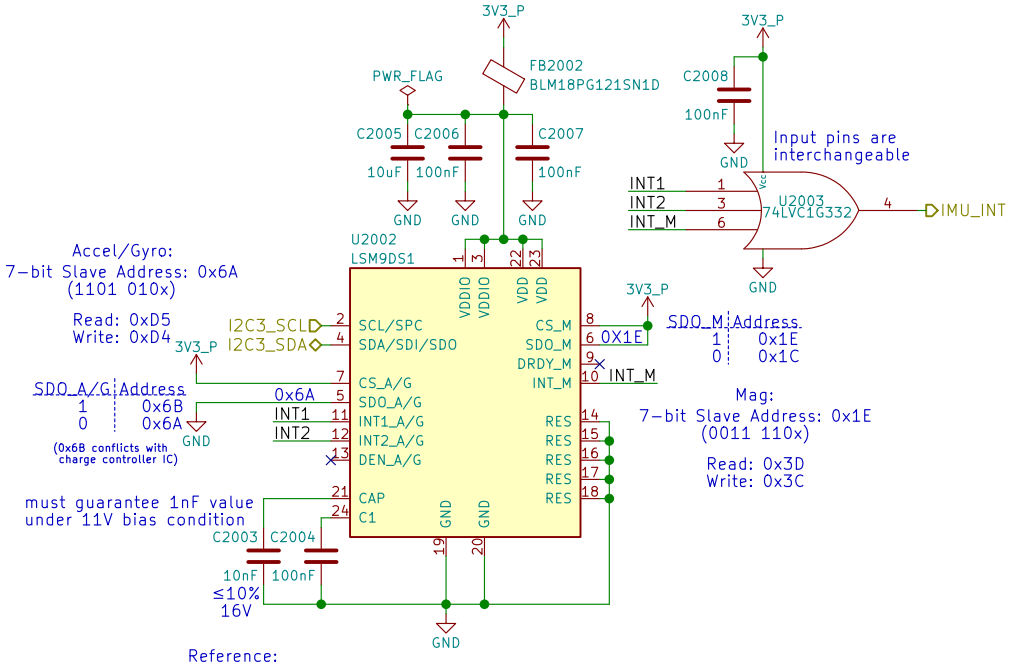

Accel/Gyro:
7-bit Slave Address: 0x6A
(1101 010x)

Read: 0xD5
Write: 0xD4

Mag:
7-bit Slave Address: 0x1E
(0011 110x)

Read: 0x3D
Write: 0x3C

Reference:
http://www.st.com/en/evaluation-tools/steval-mki159v1.html

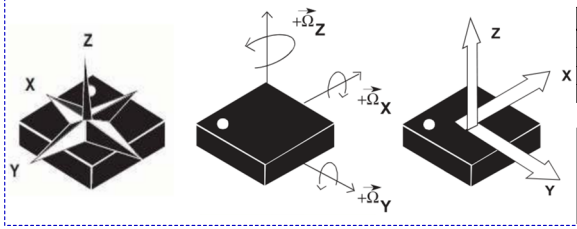

Table 19. Accelerometer and gyroscope SAD+Read/Write patterns

Command	SAD[6:1]	SAD[0] = SA0	R/W	SAD+R/W
Read	110101	0	1	11010101 (D5h)
Write	110101	0	0	11010100 (D4h)
Read	110101	1	1	11010111 (D7h)
Write	110101	1	0	11010110 (D6h)

Table 20. Magnetic sensor SAD+Read/Write patterns

Command	SAD[6:2]	SAD[1] = SDO/SA1	SAD[0]	R/W	SAD+R/W
Read	00111	0	0	1	00111001 (39h)
Write	00111	0	0	0	00111000 (38h)
Read	00111	1	0	1	00111101 (3Dh)
Write	00111	1	0	0	00111100 (3Ch)

Sensors

Purism

Copyright 2018 GNU GPLv3

eric.kuzmenko@puri.sm
angus.ainslie@puri.sm
nicole.faerber@puri.sm
christian.schilmoeller@puri.sm

Sheet: /Sensors/
File: sensors.sch

Size: A4 | Date: 2018-07-17 | **Rev: v0.1.0**
KiCad E.D.A. kicad 5.0.0 | Id: 20/24

SPI NOR Flash

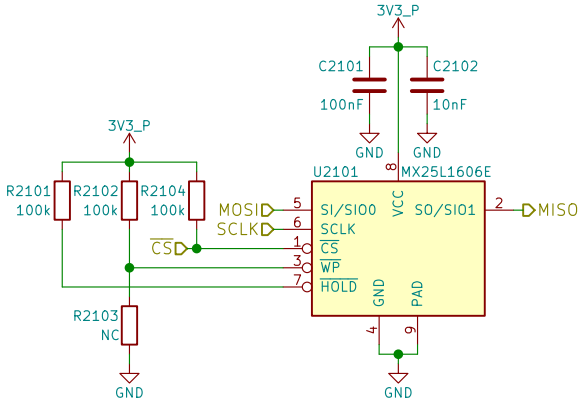

SPI NOR Flash		eric.kuzmenko@puri.sm angus.ainslie@puri.sm nicole.faerber@puri.sm christian.schilmoeller@puri.sm
Purism		
Copyright 2018 GNU GPLv3		
Sheet: /SPI Flash/ File: flash.sch		
Size: A4	Date: 2018-07-17	**Rev: v0.1.0**
KiCad E.D.A. kicad 5.0.0		Id: 21/24

Smart Card

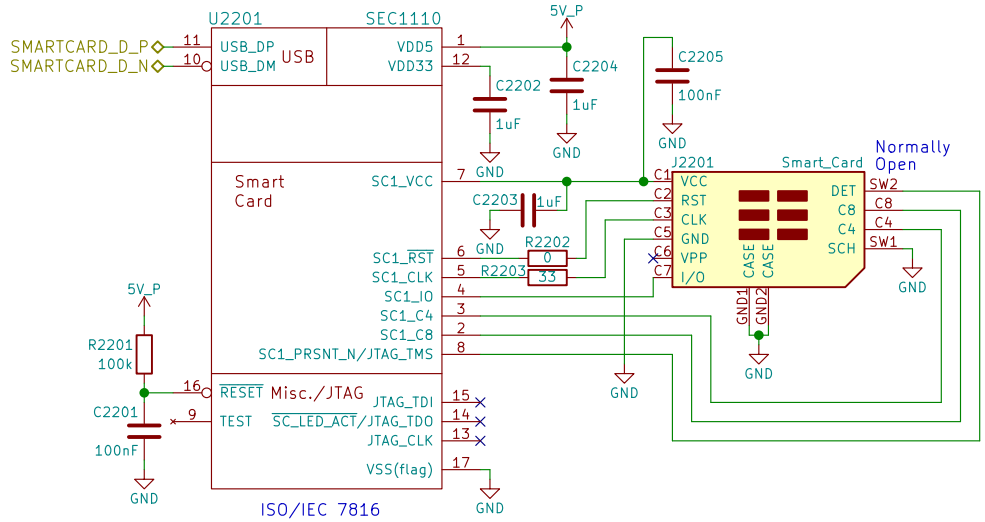

Reference:
http://www.microchip.com/DevelopmentTools/ProductDetails.aspx?PartNO=EVB-SEC1110

Smart Card

Purism

Copyright 2018 GNU GPLv3

eric.kuzmenko@puri.sm
angus.ainslie@puri.sm
nicole.faerber@puri.sm
christian.schilmoeller@puri.sm

Sheet: /Smart Card/
File: smartcard.sch

Size: A4 | Date: 2018-07-17 | **Rev: v0.1.0**
KiCad E.D.A. kicad 5.0.0 | Id: 22/24

GNSS

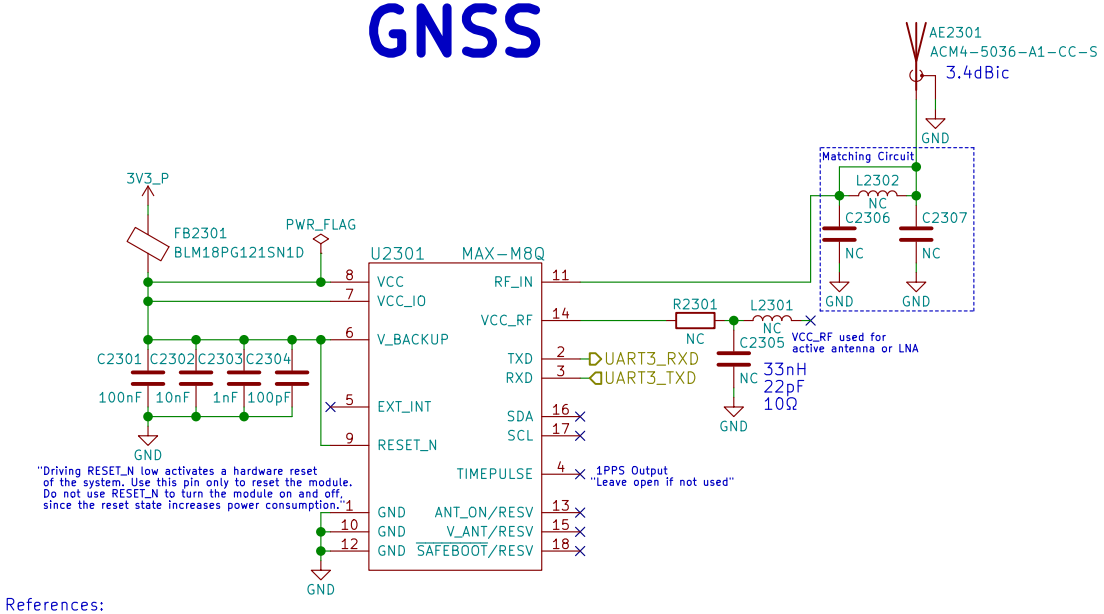

References:
https://www.u-blox.com/sites/default/files/MAX-M8_HardwareIntegrationManual_%28UBX-13004876%29.pdf
https://www.u-blox.com/sites/default/files/MAX-8-M8-FW3_HardwareIntegrationManual_%28UBX-15030059%29.pdf

GNSS

Purism

Copyright 2018 GNU GPLv3

eric.kuzmenko@puri.sm
angus.ainslie@puri.sm
nicole.faerber@puri.sm
christian.schilmoeller@puri.sm

Sheet: /GNSS/
File: gnss.sch

Size: A4	Date: 2018-07-17	**Rev: v0.1.0**
KiCad E.D.A. kicad 5.0.0		Id: 23/24

Haptic Motor

PWM pins occupied:
GPIO1_IO01 – LCD Backlight
GPIO1_IO13 – LED
GPIO1_IO14 – Ethernet (CLKO_25MHz)
GPIO1_IO15 – CSI (CLKO2)

PWM needed?
Only needs to be toggled
ON 1 sec, OFF 1 sec (0.5Hz)

Can MUX as either
GPIO or PWM2
swapping with LED

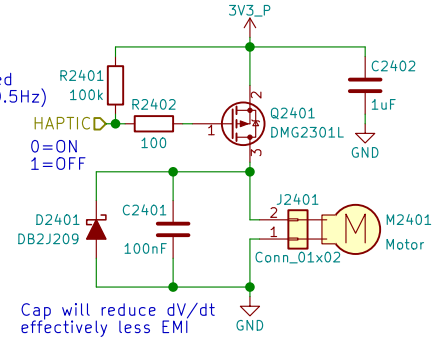

Cap will reduce dV/dt
effectively less EMI

When the motor is off
both terminals are at GND

Motor will have wire leads
with a 2-pin Molex or Boom Precision
connector installed (by request)

Metal housing is floating
thick adhesive layer underneath
(not connected to either pin)

Haptic/Vibration Motor

Purism

Copyright 2018 GNU GPLv3

eric.kuzmenko@puri.sm
angus.ainslie@puri.sm
nicole.faerber@puri.sm
christian.schilmoeller@puri.sm

Sheet: /Haptic Motor/
File: haptic.sch

Size: A4	Date: 2018-07-17	**Rev: v0.1.0**
KiCad E.D.A. kicad 5.0.0		Id: 24/24