SoM

Note:
Leave annotation
as P1, P2, P3, P4

MIPI

CSI_P1_D3P
CSI_P1_D3N
CSI_P1_D1P
CSI_P1_D1N
CSI_P1_D2P
CSI_P1_D2N
CSI_P1_D0P
CSI_P1_D0N
CSI_P1_CKP
CSI_P1_CKN
CLKO1
CSI_RST
CSI_PWDN

Note: Some I2C devices require SDA/SCL to be high before powering them

3V3_OUT is sourced from PMIC's 3A NVCC_3P3/BUCK6 and is supplying the SoC's H7 ball "NVCC_I2C"

3V3_OUT
R101 2.2k
R102 2.2k

GPIO3_IO19 (was LED1)
IMU_INT

Sensors

IMU_INT
I2C1_SCL
I2C1_SDA
PROX_INT
sensors.sch

I2C1_SCL
I2C1_SDA

PROX_INT
GPIO1_IO12 (was IR_CAP)

I2C1_SCL
I2C1_SDA

RTC

I2C1_SCL
I2C1_SDA
IRQ
rtc.sch

LCD_LEDK
LCD_RESET
DSI_D2P
DSI_D2N
DSI_D0P
DSI_D0N
DSI_CKP
DSI_CKN
DSI_D1P
DSI_D1N
DSI_D3P
DSI_D3N
CAPTOUCH_INT
CAPTOUCH_RST
SAI1_RXD3(GPIO4_IO05)
mipi.sch

Buttons & LED

SW_VOLUP
SW_VOLDN
ONOFF
SYS_RST
GP_LED1
BTN1
BTN2
ONOFF
SYS_RST
LED
buttons_led.sch

MNT101 Mount_Hole
MNT102 Mount_Hole
MNT103 Mount_Hole
MNT104 Mount_Hole
FID101 Fiducial
FID102 Fiducial
FID103 Fiducial
GND

MOD101
EmC_SoM
Daughterboard
plugged into
main PCB
P1
P2
P3
P4

P1 IMX8M-SOM1

P1.31 CSI_P1_D3P
P1.33 CSI_P1_D3N
P1.37 CSI_P1_D1P
P1.39 CSI_P1_D1N
P1.43 CSI_P1_D2P
P1.45 CSI_P1_D2N
P1.53 CSI_P1_D0P
P1.55 CSI_P1_D0N
P1.59 CSI_P1_CKP
P1.61 CSI_P1_CKN
P1.65 TCPC_INT
P1.04 CLKO1
P1.08 CSI_RST
P1.10 CSI_PWDN
P1.12
P1.14
P1.18
P1.22
P1.24
P1.26
P1.28
P1.32
P1.36
P1.40
P1.42
P1.46 SD2_RST
P1.48
P1.50
P1.52
P1.54
P1.56
P1.58 uSD_CD_B
P1.60
P1.64 WWAN_DISABLE
P1.72 USB1_SS_SEL
P1.74
P1.78 LCD_RESET
P1.80

Ethernet

ENET_TXC
ENET_TD0
ENET_TD1
ENET_TD2
ENET_TD3
ENET_TX_CTL
ENET_RD3
ENET_RD2
ENET_RD1
ENET_RD0
ENET_RX_CTL
ENET_RXC
ENET_MDIO
ENET_MDC
CLKO2
ENET_RST
ENET_WoL
ENET_INT
ENET_2V5
ethernet.sch

WLAN+BT M.2

WIFI_RST
WIFI_DATA3
WIFI_DATA2
WIFI_DATA1
WIFI_DATA0
WIFI_WAKE
WIFI_CMD
WIFI_CLK
BT_HOST_WAKE
BT_PCM_SYNC
BT_PCM_CLK
BT_PCM_IN
BT_PCM_OUT
WLAN_DP
WLAN_DN
BT_UART_TXD
BT_UART_RXD
BT_UART_RTS
BT_UART_CTS
WIFI_DISABLE
BT_DISABLE
I2C2_SDA
I2C2_SCL
SAI5_TX_BCLK
SAI5_TX_SYNC
SAI5_RXD
SAI5_TXD
WLAN_DP
WLAN_DN
UART4_TXD
UART4_RXD
UART4_RTS
UART4_CTS
WIFI_DISABLE
BT_DISABLE
wifi_bt_m2.sch

3V3_OUT
R103 10k
R104 10k
I2C2_SDA
I2C2_SCL

5V_SOM
C101 22uF
C102 22uF
C103 100nF
C104 100nF
C105 22uF
C106 22uF
C107 100nF
C108 100nF
3V3_OUT
3V3_SNVS
GND

P2.55 P2.56 P2.57 P2.58 P2.59 P2.60 P2.61 P2.62 P2.63 P2.64 P2.65 P2.66 P2.67 P2.68 P2.69 P2.70 P2.71 P2.72 P2.73 P2.74 P2.75 P2.76 P2.77 P2.78 P2.79 P2.80
+5V Input
P2.14
P2.16
P2.18 +3.3V Output
P2.24 +3.3V Output
P2.22 +2.5V Input

JTAG

JTAG_TDI
JTAG_TMS
JTAG_TRST
JTAG_TDO
JTAG_TCK
POR_B
jtag.sch

TP101
TEST_1P

P3 IMX8M-SOM3

P3.01
P3.03
P3.05
P3.07 JTAG_TDI
P3.09 JTAG_TMS
P3.11 JTAG_TRST
P3.13 JTAG_TDO
P3.15 JTAG_TCK
P3.21 DSI_BL_PWM
P3.23 WDG
P3.25 HDMI_DDC_SCL
P3.27 HDMI_DDC_SDA
P3.29 CSI_PWDN
P3.35 IMU_INT
P3.37 CSI_RST
P3.41 PWR_EN
P3.43 SAI5_RXD
P3.45 ENET_RST
P3.53 HP_DET
P3.57 PROX_INT
P3.59 SAI1_RXD0(GPIO4_IO02)
P3.61 SAI5_TXD
P3.63 LED
P3.65 SAI1_RXD4(GPIO4_IO06)
P3.67 SAI1_RXD3(GPIO4_IO05)
P3.69 BTN1
P3.73 SAI1_RXD2(GPIO4_IO04)
P3.75 SAI2_TXFS
P3.77 SAI2_RXD
P3.79 SAI1_RXD6(GPIO4_IO08)
P3.02
P3.06
P3.08
P3.12
P3.14
P3.18
P3.20
P3.24
P3.26
P3.30
P3.32
P3.36
P3.42
P3.44
P3.46
P3.48
P3.58
P3.62
P3.66
P3.70
P3.74
P3.78

R107 10k
GND

HDMI

HDMI_CEC
HDMI_HPD
HDMI_AUXN
HDMI_AUXP
HDMI_TX1P
HDMI_TX1N
HDMI_TX0P
HDMI_TX0N
HDMI_TX2P
HDMI_TX2N
HDMI_CLKP
HDMI_CLKN
HDMI_DDC_SCL
HDMI_DDC_SDA
hdmi.sch

SAI5_TX_BCLK
ENET_WoL
SAI1_RXD1(GPIO4_IO03)
SAI5_TX_SYNC
ENET_INT
CHRG_INT
CLKO2
CLKO1
BTN2
GPIO5_IO05 (was PWM1)

Audio

SAI2_TXC
SAI2_MCLK
MIC_SEL
HP_DET
SAI2_TXFS
SAI2_RXD
SAI2_TXD
I2C1_SDA
I2C1_SCL
audio.sch

HP_DET
GPIO3_IO20

SPI Flash

MISO
MOSI
SCLK
CS
flash.sch

ECSPI1_MISO
ECSPI1_MOSI

USB Hub + SDIO Bridge

WWAN_DP
WWAN_DN
WLAN_DP
WLAN_DN
SMARTCARD_DP
SMARTCARD_DN
USB2_ID
SRST
SDCD
uSD_CLK
uSD_CMD
uSD_DATA0
uSD_DATA1
USB2_DN
USB2_DP
uSD_DATA2
uSD_DATA3
usb_hub_sdio.sch

WLAN_DP
WLAN_DN
USB2_ID
SD2_RST

Boot Config

BOOT_MODE1
BOOT_MODE0
BOOT_CFG00 SAI1_RXD0(GPIO4_IO02)
BOOT_CFG01 SAI1_RXD1(GPIO4_IO03)
BOOT_CFG02 SAI1_RXD2(GPIO4_IO04)
BOOT_CFG03 SAI1_RXD3(GPIO4_IO05)
BOOT_CFG04 SAI1_RXD4(GPIO4_IO06)
BOOT_CFG05 SAI1_RXD5(GPIO4_IO07)
BOOT_CFG06 SAI1_RXD6(GPIO4_IO08)
BOOT_CFG07 SAI1_RXD7(GPIO4_IO09)
BOOT_CFG08 SAI1_TXD0(GPIO4_IO12)
BOOT_CFG09 SAI1_TXD1(GPIO4_IO13)
BOOT_CFG10 SAI1_TXD2(GPIO4_IO14)
BOOT_CFG11 SAI1_TXD3(GPIO4_IO15)
BOOT_CFG12 SAI1_TXD4(GPIO4_IO16)
BOOT_CFG13 SAI1_TXD5(GPIO4_IO17)
BOOT_CFG14 SAI1_TXD6(GPIO4_IO18)
BOOT_CFG15 SAI1_TXD7(GPIO4_IO19)
boot.sch

Alternate Functions:
CAPTOUCH_RST
SAI6_TXD0
SAI6_TXFS/RXFS
SAI6_TXC/RXC
SAI6_RXD0

WWAN mPCIe

WoWWAN
W_DISABLE1
RESET
PCM_CLK/I2S_SCK
PCM_SYNC/I2S_FSC
PCM_IN/I2S_IN
PCM_OUT/I2S_OUT
wwan_mpcie.sch

WoWWAN
GPIO3_IO08
WWAN_DISABLE
GPIO3_IO04
WWAN_RESET
GPIO3_IO09
SAI1_TXD4(GPIO4_IO16)
SAI6_TXC/RXC
SAI1_RXD6(GPIO4_IO08)
SAI6_TXFS/RXFS
SAI1_RXD5(GPIO4_IO07)
SAI6_TXD0
SAI1_TXD5(GPIO4_IO17)
SAI6_RXD0

Smart Card

SMARTCARD_DP
SMARTCARD_DN
smartcard.sch

uSD Card

CONN_SD2_CD_B
CONN_SD2_CLK
CONN_SD2_CMD
CONN_SD2_DATA0
CONN_SD2_DATA1
CONN_SD2_DATA2
CONN_SD2_DATA3
sd.sch

USB-C

USB1_SS_SEL
USB1_RXN
USB1_RXP
USB1_TXN
USB1_TXP
USB1_DN
USB1_DP
TCPC_INT
USB1_ID
USB1_VBUS
I2C1_SCL
I2C1_SDA
VBUS
EN_SRC
EN_SNK
usb-c.sch

USB1_SS_SEL
TCPC_INT
I2C1_SCL
I2C1_SDA

Battery

VBUS
EN_SRC
EN_SNK
CHRG_INT
I2C1_SCL
I2C1_SDA
ONOFF
battery.sch

VBUS
EN_SRC
EN_SNK
CHRG_INT
GPIO3_IO25
ONOFF

Power

VBAT_REG
LEDK
PWM
PWR_EN
5V_SOM
5V_P
3V3
3V3_P
1V8_P
22V4_P
2V8_P
power.sch

VBAT_REG
LCD_LEDK
DSI_BL_PWM
PWR_EN
5V_SOM
5V_P
3V3
3V3_P
1V8_P
22V4_P
2V8_P

P2 IMX8M-SOM2

P2.25 WIFI_DISABLE
P2.27 WWAN_RESET
P2.31 WoWWAN
P2.33 CAPTOUCH_INT
P2.37
P2.39
P2.43
P2.45
P2.49
P2.51
P2.02
P2.04
P2.08
P2.10

NC
GND
P1.03
P1.05
P1.09
P1.13
P1.15
P1.21
P1.23
P1.27
P1.49
P1.68
P1.69
P1.70
P1.71
P1.75
P1.76
P1.77
P2.03
P2.05
P2.06
P2.09
P2.11
P2.12
P2.15
P2.17
P2.20
P2.21
P2.26
P1.01
P1.02
P1.06
P1.07
P1.11
P1.16
P1.17
P1.19
P1.20
P1.25
P1.29
P1.30
P1.34
P1.35
P1.36
P1.38
P1.41
P1.44
P1.47
P1.51
P1.57
P1.62
P1.63
P1.66
P1.67
P1.73
P1.79
P2.01
P2.07
P2.13
P2.19
P2.23
P2.28
P2.29
P2.30
P2.32
P2.34
P2.35
P2.36
P2.38
P2.40
P2.41
P2.42
P2.44
P2.46
P2.47
P2.48
P2.50
P2.52
P2.53
P2.54
P3.04
P3.10
P3.16
P3.17
P3.22
P3.28
P3.34
P3.38
P3.47
P3.51
P3.52
P3.55
P3.56
P3.60
P3.64
P3.68
P3.72
P3.76
P3.80
P4.06
P4.10
P4.14
P4.18
P4.24
P4.28
P4.34
P4.40
P4.44
P4.50
P4.54
P4.59
P4.60
P4.62
P4.63
P4.68
P4.74
P4.80
P3.19
P3.31
P3.33
P3.39
P3.40
P3.49
P3.50
P3.54
P3.71
PWM3
PWM4
P4.03
P4.09
P4.12
P4.17
P4.20
P4.31
P4.32
P4.36
P4.38
P4.43
P4.46
P4.48
P4.52
P4.57
P4.61
P4.69

Spare GPIO:
GPIO1_IO05 (was CSI_P2_PWDN)
GPIO5_IO03 (was PWM3)
GPIO5_IO18 (PWM4/CLKO2/I2C3_SCL)

GPIO that can be swapped around:
GPIO1_IO05 (was CSI_P2_PWDN)
GPIO1_IO12 (was IR_CAP)
GPIO3_IO19 (was LED1)
GPIO3_IO20
GPIO3_IO25
GPIO5_IO03 (was PWM3)
GPIO5_IO04 (was PWM2)
GPIO5_IO05 (was PWM1)
GPIO5_IO18 (PWM4/CLKO2/I2C3_SCL)

UART Debug

UART1_RXD
UART1_TXD
uart.sch

GNSS

UART3_RXD
UART3_TXD
gnss.sch

Haptic Motor

HAPTIC
haptic.sch

HAPTIC
GPIO5_IO04 (was PWM2)

5V_P
R105 10k
R106 19.6k
GND

P4 IMX8M-SOM4

P4.01 SAI2_TXD
P4.05 HAPTIC GPIO5_IO04
P4.07 SAI1_RXD5(GPIO4_IO07)
P4.11 SAI1_TXD0(GPIO4_IO12)
P4.13 ONOFF
P4.15 I2C2_SDA
P4.19 SAI1_TXD1(GPIO4_IO13)
P4.21 SYS_RST
P4.23 I2C1_SCL
P4.25 I2C1_SDA
P4.27 SAI1_TXD3(GPIO4_IO15)
P4.29 SAI1_TXD4(GPIO4_IO16)
P4.33 SAI1_TXD7(GPIO4_IO19)
P4.35 UART3_TXD
P4.37 BT_DISABLE
P4.39 SAI1_TXD5(GPIO4_IO17)
P4.41 POR_B
P4.45 UART1_RXD
P4.47 SAI1_TXD2(GPIO4_IO14)
P4.49 SAI1_TXD6(GPIO4_IO18)
P4.51 ECSPI1_MOSI
P4.53 UART4_CTS
P4.55 UART3_RXD
P4.65 ECSPI1_MISO
P4.67 UART4_RTS
P4.71 UART1_TXD
P4.73 USB2_VBUS
P4.75 USB2_ID
P4.77
P4.79
P4.02
P4.04
P4.08
P4.16
P4.22
P4.26
P4.30
P4.42
P4.56
P4.58
P4.64
P4.66
P4.70
P4.72
P4.76
P4.78

SAI1_RXD7(GPIO4_IO09)
I2C2_SCL
IRQ
UART4_TXD
ECSPI1_SCLK
ECSPI1_SS0
UART4_RXD

EmCraft System on Module

NXP i.MX 8M Quad Applications Processor with DDR4 LPRAM and eMMC
Connectors: 4x dual row 80 pin 0.4mm pitch headers (P1..P4)

Copyright 2018 GNU GPLv3

Librem 5 Dev Kit
Purism

eric.kuzmenko@puri.sm
angus.ainslie@puri.sm
nicole.faerber@puri.sm
christian.schilmoeller@puri.sm

Sheet: /
File: dvk-mx8m-bsb.sch

Size: A3	Date: 2018-06-18	Rev: v0.1.0
KiCad E.D.A. kicad 4.0.7		Id: 1/24

USB-C TCPC – Config Channel (CC) and PD Role Controller

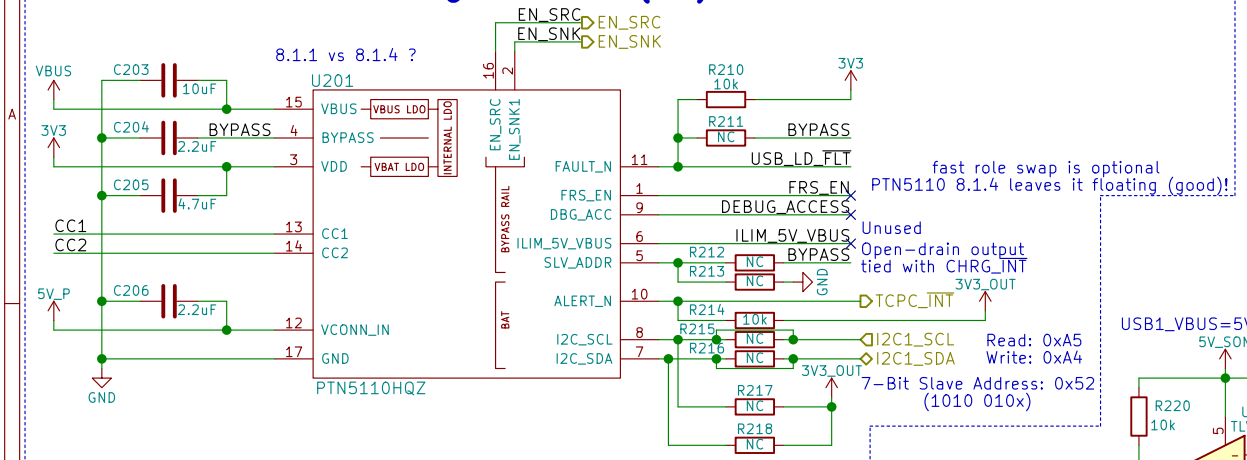

fast role swap is optional
PTN5110 8.1.4 leaves it floating (good)!

Unused

Open-drain output
tied with CHRG_INT

"Under dead battery operation, PTN5110 applies voltage clamps to both CC pins so that the system may receive power as a Sink. To support platforms with buck-boost configuration, PTN5110 asserts EN_SNK1 pin based on validity of VBUS voltage (facilitates 5 V VBUS sinking)."

USB-C

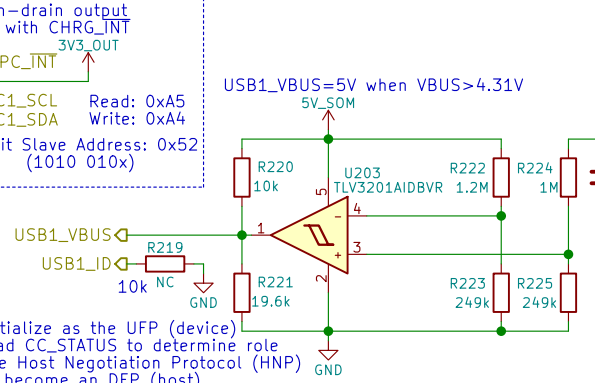

Initialize as the UFP (device)
read CC_STATUS to determine role
use Host Negotiation Protocol (HNP)
to become an DFP (host)
∴USB ID is effectively unused
⇒Legacy devices would "wait" for this
⇒If CC initializes as UFP then no HNP needed

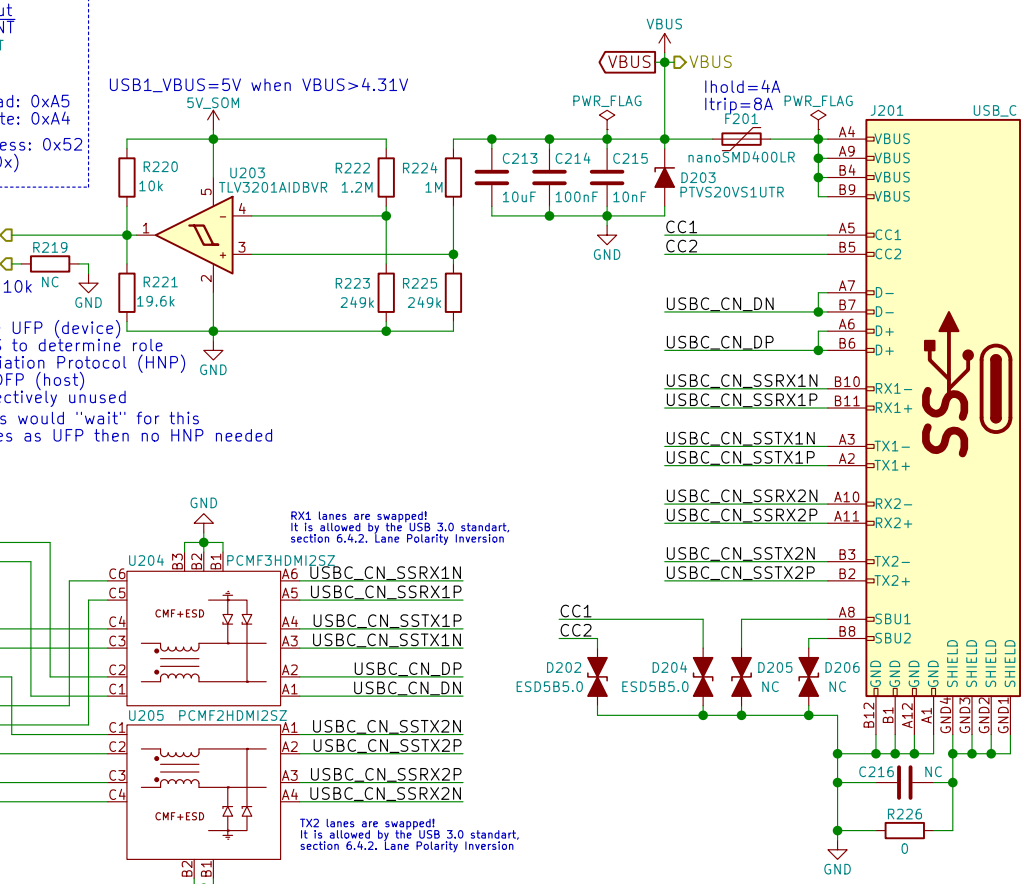

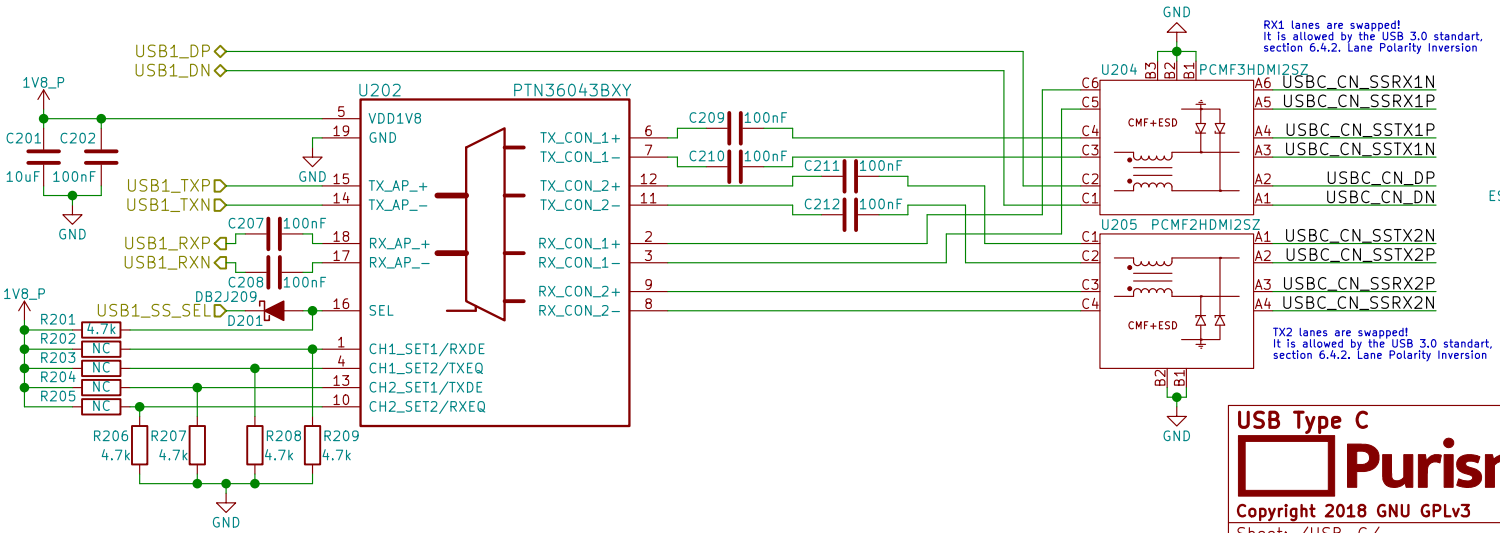

USB Type C

Purism

Copyright 2018 GNU GPLv3

eric.kuzmenko@puri.sm
angus.ainslie@puri.sm
nicole.faerber@puri.sm
christian.schilmoeller@puri.sm

Sheet: /USB-C/
File: usb-c.sch

Size: A4 | Date: 2018-06-18 | Rev: v0.1.0
KiCad E.D.A. kicad 4.0.7 | Id: 2/24

Battery Charge Controller

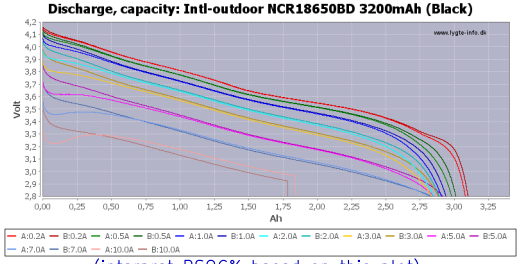

(interpret RSOC% based on this plot)

Drawing ~333.33mA, or consuming <1.2W, should give close to 10 hours going from 100% to 0% charge

use AUTO_DPDM_EN to auto-detect IINLIM

1.658≤ILIM≤2.063
ILIM(nom)≅1.859A
3.9≤VIN≤14

7-bit Slave Address: 0x6B (1101 011x)

U301 BQ25896

I(Lsat)=7A

Default LOW: adapter source

sink current ~5mA

Read: 0xD7
Write: 0xD6

Ihold=3.5A
Itrip=6.3A
Ttrip(max)=5s@8A

Vrwm(max)=5.0V
Vbr(min)=6.2V
Pd=150mW

Vf(max)=1.1V

VBAT(DPL)=2.15~2.5V

NCR18650B meets requirements

VBAT(ovp_default)=REG06[7:2]=4.208V (reduce to 4.192V [010110])
Worst Case:
VBAT(default_max_ovp)=(REG06[7:2]×1.005)×1.04=4.3982016V
BQ29705 provides 4.425V as OVP!

ICHG(default)=REG[6:0]=2048mA (reduce to ~1.6A [0011001])

reference design: http://www.ti.com/lit/ug/sluuba2b/sluuba2b.pdf

may want to include BQ29705 protection as in:
http://www.ti.com/lit/ug/tiducl1/tiducl1.pdf
schematic: http://www.ti.com/lit/df/tidrp70/tidrp70.pdf
(PTC may be good enough)

This disables charging
but maybe not VBUS->VOUT
if PTN5110HQ's FAULT_STATUS[6]==1
(Force Off VBUS bit) then set EN_HiZ=1
EN_HiZ may be auto-set when in hiccup

Reading PTN5110HQ's CC_STATUS and POWER_STATUS registers will tell TCPM (i.MX8M) when to set EN_HiZ

Also, reading PTN5110HQ's CC_STATUS and POWER_STATUS registers will tell TCPM (i.MX8M) when to set OTG_CONFIG=1
(this will also happen when PTN5110HQ sets EN_SRC HIGH)

BC1.2 is not mandated by PD spec
ICO used to determine max current
Also negotiated from CC pins (I2C)

Battery holder gives ~1mm clearance underneath the battery
Thermistor is 1.1±0.15mm thick, should fit fine with stack-up

Battery holder seems to fit up to ~68.88mm long batteries
need to test 18650 protected cells which are ~69.35mm long

Purism
eric.kuzmenko@puri.sm
angus.ainslie@puri.sm
nicole.faerber@puri.sm
christian.schilmoeller@puri.sm

Copyright 2018 GNU GPLv3

Battery		
Sheet: /Battery/		
File: battery.sch		
Size: A4	Date: 2018-06-18	Rev: v0.1.0
KiCad E.D.A. kicad 4.0.7		Id: 3/24

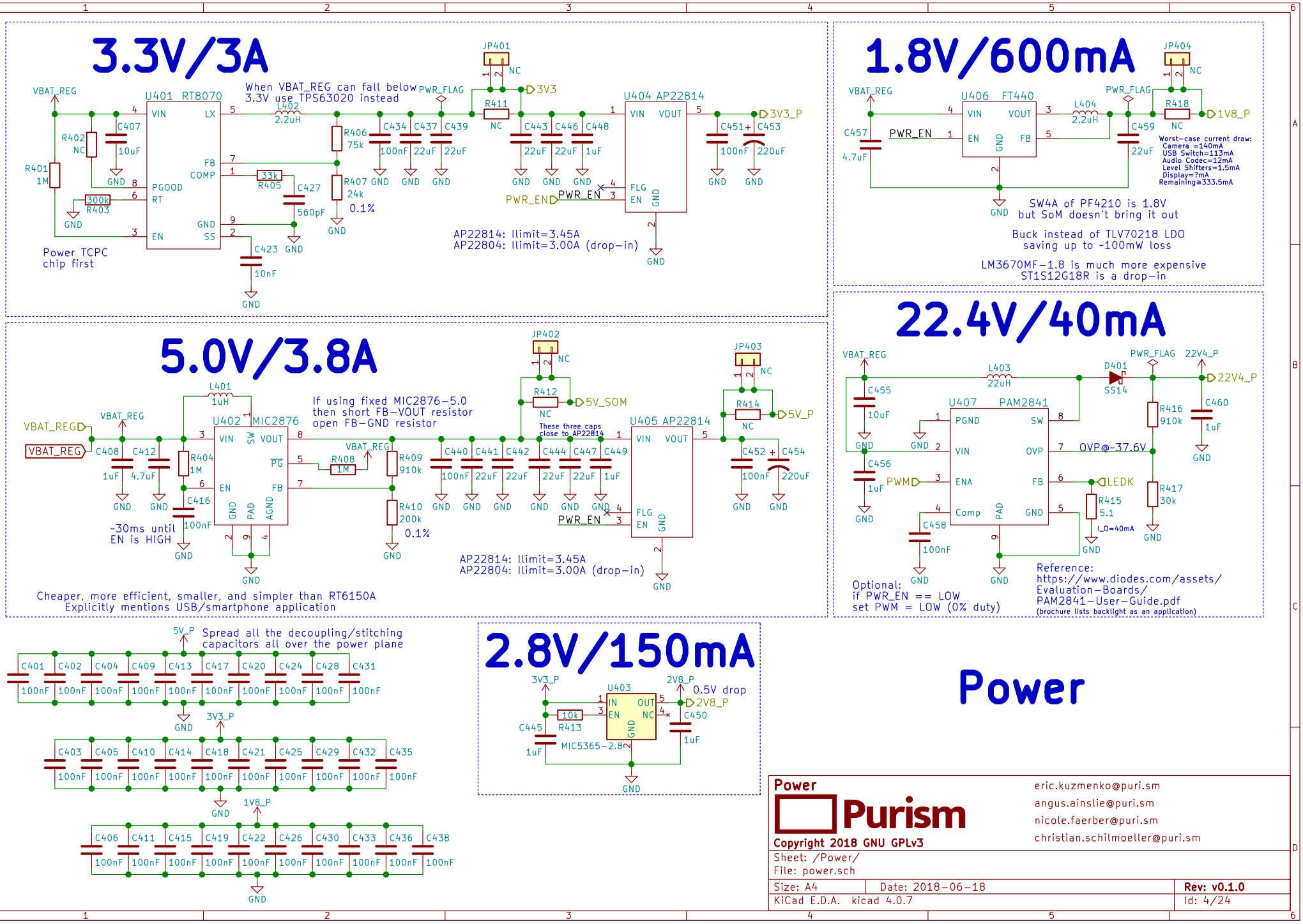
3.3V/3A
When VBAT_REG can fall below 3.3V use TPS63020 instead
Power TCPC chip first
AP22814: Ilimit=3.45A
AP22804: Ilimit=3.00A (drop-in)
1.8V/600mA
SW4A of PF4210 is 1.8V but SoM doesn't bring it out
Buck instead of TLV70218 LDO saving up to ~100mW loss
LM3670MF-1.8 is much more expensive
ST1S12G18R is a drop-in
Worst-case current draw:
Camera =140mA
USB Switch=113mA
Audio Codec=12mA
Level Shifters=1.5mA
Display=7mA
Remaining≥333.5mA
5.0V/3.8A
If using fixed MIC2876-5.0 then short FB-VOUT resistor open FB-GND resistor
~30ms until EN is HIGH
Cheaper, more efficient, smaller, and simpler than RT6150A
Explicitly mentions USB/smartphone application
AP22814: Ilimit=3.45A
AP22804: Ilimit=3.00A (drop-in)
22.4V/40mA
Optional: if PWR_EN == LOW set PWM = LOW (0% duty)
Reference: https://www.diodes.com/assets/Evaluation-Boards/PAM2841-User-Guide.pdf
(brochure lists backlight as an application)
Spread all the decoupling/stitching capacitors all over the power plane
2.8V/150mA
0.5V drop
Power
Purism
Copyright 2018 GNU GPLv3
eric.kuzmenko@puri.sm
angus.ainslie@puri.sm
nicole.faerber@puri.sm
christian.schilmoeller@puri.sm
Sheet: /Power/
File: power.sch
Size: A4
Date: 2018-06-18
Rev: v0.1.0
KiCad E.D.A. kicad 4.0.7
Id: 4/24

Boot Config

Only eMMC

BOOT_CFG[14:12]	Boot device
001	SD/eSD
010	MMC/eMMC
011	NAND

Fuse	Config	Definition	GPIO[1]	Shipped value	Settings
BOOT_CFG[11:10]	OEM	USDHC port selection	Yes	00	00 - USDHC-1
					01 - USDHC-2
					10 - USDHC-3
					else - reserved

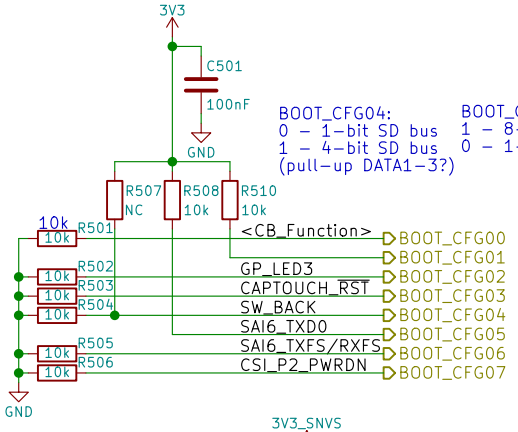

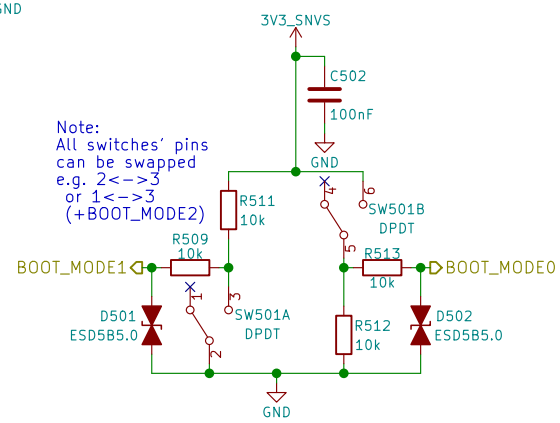

2->1: eMMC
2->3: USB (Serial Downloader)

BOOT_MODE[1:0]	Boot Type
00	Boot From Fuses
01	Serial Downloader
10	Internal Boot
11	Reserved

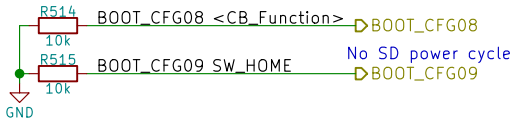

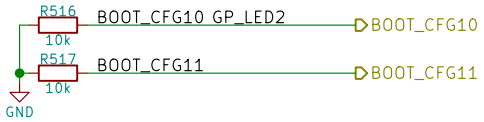

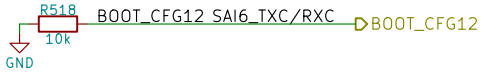

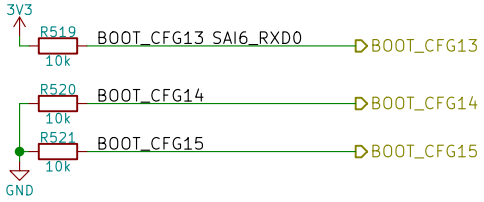

Boot Configuration

Purism

Copyright 2018 GNU GPLv3

eric.kuzmenko@puri.sm
angus.ainslie@puri.sm
nicole.faerber@puri.sm
christian.schilmoeller@puri.sm

Sheet: /Boot Config/
File: boot.sch

Size: A4 | Date: 2018-06-18 | **Rev: v0.1.0**
KiCad E.D.A. kicad 4.0.7 | Id: 5/24

Real-Time Clock

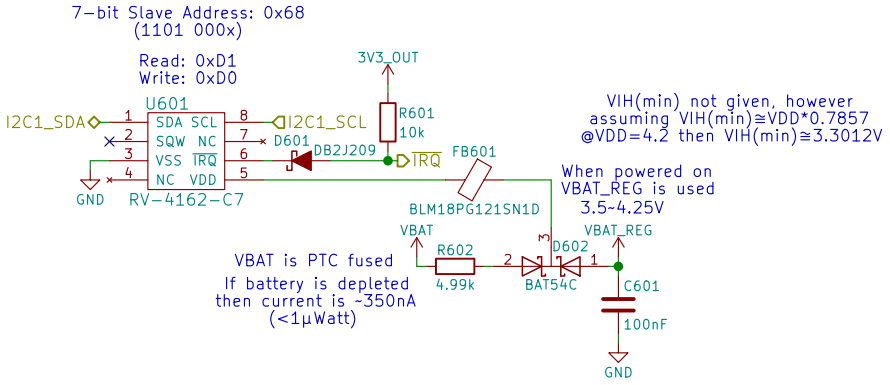

Note:
Datasheet says slave address is 0xD0
with a R/W bit appended, since 0xD must
be 4-bits wide the actual 7-bit address is
0x68 (110 1000), and becomes 0xD0 during a
write operation (1101 0000)

Reference:
https://github.com/HIO-Project/linux-imx6-nano-imx_3.10.17_1.0.1_ga/blob/8848e94b2f889fe44f6736e2d4c98851a2282275/arch/arm/boot/dts/imx6qdl-mtp.dtsi#L351

RTC

Purism

Copyright 2018 GNU GPLv3

eric.kuzmenko@puri.sm
angus.ainslie@puri.sm
nicole.faerber@puri.sm
christian.schilmoeller@puri.sm

Sheet: /RTC/
File: rtc.sch

Size: A4	Date: 2018-06-18	Rev: v0.1.0
KiCad E.D.A. kicad 4.0.7		Id: 6/24

UART Debug

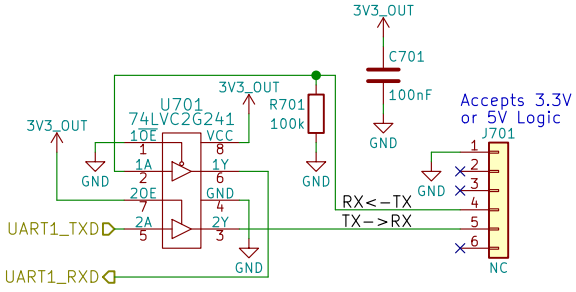

UART Debug		eric.kuzmenko@puri.sm
Purism		angus.ainslie@puri.sm
		nicole.faerber@puri.sm
Copyright 2018 GNU GPLv3		christian.schilmoeller@puri.sm
Sheet: /UART Debug/		
File: uart.sch		
Size: A4	Date: 2018-06-18	**Rev: v0.1.0**
KiCad E.D.A. kicad 4.0.7		Id: 7/24

JTAG

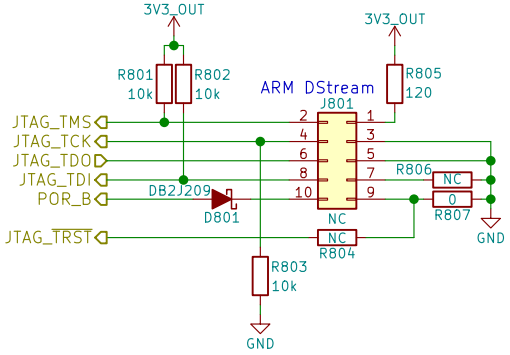

JTAG

Purism

Copyright 2018 GNU GPLv3

eric.kuzmenko@puri.sm
angus.ainslie@puri.sm
nicole.faerber@puri.sm
christian.schilmoeller@puri.sm

Sheet: /JTAG/
File: jtag.sch

Size: A4	Date: 2018-06-18	Rev: v0.1.0
KiCad E.D.A. kicad 4.0.7		Id: 8/24

USB Hub + SDIO Bridge

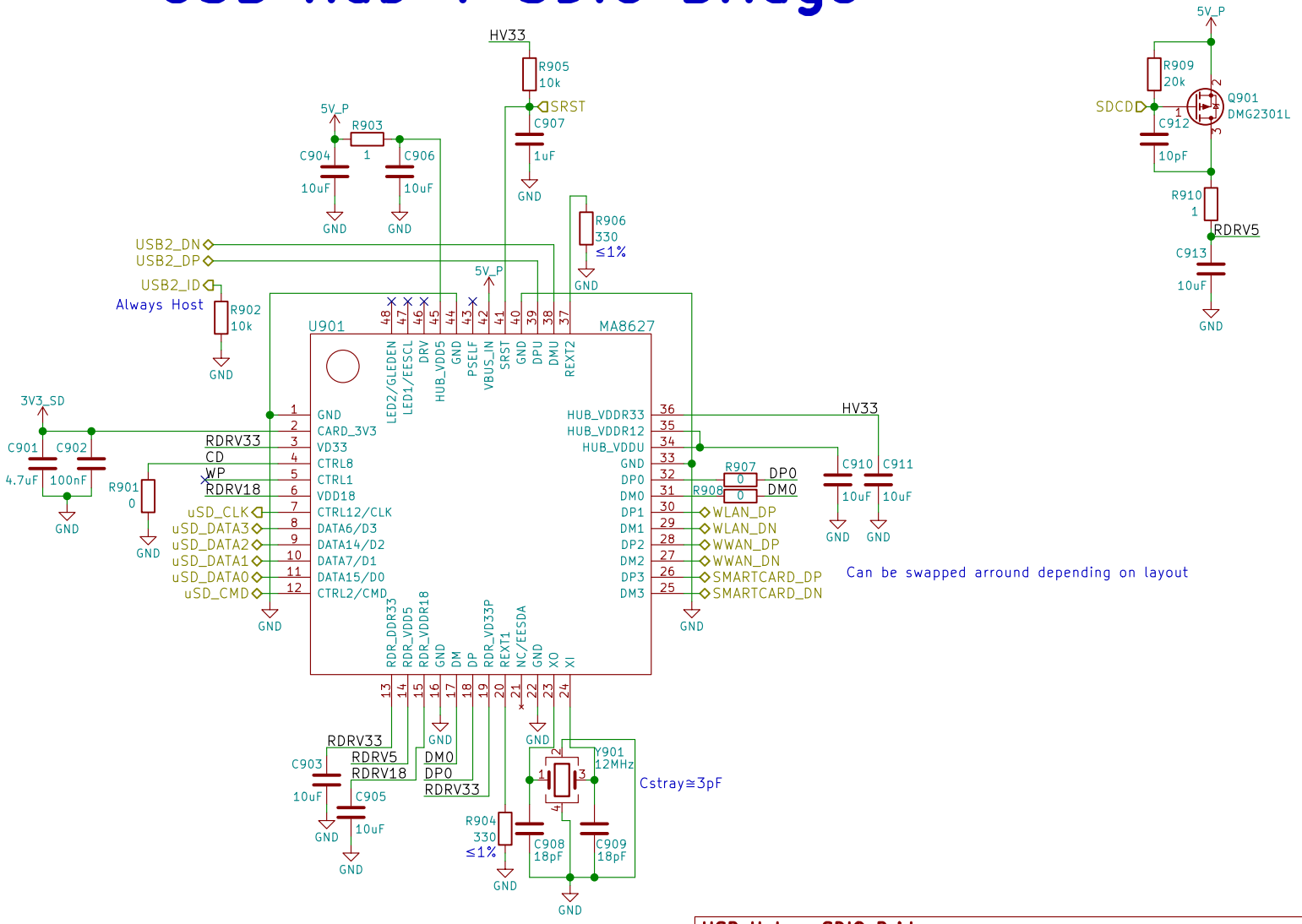

USB Hub + SDIO Bridge		eric.kuzmenko@puri.sm
Purism		angus.ainslie@puri.sm
		nicole.faerber@puri.sm
		christian.schilmoeller@puri.sm
Copyright 2018 GNU GPLv3		
Sheet: /USB Hub + SDIO Bridge/		
File: usb_hub_sdio.sch		
Size: A4	Date: 2018-06-18	**Rev: v0.1.0**
KiCad E.D.A. kicad 4.0.7		Id: 9/24

µSD

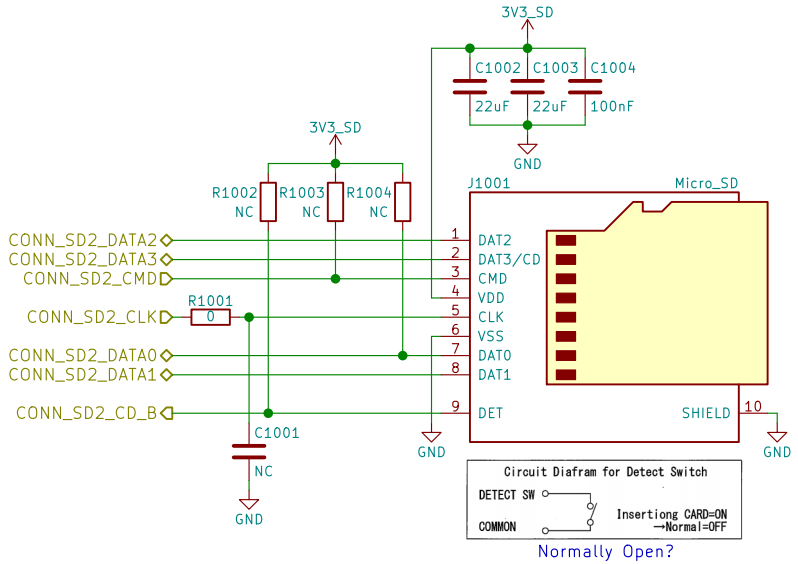

Normally Open?

uSD Card	eric.kuzmenko@puri.sm
Purism	angus.ainslie@puri.sm
	nicole.faerber@puri.sm
	christian.schilmoeller@puri.sm
Copyright 2018 GNU GPLv3	
Sheet: /uSD Card/	
File: sd.sch	
Size: A4 | Date: 2018-06-18	**Rev: v0.1.0**
KiCad E.D.A. kicad 4.0.7	Id: 10/24

MIPI

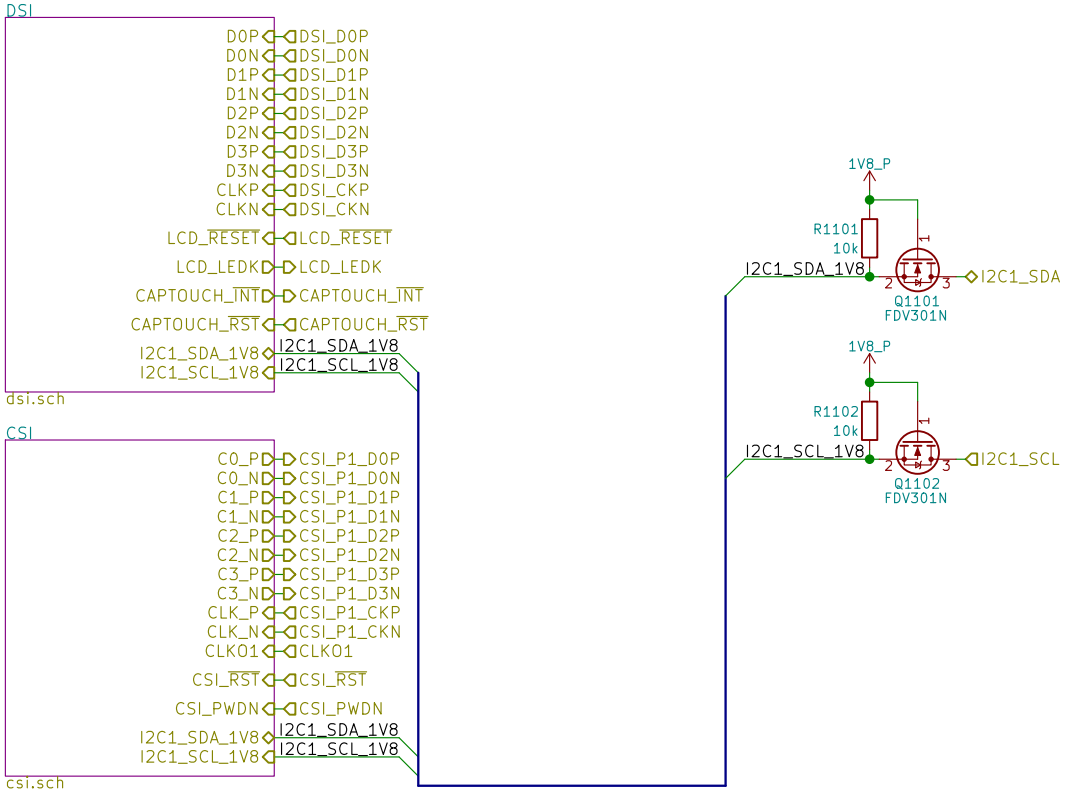

MIPI

Purism

Copyright 2018 GNU GPLv3

eric.kuzmenko@puri.sm
angus.ainslie@puri.sm
nicole.faerber@puri.sm
christian.schilmoeller@puri.sm

Sheet: /MIPI/
File: mipi.sch

Size: A4	Date: 2018-06-18	Rev: v0.1.0
KiCad E.D.A. kicad 4.0.7		Id: 11/24

Display & Touch Controller

LCD PN:
Shenzhen Jinghong Electronics Co., Ltd.
JH057N00900

Note:
No power-up sequence is given in the spec sheet

7-bit Slave Address: 0x5D
(1011 101x)

Read: 0xBB
Write: 0xBA

Cap-Touch Controller IC PN:
Goodix GT5688

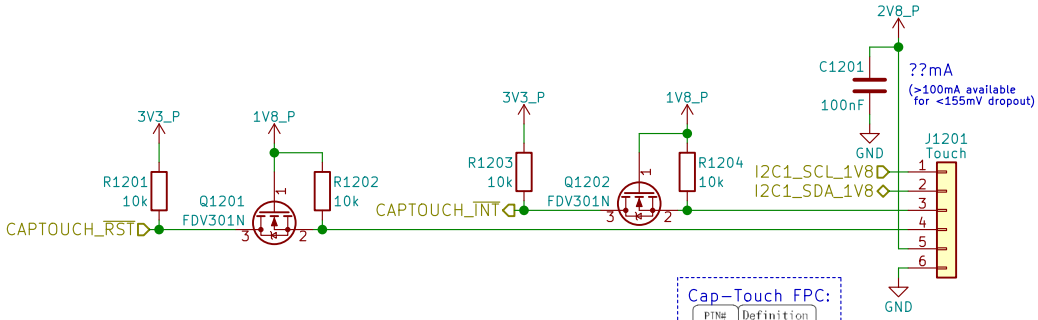

The upper 7 bits are the address,
and bit 0 is used to select read or write.
GT5688 has two slave device addresses to choose from:

INT	7-Bit Address	8-Bit Write Address	8-Bit Read Address
LOW	0x5D	0xBA	0xBB
HIGH	0x14	0x28	0x29

Every time you power on or reset, you need to use the INT pin to set the I2C address:

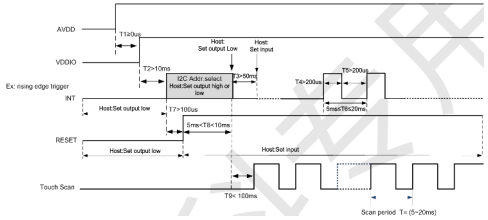

Cap-Touch FPC:

PIN#	Definition
1	SCL
2	SDA
3	INT
4	RESET
5	VDD2.85
6	GND

Front: Back:

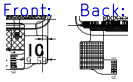

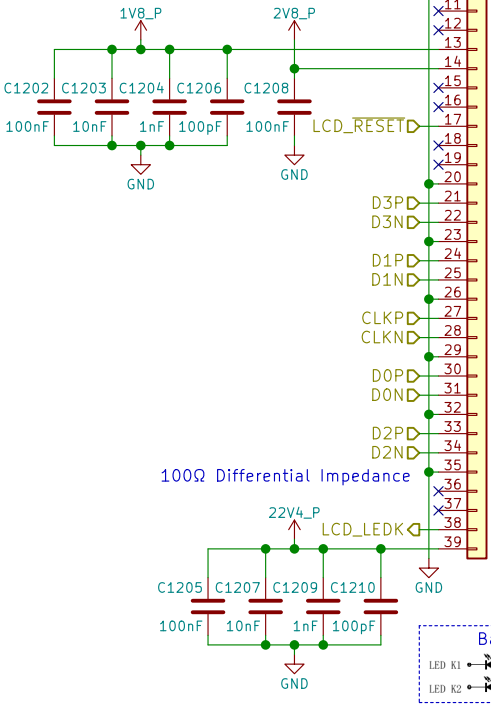

Display_JH057N00900

DISP1201

5,7 ''
RGB
720 x 1440
pixels

FPC6
Touch

FPC39
Display + Backlight

DSI FPC:
Front: Back:

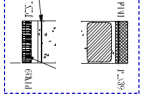

Backlight Array:

MIPI DSI

Purism

Copyright 2018 GNU GPLv3

eric.kuzmenko@puri.sm
angus.ainslie@puri.sm
nicole.faerber@puri.sm
christian.schilmoeller@puri.sm

Sheet: /MIPI/DSI/
File: dsi.sch

Size: A4	Date: 2018-06-18	Rev: v0.1.0
KiCad E.D.A. kicad 4.0.7		Id: 12/24

Camera

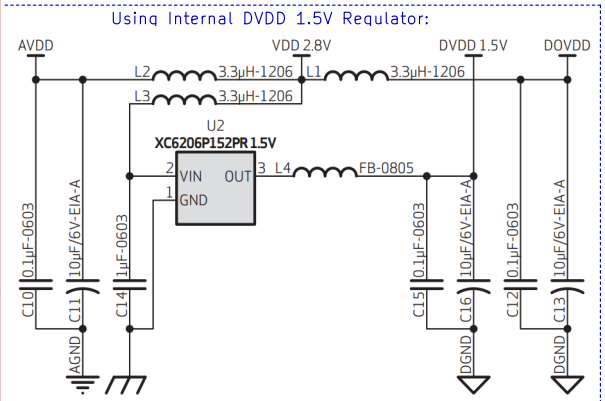

2.7 POWER UP SEQUENCE
Based on the system power configuration (1.8V or 2.8V for I/O power, using external DVDD or internal DVDD, requiring access to the I2C during power up period or not), the power up sequence will differ. If 1.8V is used for I/O power, using the internal DVDD is preferred. If 2.8V is used for I/O power, due to a high voltage drop at the internal DVDD regulator, there is a potential heat issue. Hence, for a 2.8V power system, OmniVision recommends using an external DVDD source. Due to the higher power down current when using an external DVDD source, OmniVision strongly recommends cutting off all powers, including the external DVDD, when the sensor is not in use in the case of 2.8V I/O and external DVDD.

2.7.1 POWER UP WITH INTERNAL DVDD
For powering up with the internal DVDD and I2C access during the power ON period, the following conditions must occur:

1. when DOVDD and AVDD are turned ON, make sure DOVDD becomes stable before AVDD becomes stable
2. PWDN is active high with an asynchronized design (does not need clock)
3. PWDN pin tied to digital ground if it is not controlled.
4. if PWDN pin is controlled as below, for PWDN to go low, power must first become stable (AVDD to PWDN ≥ 5 ms)
5. RESETB is active low with an asynchronized design
6. master clock XVCLK should provide at least 1 ms before host accesses the sensor's registers
7. host can access I2C bus (if shared) during entire period. 20ms after RESETB goes high, host can access the sensor's registers to initialize sensor

figure 2-3 power up timing with internal DVDD

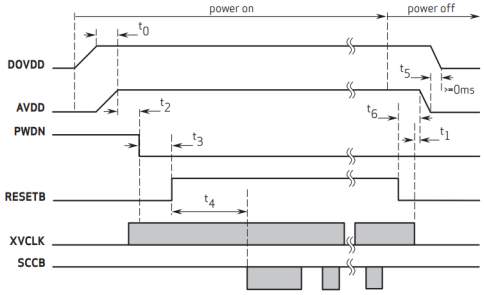

note
t_0 ≥ 0ms, delay from DOVDD stable to AVDD stable, it is recommended to power up AVDD shortly after DOVDD has been powered up
t_1 ≥ 0ms, delay from XVCLK off to AVDD off
t_2 ≥ 5ms, delay from AVDD stable to sensor power up stable, PWDN can be pulled low after this point, XVCLK can be turned on after power on
t_3 ≥ 1ms, delay from sensor power up stable to RESETB pull up
t_4 ≥ 20ms, delay from RESETB pull high to SCCB initialization
t_5 ≥ 0ms, delay from AVDD off to DOVDD off
t_6 ≥ 0ms, delay from RESETB pull low to AVDD off

S640_DS_2_2

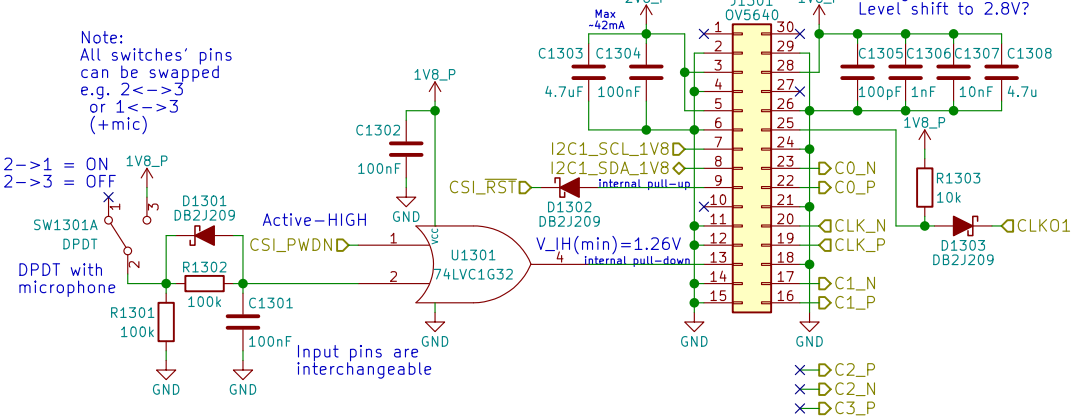

Camera PN:
Truly C08725-B5SA-E

7-bit Slave Address: 0x78
(1111 000x)

Read: 0xF1
Write 0xF0

OV5640 CMOS Image Sensor Datasheet:
https://cdn.sparkfun.com/datasheets/Sensors/LightImaging/OV5640_datasheet.pdf

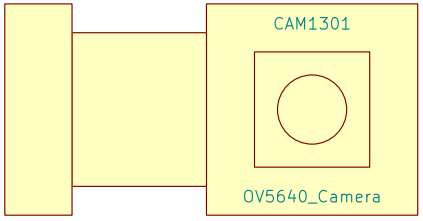

MIPI CSI

Purism

Copyright 2018 GNU GPLv3

eric.kuzmenko@puri.sm
angus.ainslie@puri.sm
nicole.faerber@puri.sm
christian.schilmoeller@puri.sm

Sheet: /MIPI/CSI/
File: csi.sch

Size: A4	Date: 2018-06-18	Rev: v0.1.0
KiCad E.D.A. kicad 4.0.7		Id: 13/24

Buttons & LED

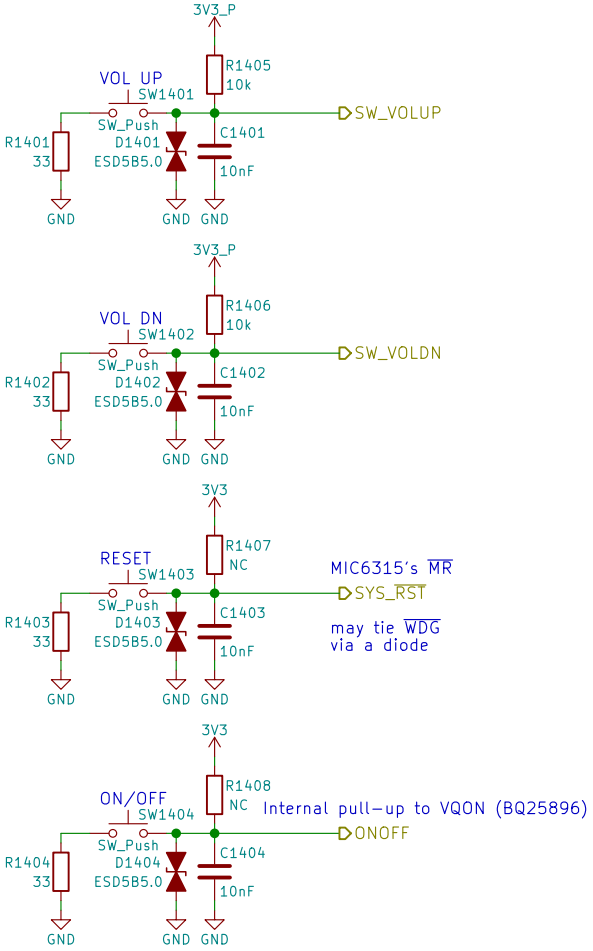

Use PWM2_PWMSAR to set the compare value (duty cycle)
Use PWM2_PWMCR[15:4] to set the PRESCALER (frequency)
Use PWM2_PWMPR to set the top of the counter (frequency)

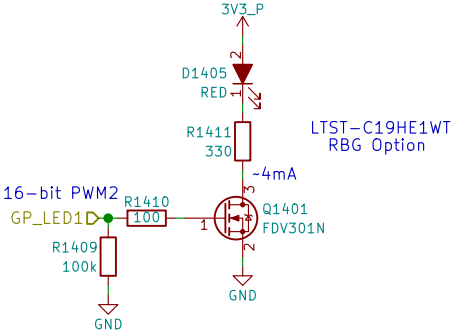

Buttons & LED	eric.kuzmenko@puri.sm angus.ainslie@puri.sm nicole.faerber@puri.sm christian.schilmoeller@puri.sm
Purism	
Copyright 2018 GNU GPLv3	
Sheet: /Buttons & LED/ File: buttons_led.sch	
Size: A4 | Date: 2018-06-18	**Rev: v0.1.0**
KiCad E.D.A. kicad 4.0.7	Id: 14/24

WWAN mPCIe

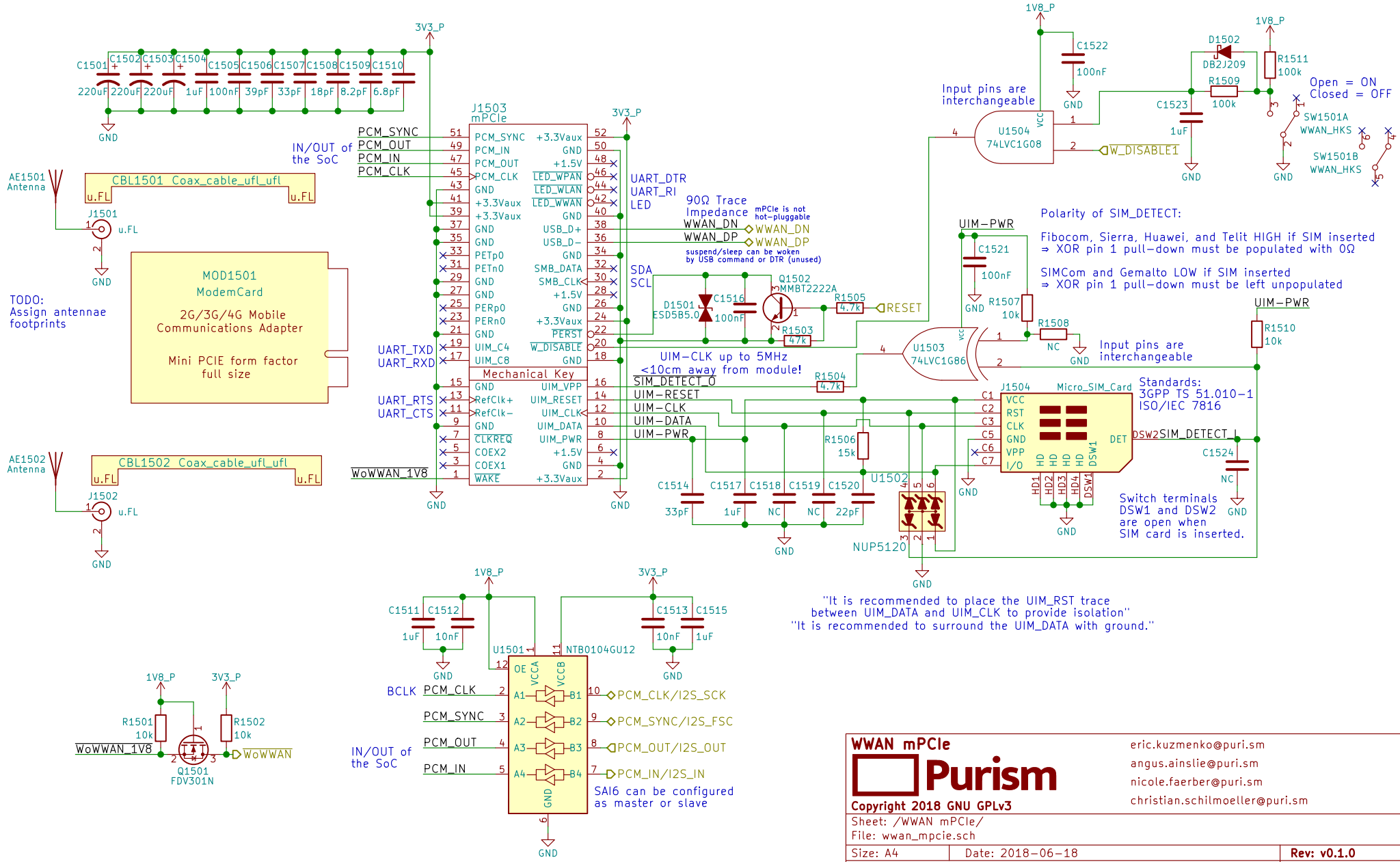

WWAN mPCIe	Purism
Copyright 2018 GNU GPLv3	
Sheet: /WWAN mPCIe/	
File: wwan_mpcie.sch	
Size: A4	Date: 2018-06-18
KiCad E.D.A. kicad 4.0.7	Rev: v0.1.0
	Id: 15/24

eric.kuzmenko@puri.sm
angus.ainslie@puri.sm
nicole.faerber@puri.sm
christian.schilmoeller@puri.sm

Audio

Reference:
http://www.52rd.com/S_txt/2011_3/TXT26685.htm
http://www.sengpielaudio.com/calculator-transferfactor.htm
https://electronics.stackexchange.com/questions/31442/how-can-i-switch-this-audio-jack-using-its-own-mechanical-switches-without-cre
(Nit6 does the same)
+Zener diode to protect against ranges outside of -0.9V to 3.3V

dB specs in datasheet is a unit of power gain (not dBu or VU)
with respect to the DAC's unattenuated output

"HP Output - 62.5mW max, 1.02kHz sine into 16Ω load at 3.3 V"
⇒ $(1V)^2/(16Ω)=62.5mW$
∴ Vrms=1V ⇒ Vp(amplitude)=1.414V
∴ Irms(max)=62.5mA

If HP_DET is HIGH for >100ms then HPs are present

S/E button on earbud headsets
shorts the mic for key function

Could use FSA8008 to detect mic

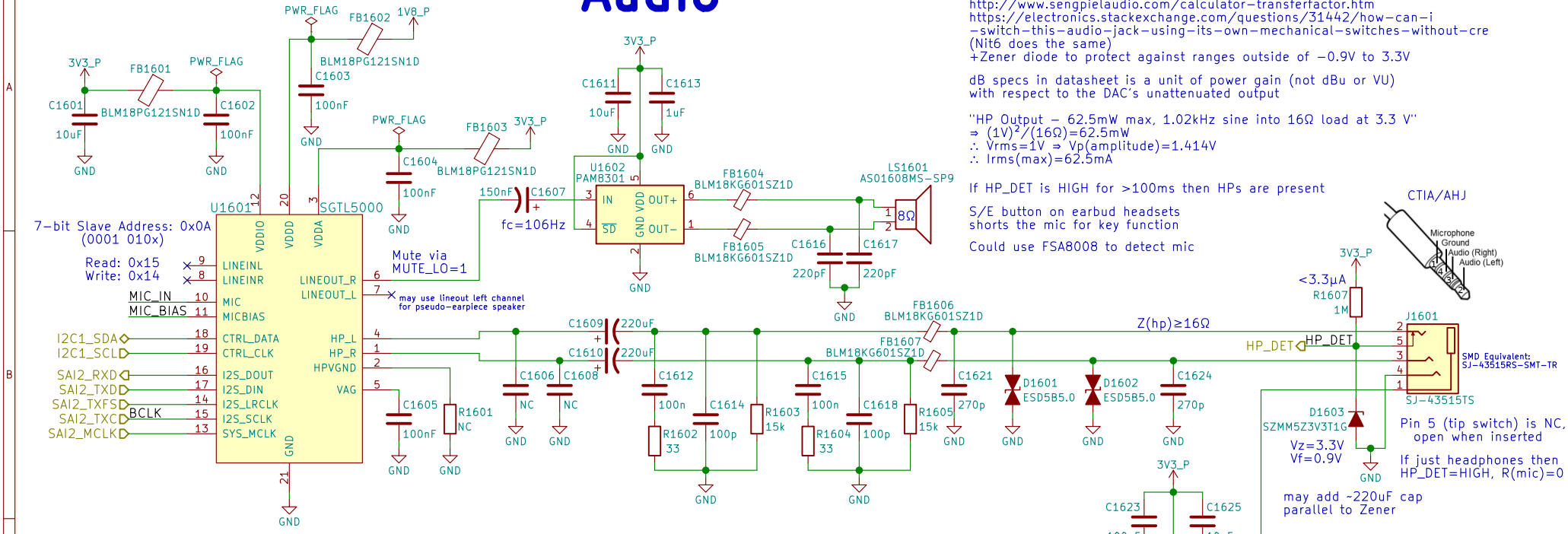

Built-In Speaker's Frequency Response:

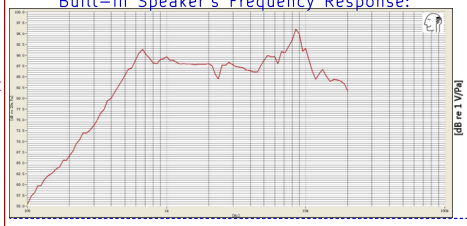

Built-In Mic's Frequency Response:

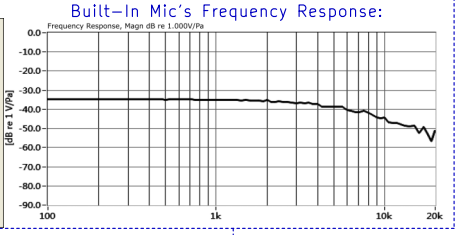

Simulation of HP_DET @ 1kHz output without HP jack inserted:

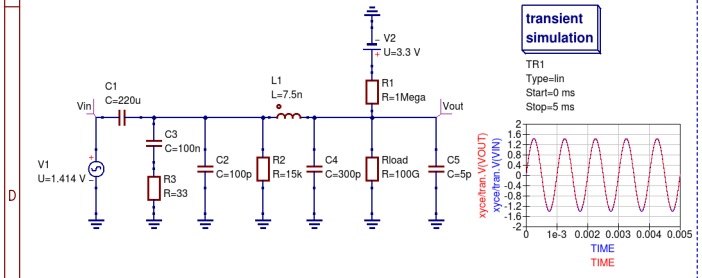

LCR Measurements:

Earbud Microphone: @1kHz	Headset Speaker: @1kHz	Earbud Speaker: @1kHz
Ls = 3.844mH	Ls = 244.4uH	Ls = 25.2uH
Lp = 15.757H	Lp = 141.99mH	Lp = 311.0mH
Cs = 6.583uF	Cs = 103.6uF	Cs = 1.0mF
Cp = 1612.8pF	Cp = 178.77nF	Cp = 81.95nF
Rs = 1.5465kOhms	Rs = 36.860hms	Rs = 17.0300hms
Rp = 1.5478kOhms	Rp = 36.860hms	Rp = 17.0340hms
θ = -0.8deg	θ = -2.3deg	θ = 0.5deg

Audio

Purism

Copyright 2018 GNU GPLv3

eric.kuzmenko@puri.sm
angus.ainslie@puri.sm
nicole.faerber@puri.sm
christian.schilmoeller@puri.sm

Sheet: /Audio/
File: audio.sch

Size: A4	Date: 2018-06-18	Rev: v0.1.0
KiCad E.D.A. kicad 4.0.7		Id: 16/24

RGMII 10/100/1000 Ethernet

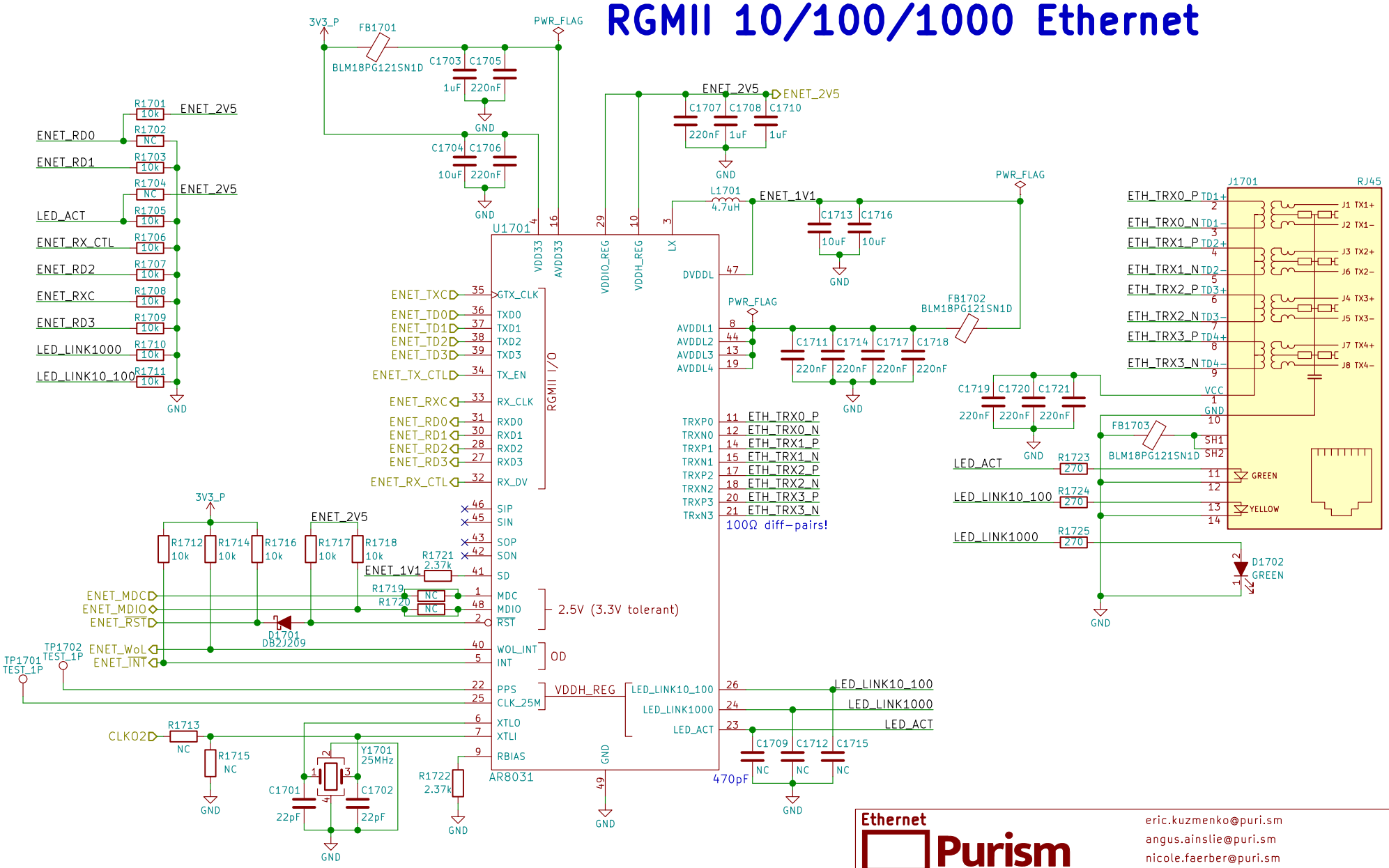

Ethernet

Purism

Copyright 2018 GNU GPLv3

eric.kuzmenko@puri.sm
angus.ainslie@puri.sm
nicole.faerber@puri.sm
christian.schilmoeller@puri.sm

Sheet: /Ethernet/
File: ethernet.sch

Size: A4 | Date: 2018-06-18 | Rev: v0.1.0

KiCad E.D.A. kicad 4.0.7 | Id: 17/24

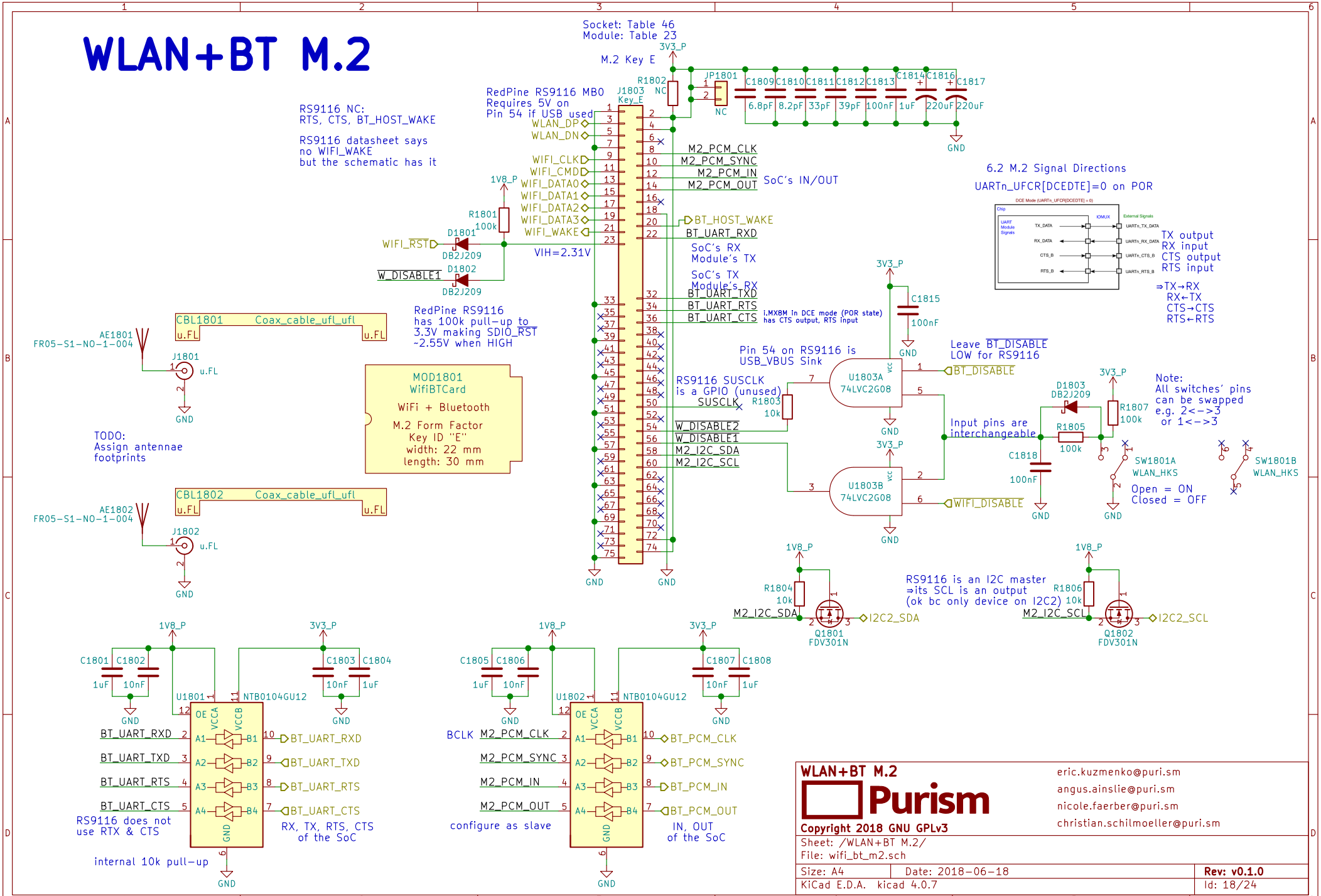
WLAN+BT M.2
Socket: Table 46
Module: Table 23
M.2 Key E
RedPine RS9116 MB0
Requires 5V on
Pin 54 if USB used
RS9116 NC:
RTS, CTS, BT_HOST_WAKE
RS9116 datasheet says
no WIFI_WAKE
but the schematic has it
WLAN_DP
WLAN_DN
WIFI_CLK
WIFI_CMD
WIFI_DATA0
WIFI_DATA1
WIFI_DATA2
WIFI_DATA3
WIFI_WAKE
M2_PCM_CLK
M2_PCM_SYNC
M2_PCM_IN
M2_PCM_OUT
SoC's IN/OUT
BT_HOST_WAKE
BT_UART_RXD
SoC's RX
Module's TX
SoC's TX
Module's RX
BT_UART_TXD
BT_UART_RTS
BT_UART_CTS
i.MX8M in DCE mode (POR state)
has CTS output, RTS input
VIH=2.31V
WIFI_RST
W_DISABLE1
RedPine RS9116
has 100k pull-up to
3.3V making SDIO_RST
~2.55V when HIGH
6.2 M.2 Signal Directions
UARTn_UFCR[DCEDTE]=0 on POR
TX output
RX input
CTS output
RTS input
⇒TX→RX
RX←TX
CTS→CTS
RTS←RTS
Pin 54 on RS9116 is
USB_VBUS Sink
Leave BT_DISABLE
LOW for RS9116
BT_DISABLE
RS9116 SUSCLK
is a GPIO (unused)
SUSCLK
W_DISABLE2
W_DISABLE1
M2_I2C_SDA
M2_I2C_SCL
Input pins are
interchangeable
Note:
All switches' pins
can be swapped
e.g. 2<->3
or 1<->3
SW1801A
WLAN_HKS
Open = ON
Closed = OFF
SW1801B
WLAN_HKS
CBL1801
Coax_cable_ufl_ufl
AE1801
FR05-S1-NO-1-004
J1801
CBL1802
Coax_cable_ufl_ufl
AE1802
FR05-S1-NO-1-004
J1802
TODO:
Assign antennae
footprints
MOD1801
WifiBTCard
WiFi + Bluetooth
M.2 Form Factor
Key ID "E"
width: 22 mm
length: 30 mm
RS9116 is an I2C master
⇒its SCL is an output
(ok bc only device on I2C2)
M2_I2C_SDA
M2_I2C_SCL
Q1801
FDV301N
Q1802
FDV301N
U1801
NTB0104GU12
U1802
NTB0104GU12
BT_UART_RXD
BT_UART_TXD
BT_UART_RTS
BT_UART_CTS
RS9116 does not
use RTX & CTS
RX, TX, RTS, CTS
of the SoC
internal 10k pull-up
BCLK
M2_PCM_CLK
M2_PCM_SYNC
M2_PCM_IN
M2_PCM_OUT
configure as slave
BT_PCM_CLK
BT_PCM_SYNC
BT_PCM_IN
BT_PCM_OUT
IN, OUT
of the SoC
WLAN+BT M.2
Purism
Copyright 2018 GNU GPLv3
eric.kuzmenko@puri.sm
angus.ainslie@puri.sm
nicole.faerber@puri.sm
christian.schilmoeller@puri.sm
Sheet: /WLAN+BT M.2/
File: wifi_bt_m2.sch
Size: A4
Date: 2018-06-18
Rev: v0.1.0
KiCad E.D.A. kicad 4.0.7
Id: 18/24

TUSB1046 can be used for DP over USB-C

HDMI

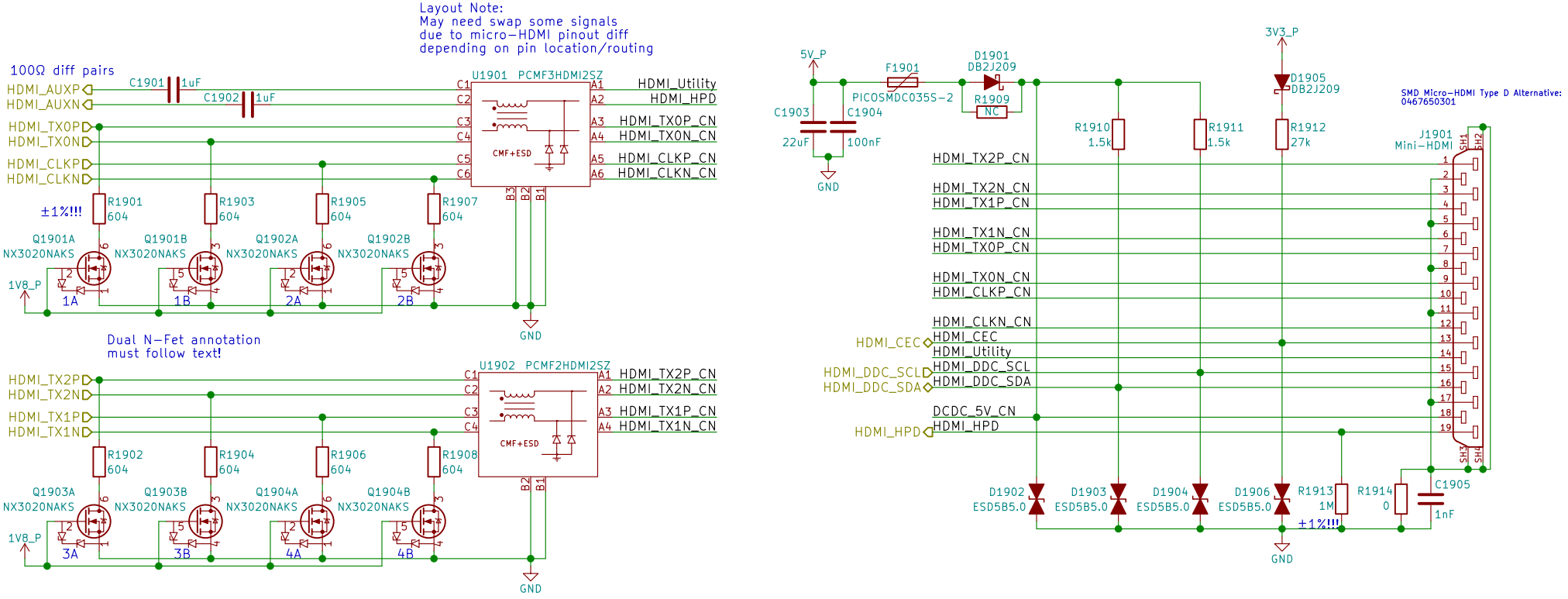

HDMI		eric.kuzmenko@puri.sm
Purism		angus.ainslie@puri.sm
		nicole.faerber@puri.sm
		christian.schilmoeller@puri.sm
Copyright 2018 GNU GPLv3		
Sheet: /HDMI/		
File: hdmi.sch		
Size: A4	Date: 2018-06-18	Rev: v0.1.0
KiCad E.D.A. kicad 4.0.7		Id: 19/24

Sensors

Proximity & Ambient Light

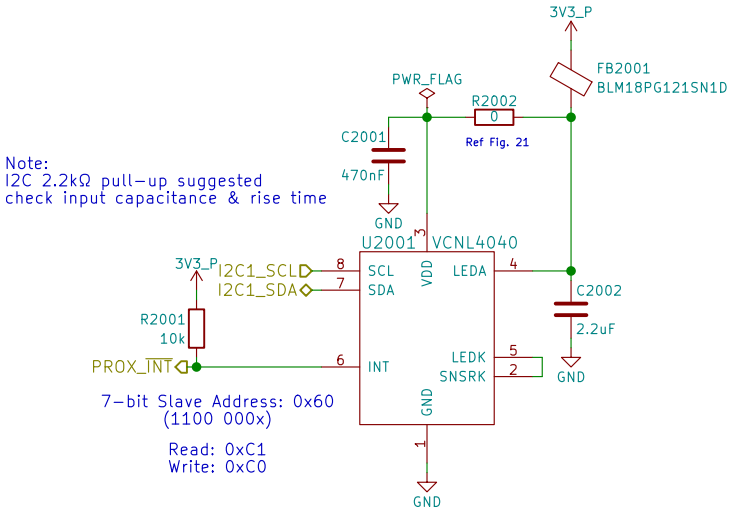

Reference:
https://www.vishay.com/docs/84307/designingvcnl4040.pdf
http://www.vishay.com/docs/84931/vcnl4040sensorboardfiles.pdf

9-Axis IMU

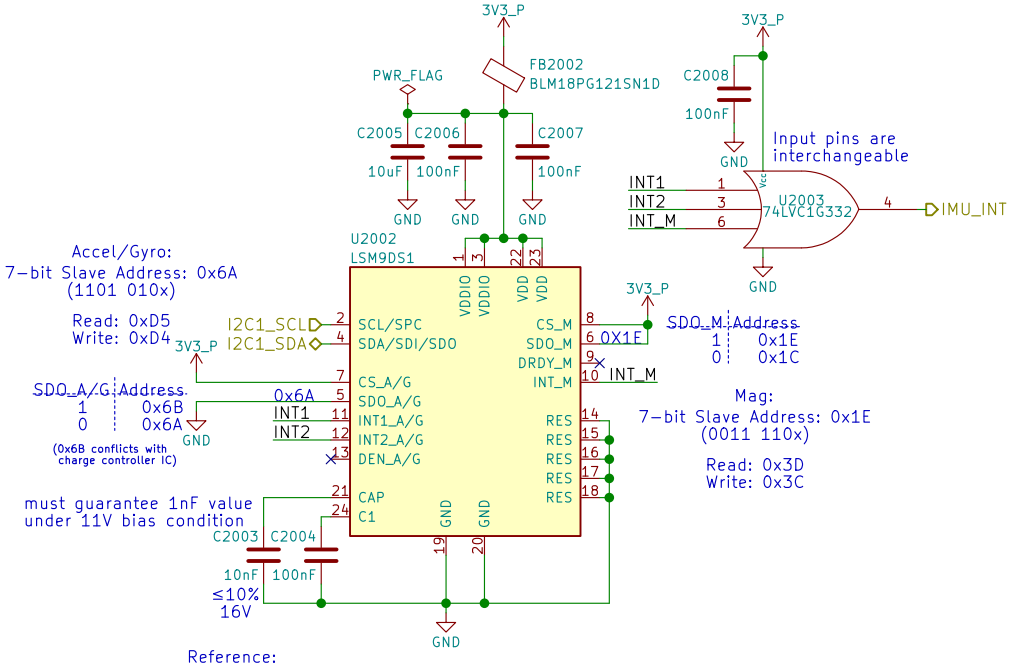

Reference:
http://www.st.com/en/evaluation-tools/steval-mki159v1.html

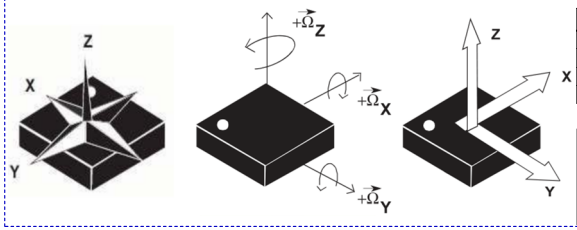

Table 19. Accelerometer and gyroscope SAD+Read/Write patterns

Command	SAD[6:1]	SAD[0] = SA0	R/W	SAD+R/W
Read	110101	0	1	11010101 (D5h)
Write	110101	0	0	11010100 (D4h)
Read	110101	1	1	11010111 (D7h)
Write	110101	1	0	11010110 (D6h)

Table 20. Magnetic sensor SAD+Read/Write patterns

Command	SAD[6:2]	SAD[1] = SDO/SA1	SAD[0]	R/W	SAD+R/W
Read	00111	0	0	1	00111001 (39h)
Write	00111	0	0	0	00111000 (38h)
Read	00111	1	0	1	00111101 (3Dh)
Write	00111	1	0	0	00111100 (3Ch)

Sensors

Purism

eric.kuzmenko@puri.sm
angus.ainslie@puri.sm
nicole.faerber@puri.sm
christian.schilmoeller@puri.sm

Copyright 2018 GNU GPLv3

Sheet: /Sensors/
File: sensors.sch

Size: A4 | Date: 2018-06-18 | Rev: v0.1.0

KiCad E.D.A. kicad 4.0.7 | Id: 20/24

SPI NOR Flash

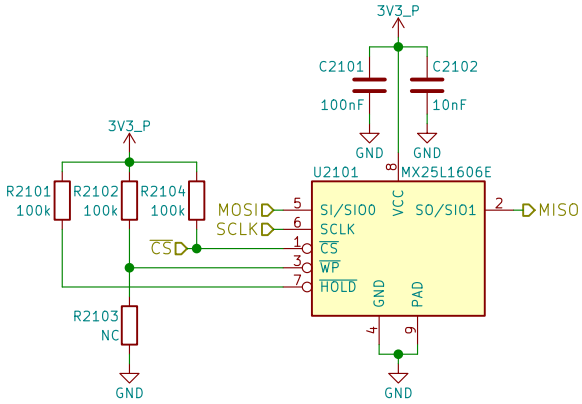

SPI NOR Flash		eric.kuzmenko@puri.sm angus.ainslie@puri.sm nicole.faerber@puri.sm christian.schilmoeller@puri.sm
Purism		
Copyright 2018 GNU GPLv3		
Sheet: /SPI Flash/ File: flash.sch		
Size: A4	Date: 2018-06-18	**Rev: v0.1.0**
KiCad E.D.A. kicad 4.0.7		Id: 21/24

Smart Card

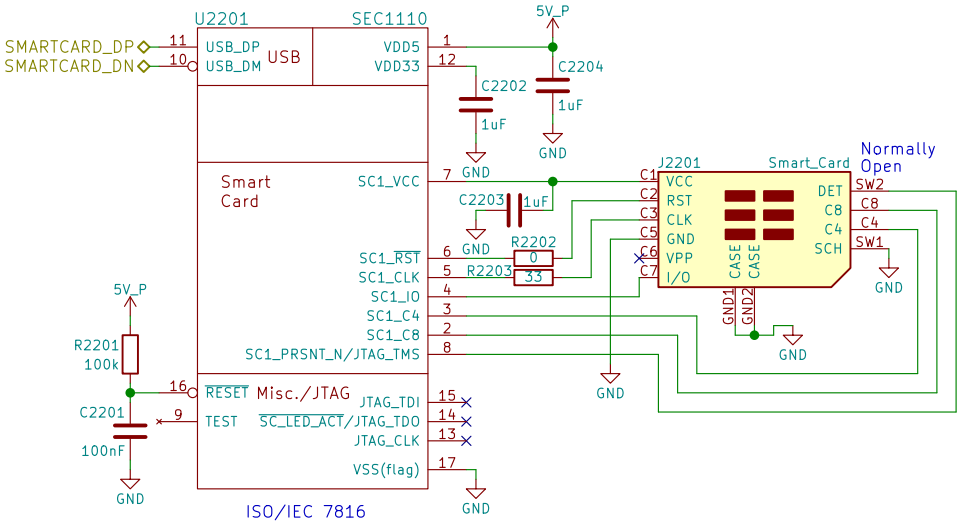

Reference:
http://www.microchip.com/DevelopmentTools/ProductDetails.aspx?PartNO=EVB-SEC1110

Smart Card

Purism

Copyright 2018 GNU GPLv3

eric.kuzmenko@puri.sm
angus.ainslie@puri.sm
nicole.faerber@puri.sm
christian.schilmoeller@puri.sm

Sheet: /Smart Card/
File: smartcard.sch

Size: A4	Date: 2018-06-18	**Rev: v0.1.0**
KiCad E.D.A. kicad 4.0.7		Id: 22/24

GNSS

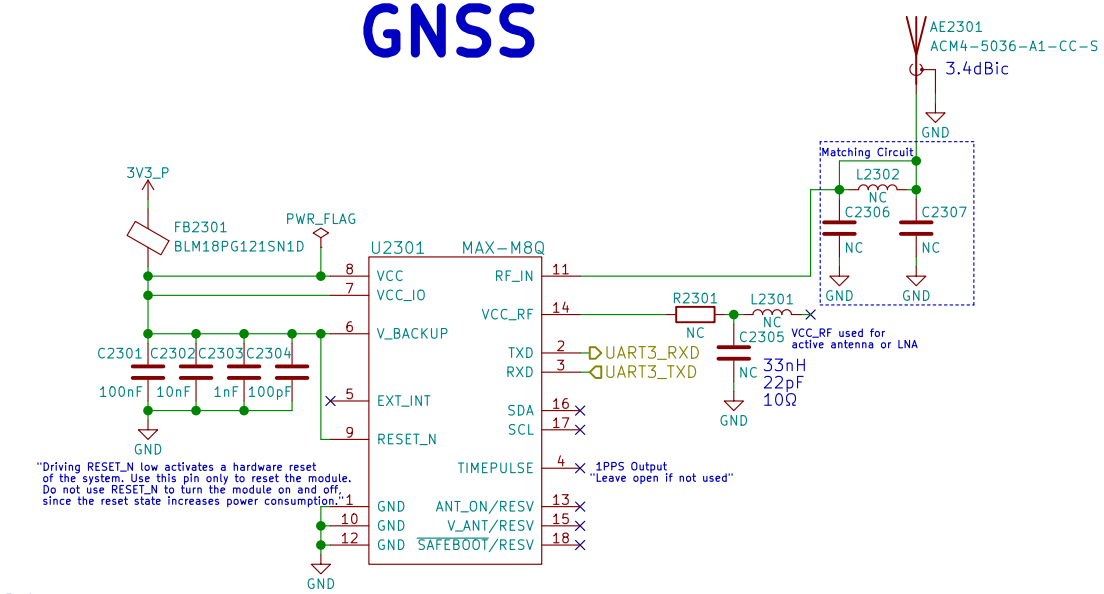

References:
https://www.u-blox.com/sites/default/files/MAX-M8_HardwareIntegrationManual_%28UBX-13004876%29.pdf
https://www.u-blox.com/sites/default/files/MAX-8-M8-FW3_HardwareIntegrationManual_%28UBX-15030059%29.pdf

GNSS

Purism

Copyright 2018 GNU GPLv3

eric.kuzmenko@puri.sm
angus.ainslie@puri.sm
nicole.faerber@puri.sm
christian.schilmoeller@puri.sm

Sheet: /GNSS/
File: gnss.sch

Size: A4 | Date: 2018-06-18 | **Rev: v0.1.0**
KiCad E.D.A. kicad 4.0.7 | Id: 23/24

Haptic Motor

PWM pins occupied:
GPIO1_IO01 – LCD Backlight
GPIO1_IO13 – LED
GPIO1_IO14 – Ethernet (CLKO_25MHz)
GPIO1_IO15 – CSI (CLKO2)

PWM needed?
Only needs to be toggled
ON 1 sec, OFF 1 sec (0.5Hz)

Can MUX as either
GPIO or PWM2
swapping with LED

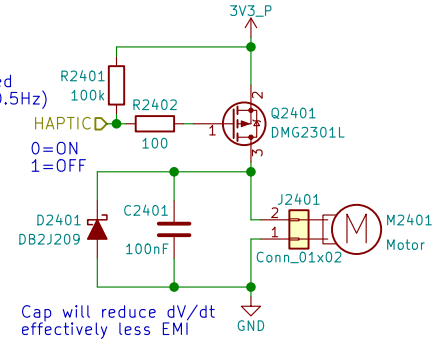

Cap will reduce dV/dt
effectively less EMI

When the motor is off
both terminals are at GND

Motor will have wire leads
with a 2-pin Molex or Boom Precision
connector installed (by request)

Metal housing is floating
thick adhesive layer underneath
(not connected to either pin)

Haptic/Vibration Motor

Purism

Copyright 2018 GNU GPLv3

eric.kuzmenko@puri.sm
angus.ainslie@puri.sm
nicole.faerber@puri.sm
christian.schilmoeller@puri.sm

Sheet: /Haptic Motor/
File: haptic.sch

Size: A4	Date: 2018-06-18	**Rev: v0.1.0**
KiCad E.D.A. kicad 4.0.7		Id: 24/24