V06

1, Del NFC PN7150, Add CON24, UART1 for GNSS or Debug, SPI2 to CON24, UART2 for BT
2, Move SMC_BOOT0 to Page 22 , TP6.
3, HKs Add Pull-up Resistor , And add Read state GPIO.
4, TYPE-C U27 LSX no connect.
5, Correct Y2, Y3 Connect.
6, Add Voltage Test Point , >40 point
7, Add SIM DET D6.
8, CAMERA Modify. Add LDO for DVDD 1.2 and 1.05.
9, TFT con Modify.
10, STM32 PA10 NC. UART add Pull-up R108, R135

V07

1, UART1 to LSX, UART2 to GNSS, UART4 to bt, SPI1 to CON24
2, U329 19PIN add Pull-up R229 .

V08

1, UART2 to LSX
2, HW state IO add resister. R48, R66, R145
3, 4G, WIFI ant CON add Debug L,C
4, Add shielding Case Hold.
5, DEL F12, Modified IO U329 for L9 layer to GND.
6, INT_M/A/G, NFC_EN, NFC_IRQ modified IO to E1 for L2 to GND
7, ADD R232

V09

1, AUX_P , AUX_N swapped.
2, Add R236.
3, Del R153
4, LED_G to 8M D3 pin. NFC_IRQ to 8M E1 pin, INT_M/A/G to 8M L4 pin.
5, R122,R58 to 27K, R123 to 47K.
6, 4G used SAI6. ADD u5

V091

1, U5 8pin to SAI1_TXD5, 9pin to SAI1_RXD5.
2, ADD U7 for CAM_AFVDD, 2.8V 120mA。
3, U2 modified USB2642

V092

1, BOOT Resistor Modified.
2, EMMC 32G.
3, U3 NC.
4, PWM IO modify. MOTO E6, PMIC_5V T7, LED_B K6.

V093

1, R830 NC, R811 10k.

V094

1, BAT CON Modified for 1000 times.
2, ADD L66 L67

V095

1, R115 Modified to 200.

V096

1, ADD R153 for TPS65983B Slave.
2, Modified LM36922 to I2C3, J10 to I2C4.

V097

0, CHG_STATUS_B connect Red LED.
1, Add N-mosfet Q8 on SD2_NCD.
2, TPS65982 LDO_1V8D Connected BUSPOWERZ.
3, VDD_3V3 add 4x22uf C231....
4, VSYS_3V4_4V3 add 7x22uf C281....
5, U27 TPS65982 F2 UART_RX 100k R223 connect GND.
6, Add NET BT_WAKE
7, AUDIO_POWER_KEY connect Q2 PIN1.
8, ADD U68 NTSX2102
9, BOOT_CFG PU to NVCC_SNVS_3V3
10, R176 PU to NVCC_SNVS_3V3
11, R104 10 value.
12, R82 0402 0.1%
13, R934 100K
14, U2 USB2642 27,28 connect GND, 26 connect VDD.
15, ADD Q9, Modified WIFI_REG_ON, BT_REG_ON.
16, ADD R238 UART2_RXD PU USB_PD_LDO3V3
17, ADD Q10, R239, R240,R241
18, Add TYPEC_HRESET,
19, R42 1M ,
20, U147 connect TPS65982
21, SW3,SW5,SW7 2-3PIN
22, J50 modified
23, J12 modifed

V098

1, 0 ohm jumpers SPI.
2, C181 NC
3,main board usb 2.0 connector
4,PFET pull up UART2_RX
5,red LED powered by VSYS
6, TPS65982 I2C2 10K pull-ups
7, TPS65982 remove_usb 2.0
8, TP34 connect USB_VBUS for test
9, SPI MISO ADD pull-up 10K
10, ADD u50,U51 , C335,C336

V099

(11) Battery connector (J20): changed to P / N: BA32-111203-01 3pin
(12) Cancel J50 (flash holder) and move the flash to the rear camera FPC
(13) change J22 to P / N: OK-06F034-04
(14) J9 smartcard (80500122) is changed to SA070112150-105
(15)Headphone socket (J2) changed to JA-36A1-111
(16)
(17) SIM +TF Card changed to SA2101110135-103-01, TF_NCD and 4G_ SIM_ (Change to plastic tray)
(18)R166, R109 changed to 0R
(19)Connect SMC_ Boot0 to D7 pin of imx8mq
(20)R41(47K) changed to 0R
(21)ADD CLOCK Crystal(Y1)VALUE:32.768K 10pF ±20ppm
(22)Use TLV75801PDBVR instead of LCDL015MR for U21 and U37
Make R33=11.8kΩ
Make R70=9.09kΩ
Remove R234 (0Ω)
(23) add a test point to pin C2 of the TPS65982 (U27's GPIO1_CFG0)
(24) add inverter (Q12)
(25) ADD C339
(26)ADD C351/352/356/388/396/397/398/399/400/406/407/408/409/410/411/412/413/414/415/416/417//418/419/420/421/422/423/424/427/4287/429/430/431/432/433 1UF 6.3V 0201
(27) C434 C435 NC
(28) ADD C436/437/439/440/441/442/443/444 0201/1UF
ADD: C448 C449 C450 22UF 0603 6.3V
(29) R209 R210 changed to 1.5K
(30) DEL R1903
(31) ADD: LNA BGA725L6 & SAW filter B39162B4327P810. etc
(32)Bring USB_PD_LDO3V3 to pin 23 of J12 on the main board:
(33)Remove TVS11, TVS30, TVS31, and TVS32 on the main board:
(34) C343/C377 changed to 220PF
(35)change the connection of PMIC(U1) Pin49
(36)Change U101 MIPI_ VDDHA3 connection
(37) R63/ R64,/R100/ R103 NC.
(38) C379 and C380 = 100nF (0.1uF)
(39) ADD R251/R252 1M
(40) ADD :Y2 (32.768K)/C332/C333(6.8Pf)
(41) ADD :R253/NC
(42) ADD R254/0 OHM
(43) Add connection between J4's pin12 and U101's G6
(44) add R255/0 ohm
(45) C87/C256 changed to 56pF
(46) ADD C451/C454 56pF

GNU GPLv3+
Copyright 2020
Purism SPC

Purism		
Drawing Title: Librem 5		
Page Title: VER note		
Rev: v1.0.0	Date:	Design by:
		Sheet 1 of 21

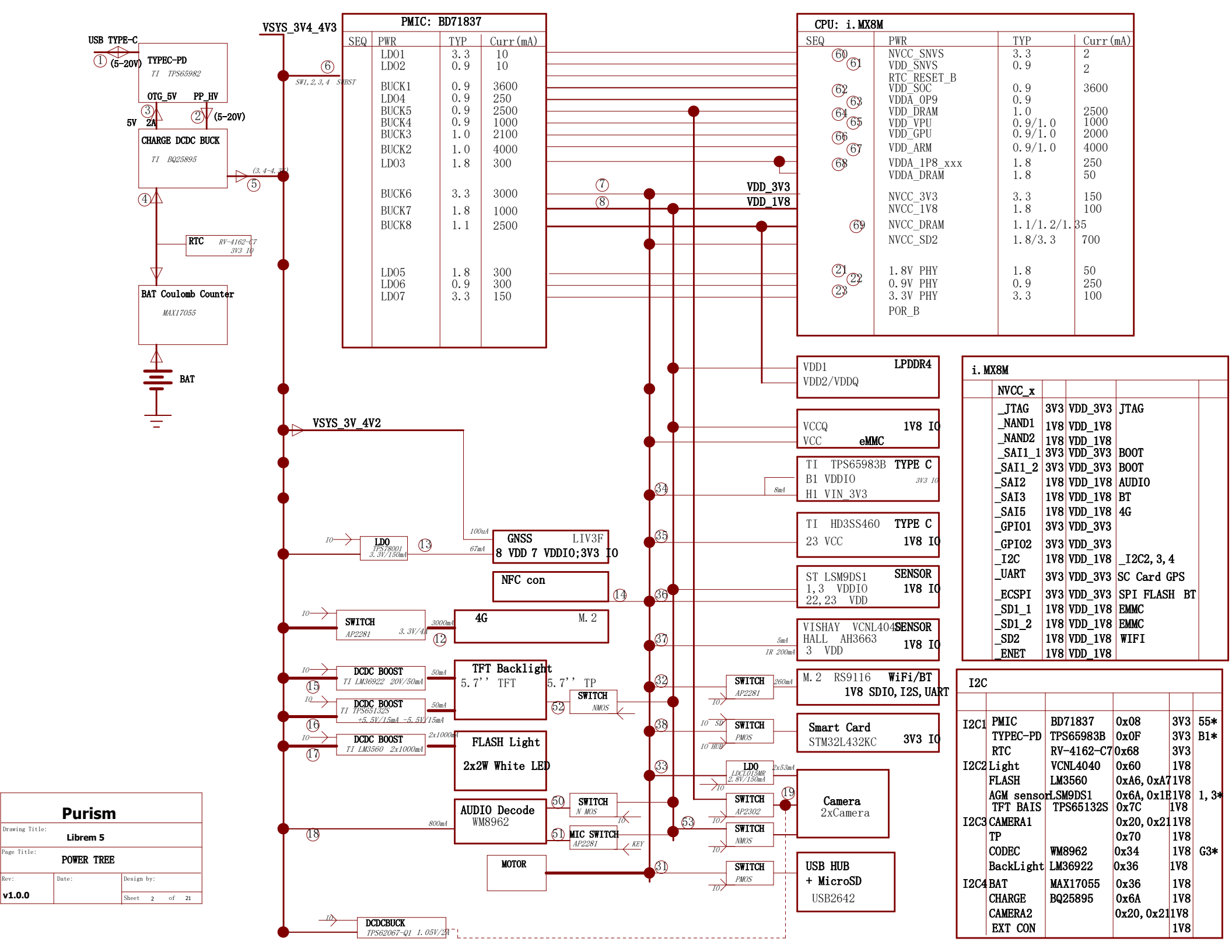
USB TYPE-C
(5-20V)
TYPEC-PD
TI TPS65982
OTG_5V
PP_HV
5V 2A
(5-20V)
CHARGE DCDC BUCK
TI BQ25895
RTC
RV-4162-C7
3V3 IO
BAT Coulomb Counter
MAX17055
BAT
VSYS_3V4_4V3
SW1,2,3,4 SWBST
VSYS_3V_4V2
PMIC: BD71837
SEQ PWR TYP Curr(mA)
LDO1 3.3 10
LDO2 0.9 10
BUCK1 0.9 3600
LDO4 0.9 250
BUCK5 0.9 2500
BUCK4 0.9 1000
BUCK3 1.0 2100
BUCK2 1.0 4000
LDO3 1.8 300
BUCK6 3.3 3000
BUCK7 1.8 1000
BUCK8 1.1 2500
LDO5 1.8 300
LDO6 0.9 300
LDO7 3.3 150
CPU: i.MX8M
SEQ PWR TYP Curr(mA)
NVCC_SNVS 3.3 2
VDD_SNVS 0.9 2
RTC_RESET_B
VDD_SOC 0.9 3600
VDDA_0P9 0.9
VDD_DRAM 1.0 2500
VDD_VPU 0.9/1.0 1000
VDD_GPU 0.9/1.0 2000
VDD_ARM 0.9/1.0 4000
VDDA_1P8_xxx 1.8 250
VDDA_DRAM 1.8 50
NVCC_3V3 3.3 150
NVCC_1V8 1.8 100
NVCC_DRAM 1.1/1.2/1.35
NVCC_SD2 1.8/3.3 700
1.8V PHY 1.8 50
0.9V PHY 0.9 250
3.3V PHY 3.3 100
POR_B
VDD_3V3
VDD_1V8
VDD1 LPDDR4
VDD2/VDDQ
VCCQ 1V8 IO
VCC eMMC
TI TPS65983B TYPE C
B1 VDDIO 3V3 IO
H1 VIN_3V3
8mA
TI HD3SS460 TYPE C
23 VCC 1V8 IO
ST LSM9DS1 SENSOR
1,3 VDDIO 1V8 IO
22,23 VDD
VISHAY VCNL4040 SENSOR
HALL AH3663 1V8 IO
3 VDD
5mA
IR 200mA
M.2 RS9116 WiFi/BT
1V8 SDIO,I2S,UART
Smart Card
STM32L432KC 3V3 IO
USB HUB
+ MicroSD
USB2642
Camera
2xCamera
LDO
TPS78001
3.3V/150mA
100uA
67mA
GNSS LIV3F
8 VDD 7 VDDIO;3V3 IO
NFC con
SWITCH
AP2281
3.3V/4A
3000mA
4G M.2
DCDC BOOST
TI LM36922 20V/50mA
50mA
TFT Backlight
5.7'' TFT
5.7'' TP
DCDC BOOST
TI TPS65132S
+5.5V/15mA -5.5V/15mA
50mA
SWITCH
NMOS
DCDC BOOST
TI LM3560 2x1000mA
2x1000mA
FLASH Light
2x2W White LED
AUDIO Decode
WM8962
800mA
SWITCH
N MOS
MIC SWITCH
AP2281
KEY
MOTOR
SWITCH
AP2281
260mA
SWITCH
PMOS
SWITCH
AP2302
SWITCH
NMOS
SWITCH
PMOS
LDO
LDCL015MR
2.8V/150mA
2x53mA
DCDCBUCK
TPS62067-Q1 1.05V/2A
i.MX8M
NVCC_x
_JTAG 3V3 VDD_3V3 JTAG
_NAND1 1V8 VDD_1V8
_NAND2 1V8 VDD_1V8
_SAI1_1 3V3 VDD_3V3 BOOT
_SAI1_2 3V3 VDD_3V3 BOOT
_SAI2 1V8 VDD_1V8 AUDIO
_SAI3 1V8 VDD_1V8 BT
_SAI5 1V8 VDD_1V8 4G
_GPIO1 3V3 VDD_3V3
_GPIO2 3V3 VDD_3V3
_I2C 1V8 VDD_1V8 _I2C2,3,4
_UART 3V3 VDD_3V3 SC Card GPS
_ECSPI 3V3 VDD_3V3 SPI FLASH BT
_SD1_1 1V8 VDD_1V8 EMMC
_SD1_2 1V8 VDD_1V8 EMMC
_SD2 1V8 VDD_1V8 WIFI
_ENET 1V8 VDD_1V8
I2C
I2C1 PMIC BD71837 0x08 3V3 55*
TYPEC-PD TPS65983B 0x0F 3V3 B1*
RTC RV-4162-C7 0x68 3V3
I2C2 Light VCNL4040 0x60 1V8
FLASH LM3560 0xA6,0xA7 1V8
AGM sensor LSM9DS1 0x6A,0x1E 1V8 1,3*
TFT BAIS TPS65132S 0x7C 1V8
I2C3 CAMERA1 0x20,0x21 1V8
TP 0x70 1V8
CODEC WM8962 0x34 1V8 G3*
BackLight LM36922 0x36 1V8
I2C4 BAT MAX17055 0x36 1V8
CHARGE BQ25895 0x6A 1V8
CAMERA2 0x20,0x21 1V8
EXT CON 1V8
Purism
Drawing Title: Librem 5
Page Title: POWER TREE
Rev: v1.0.0
Date:
Design by:
Sheet 2 of 21

i.MX8M PWR

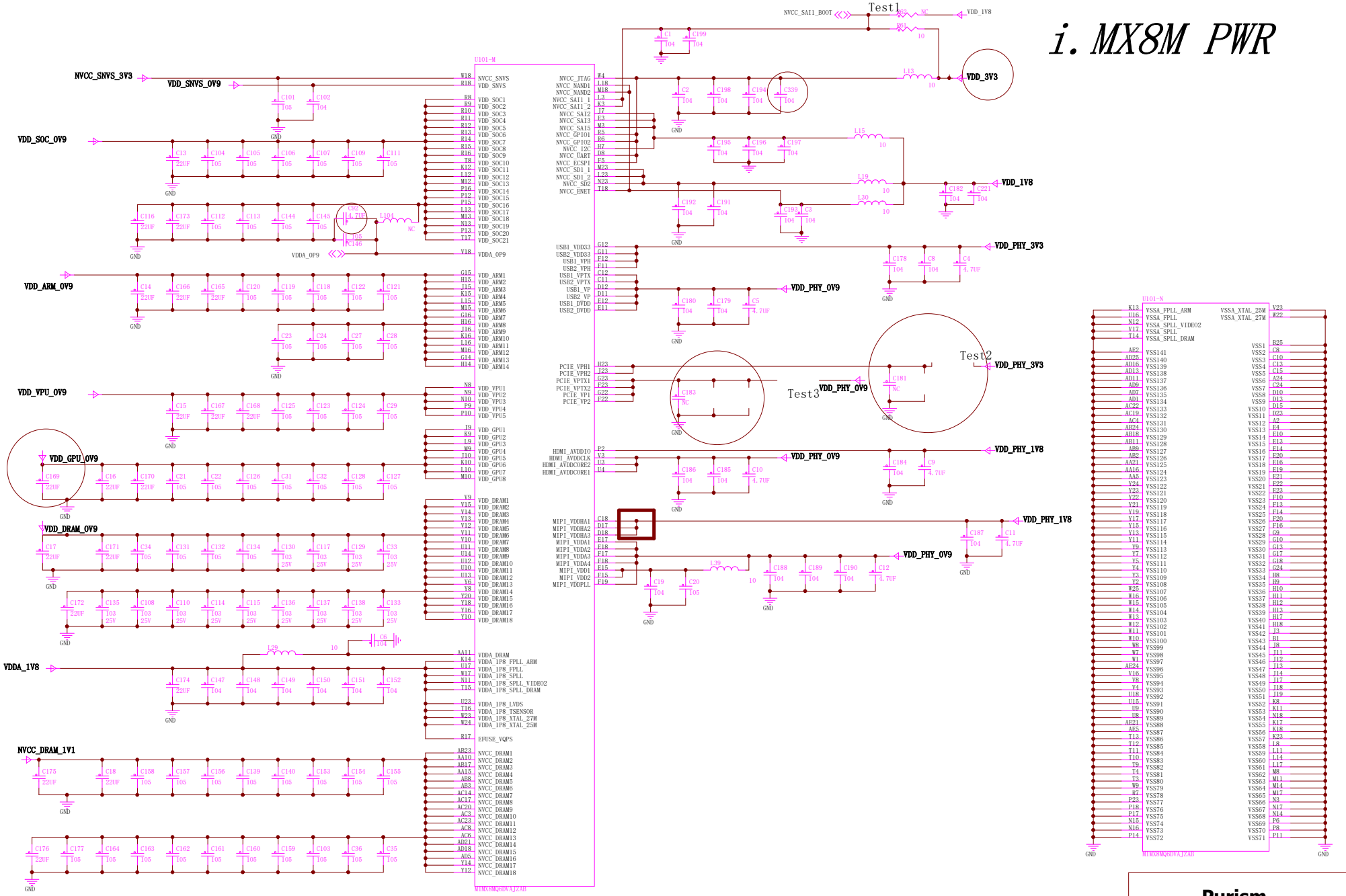

Purism		
Drawing Title: **Librem 5**		
Page Title: **CPU POWER**		
Rev: **v1.0.0**	Date:	Design by:
		Sheet 3 of 21

LPDDR4

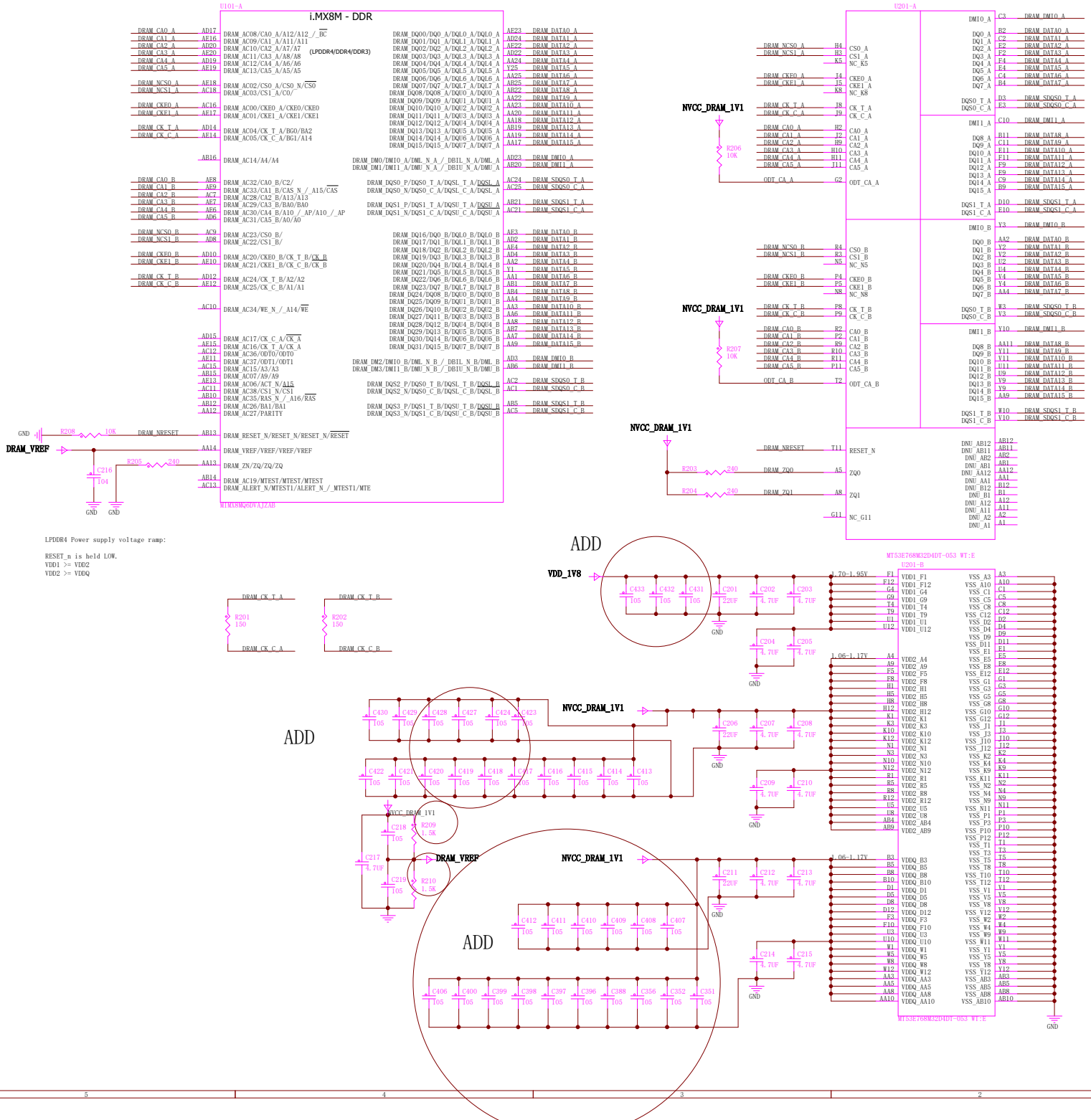

Purism	
Drawing Title:	Librem 5
Page Title:	LPDDR4
Rev:	v1.0.0
Date:	
Design by:	
Sheet	4 of 21

MIMX8MQ6DVAJZAA

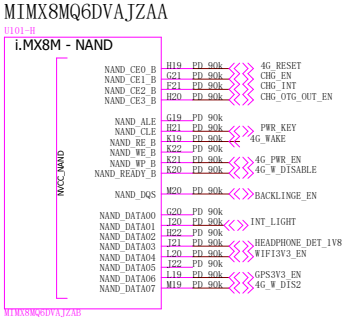

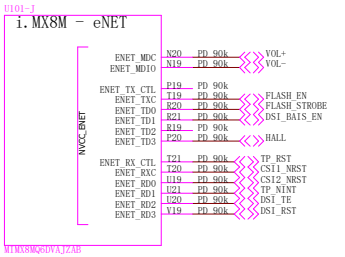

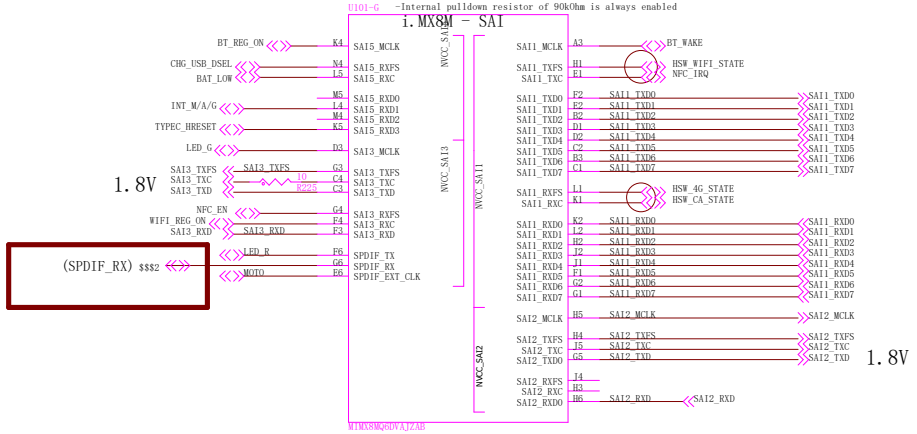

UART DBG

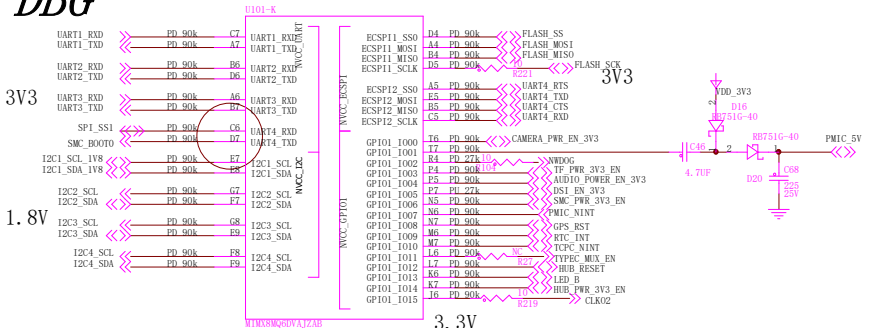

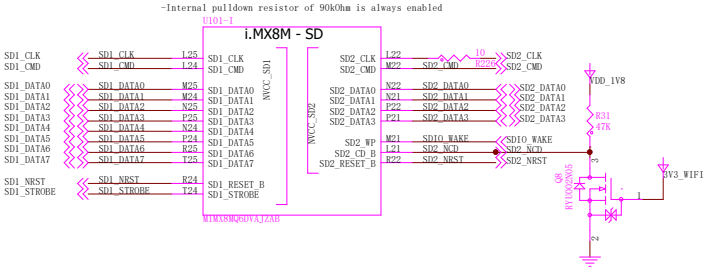

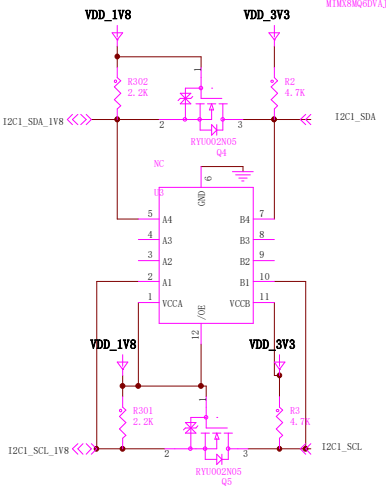

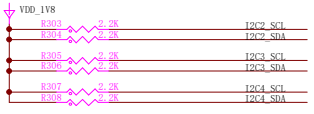

Purism

Drawing Title: **Librem 5**		
Page Title: **CPU IO**		
Rev: **v1.0.0**	Date:	Design by:
		Sheet 5 of 21

RTC

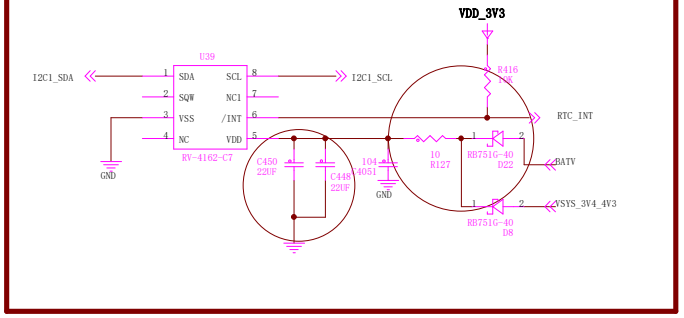

JTAG Debug

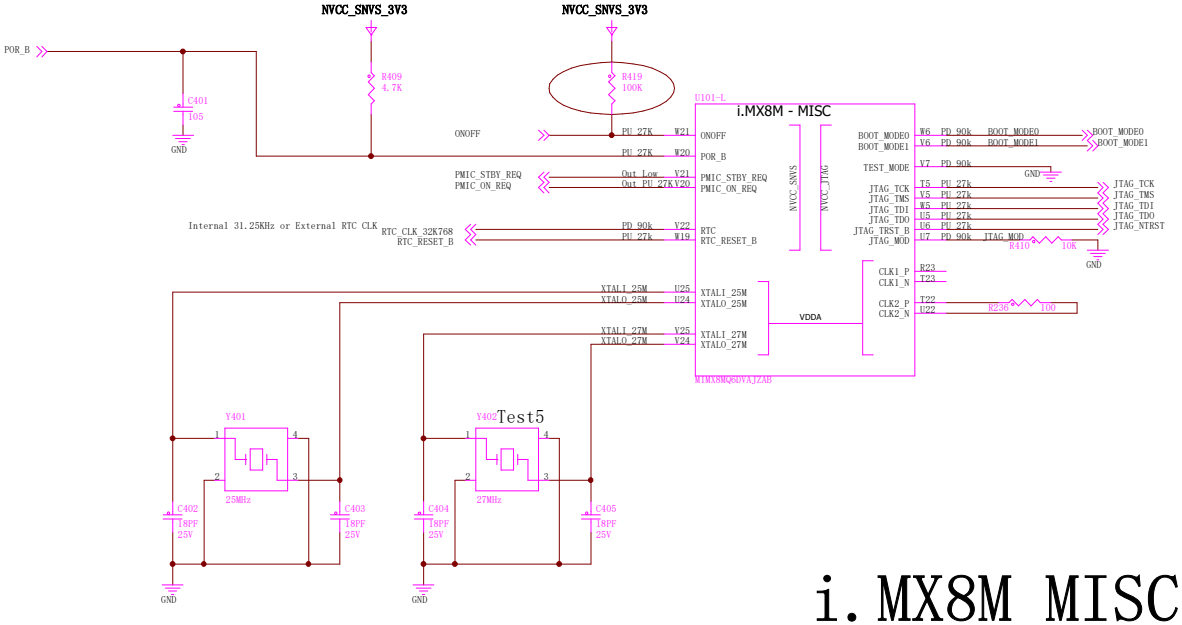

i.MX8M MISC

Purism		
Drawing Title: **Librem 5**		
Page Title: **CPU MISC, RTC**		
Rev: **v1.0.0**	Date:	Design by:
		Sheet 6 of 21

i.MX8M PHY

USB_RESREF: Attach a 200-Ω 1% 100-ppm/C precision resistor-to-ground on the board.
MIPIDSI_REXT: 15K-Ω
PCIE: 200-Ω±1% ± 100 ppm/° C precision resistor to-ground on the board.
HDMI:a 499Ω (±1% tolerance) resistor to-ground on the board

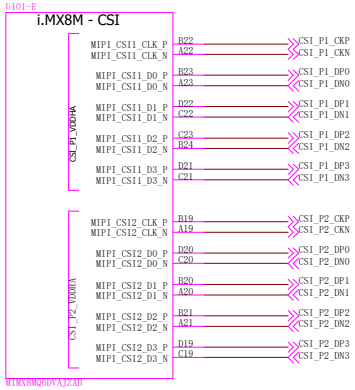

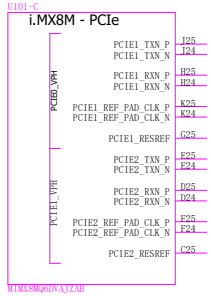

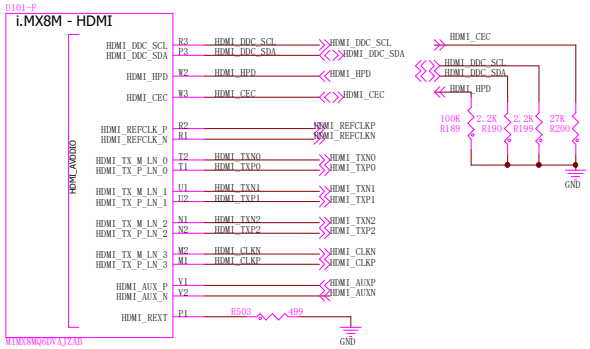

AC coupled differential low swing clock (HCSL levels)

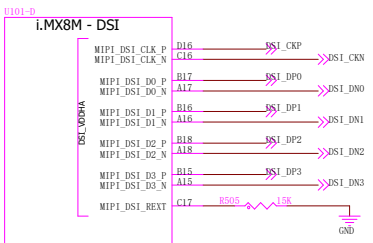

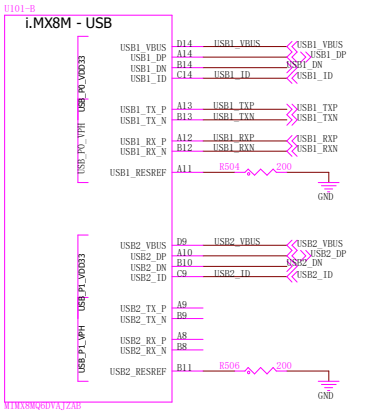

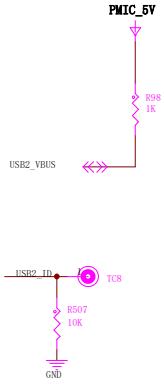

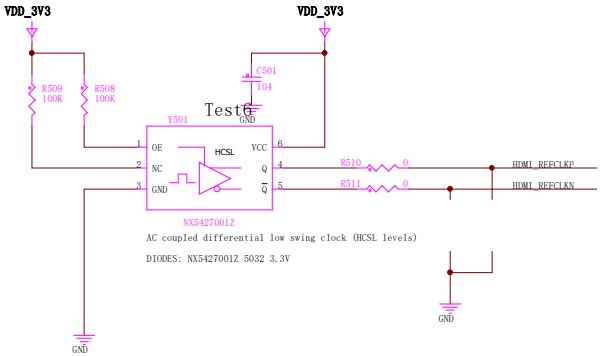

AC coupled differential low swing clock (HCSL levels)

DIODES: NX5427001Z 5032 3.3V

Purism		
Drawing Title: **Librem 5**		
Page Title: **CPU PHY**		
Rev: **v1.0.0**	Date:	Design by:
		Sheet 7 of 21

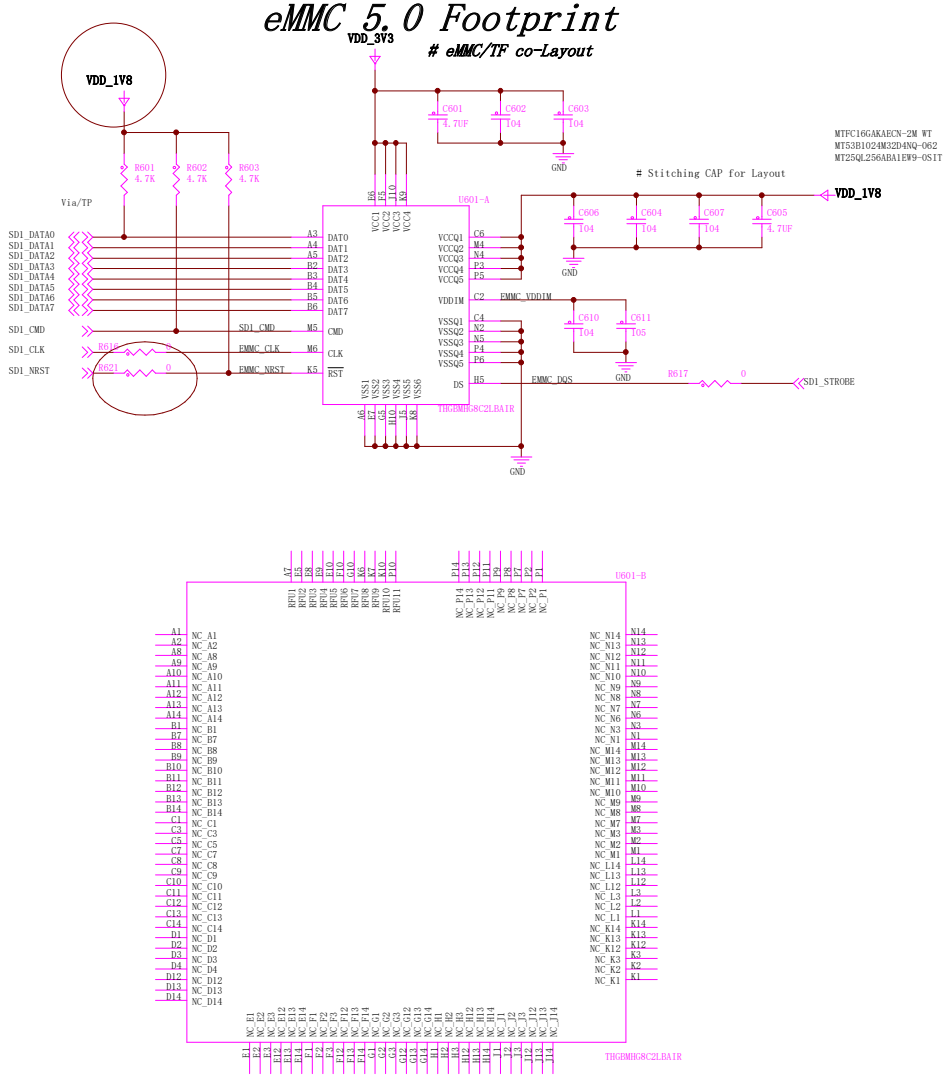

Purism		
Drawing Title: **Librem 5**		
Page Title: **EMMC**		
Rev: **v1.0.0**	Date:	Design by:
		Sheet 8 of 21

SYS PMIC/PWR

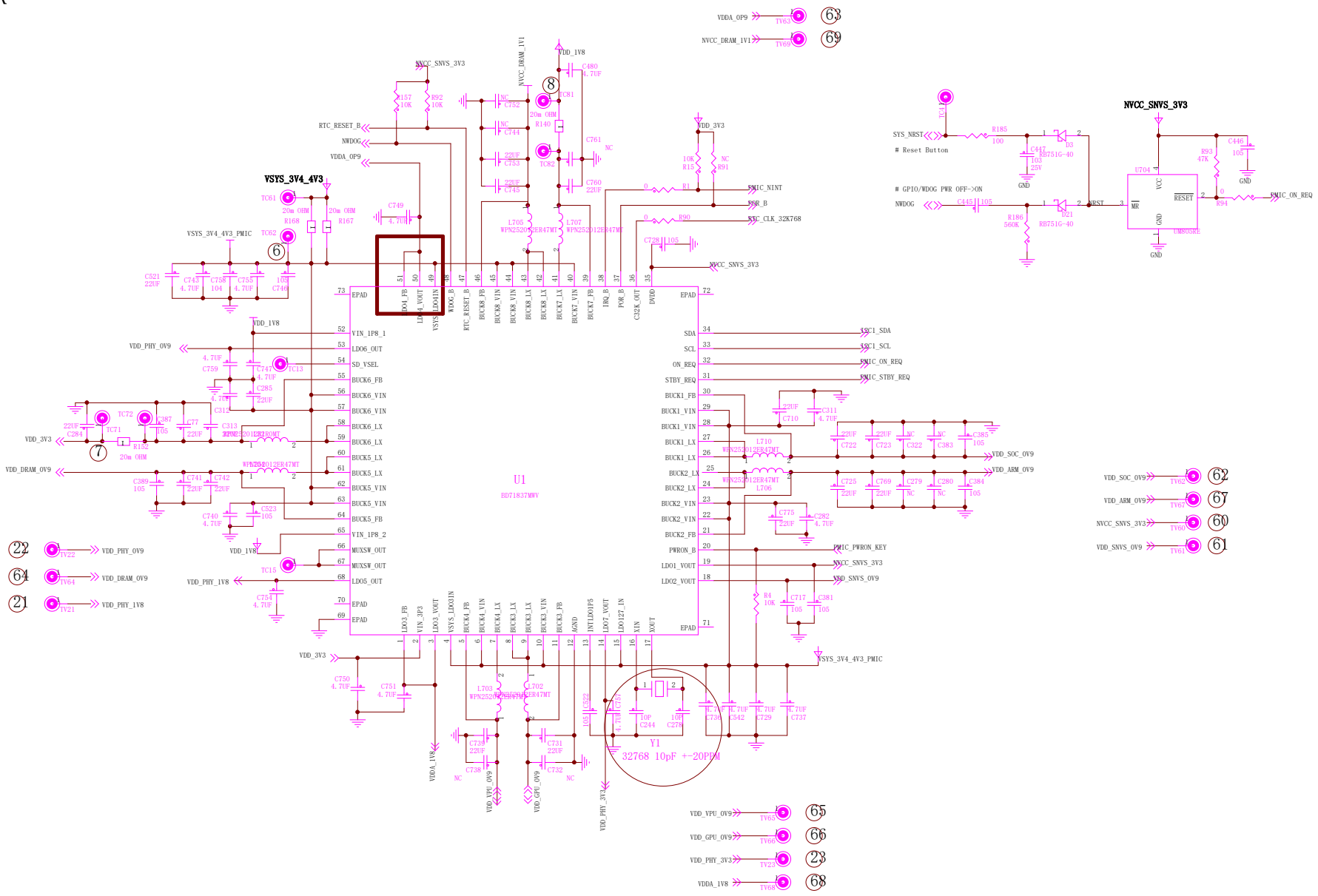

Purism	
Drawing Title:	**Librem 5**
Page Title:	**PMIC**
Rev: **v1.0.0**	Date:
Design by:	
Sheet 9 of 21	

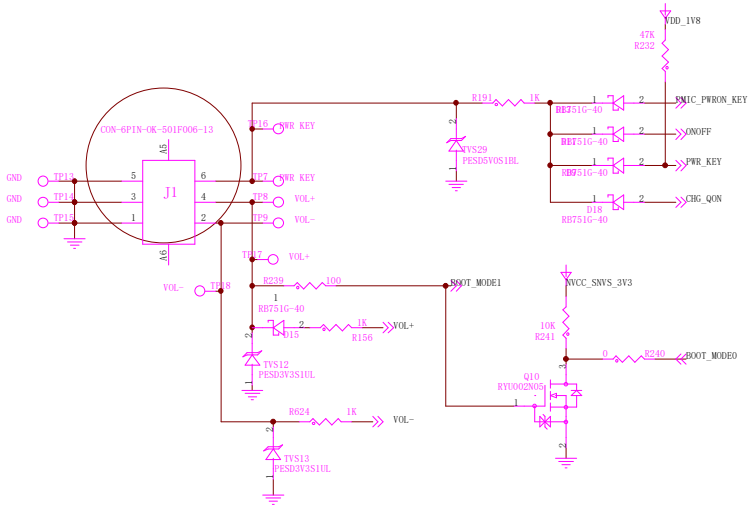

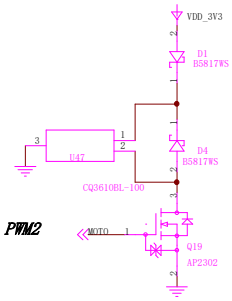

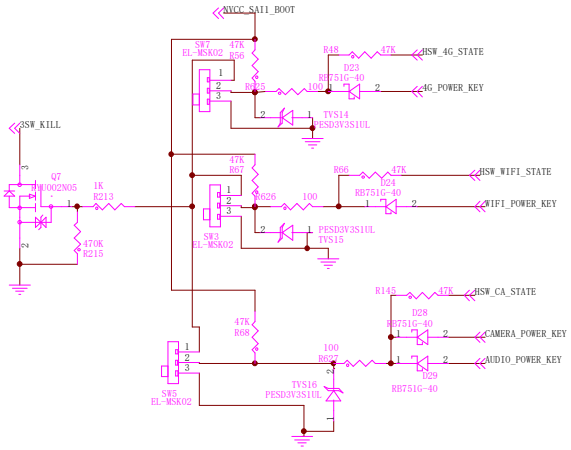

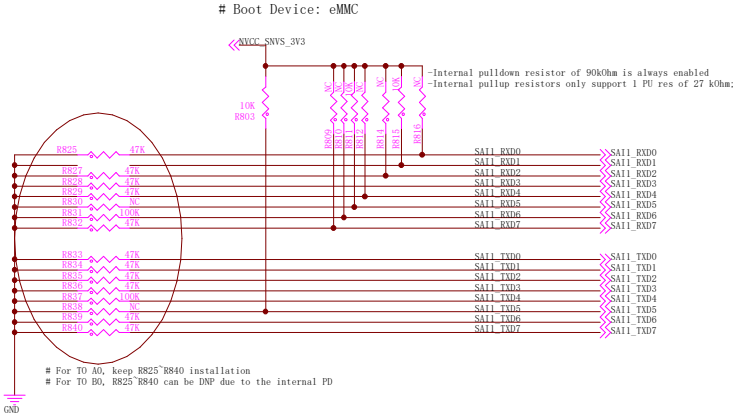

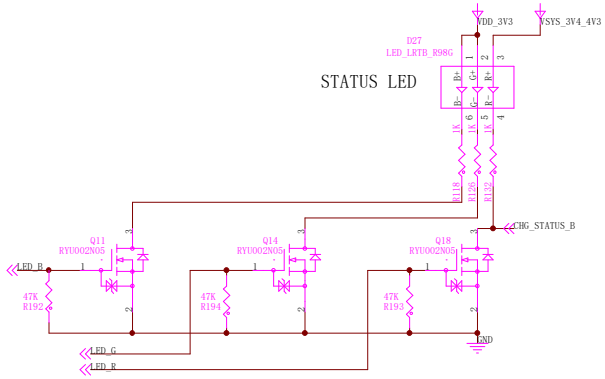

Purism		
Drawing Title: **Librem 5**		
Page Title: **BOOT CFG**		
Rev: **v1.0.0**	Date:	Design by:
		Sheet 10 of 21

USB3.0/2.0 TYPE-C/HOST

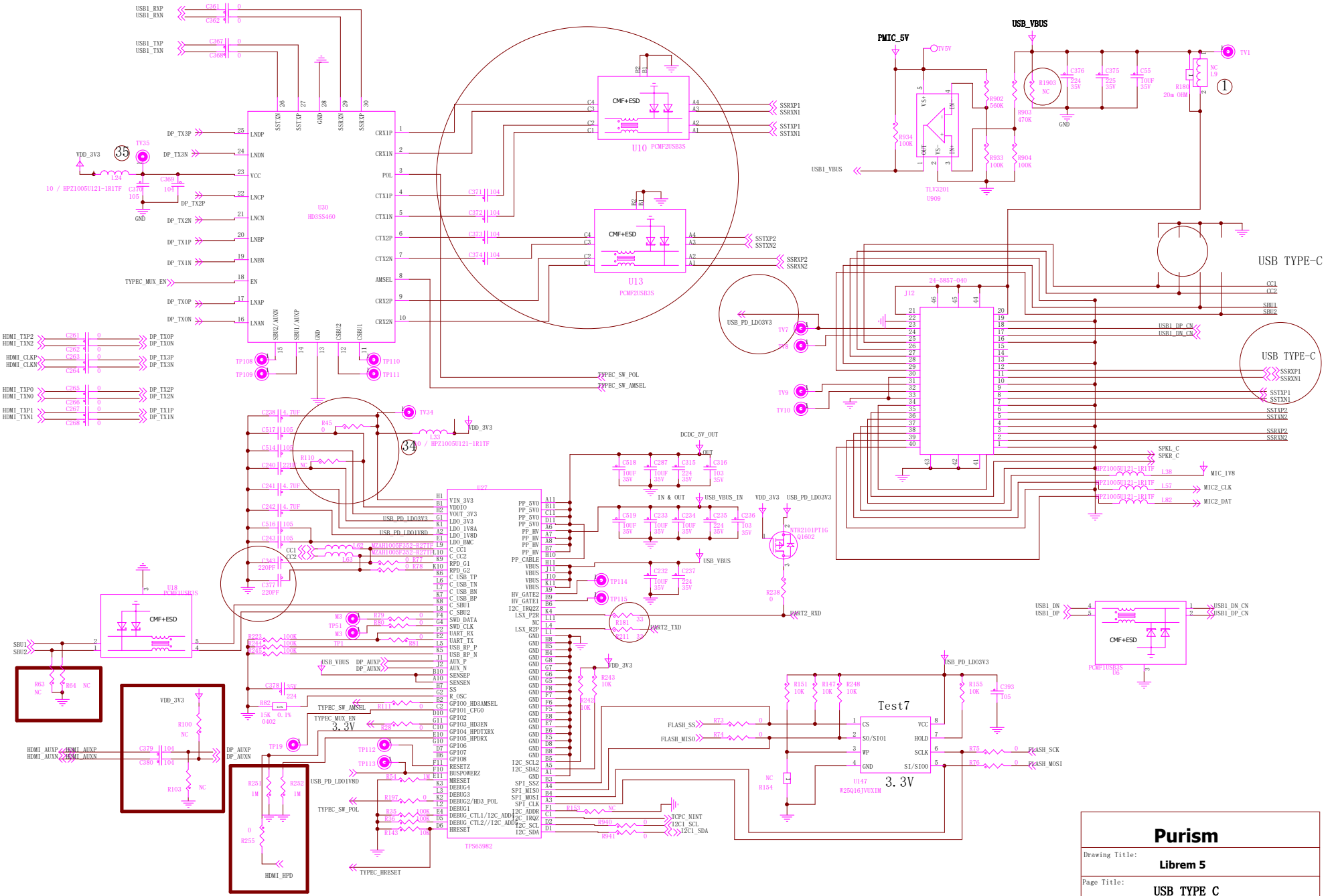

Purism		
Drawing Title: **Librem 5**		
Page Title: **USB TYPE C**		
Rev: **v1.0.0**	Date:	Design by:
		Sheet 11 of 21

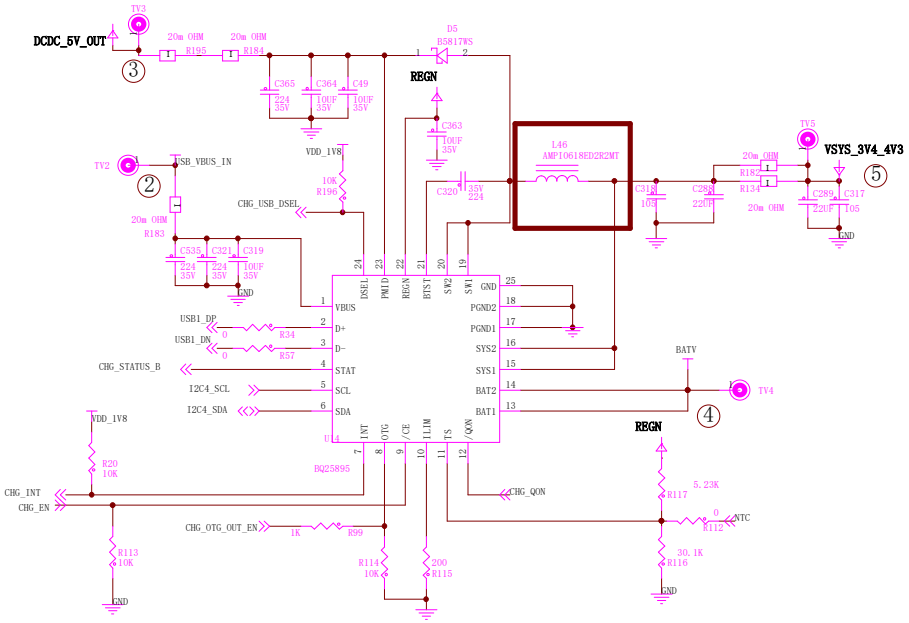

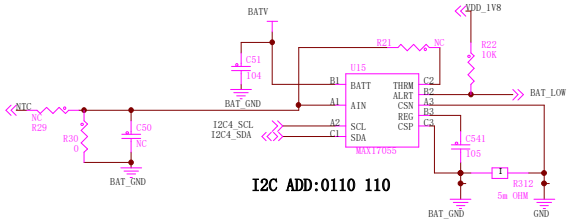

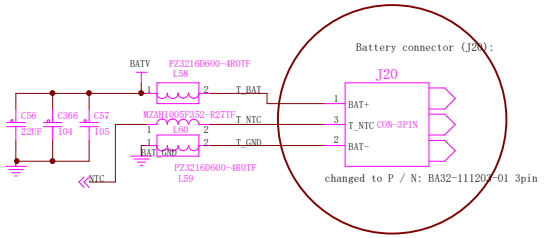

Purism

Drawing Title: Librem 5		
Page Title: CHARGE, BAT, LED		
Rev: v1.0.0	Date:	Design by:
		Sheet 12 of 21

Sensor

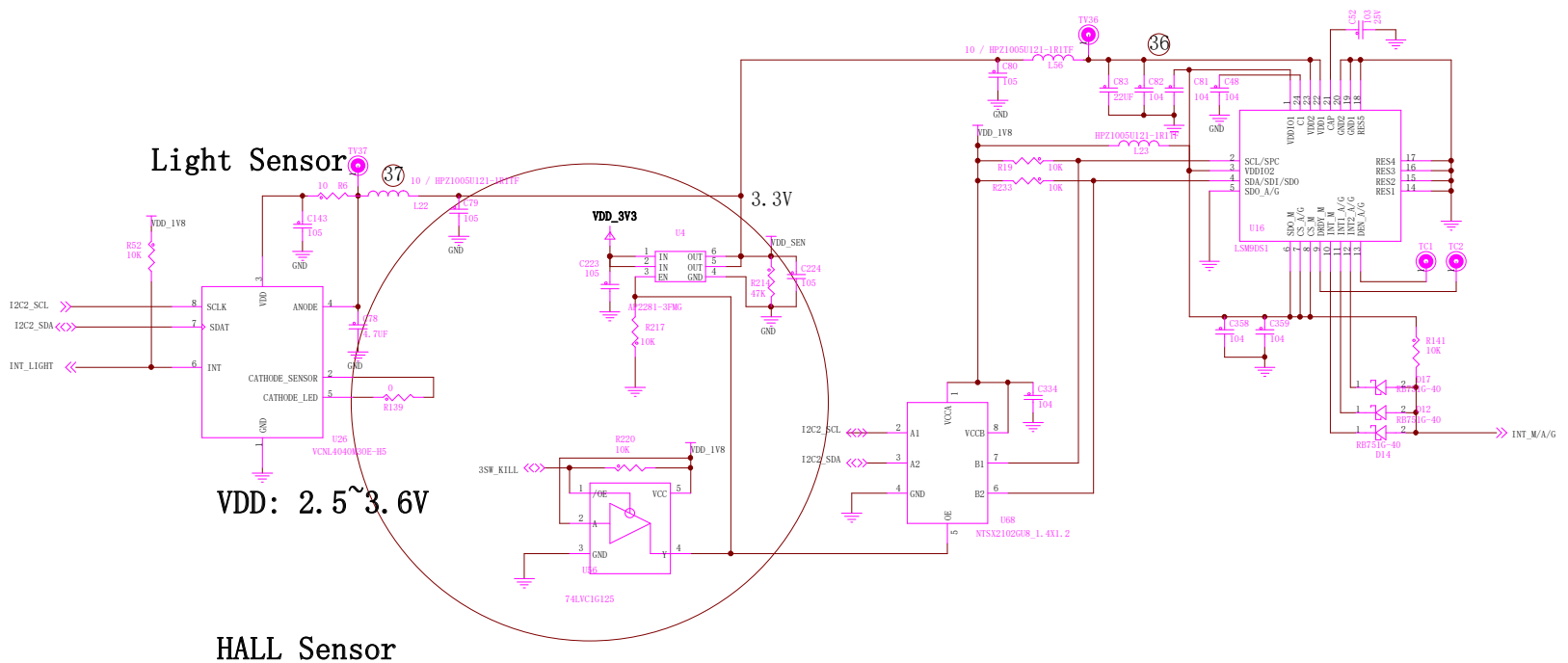

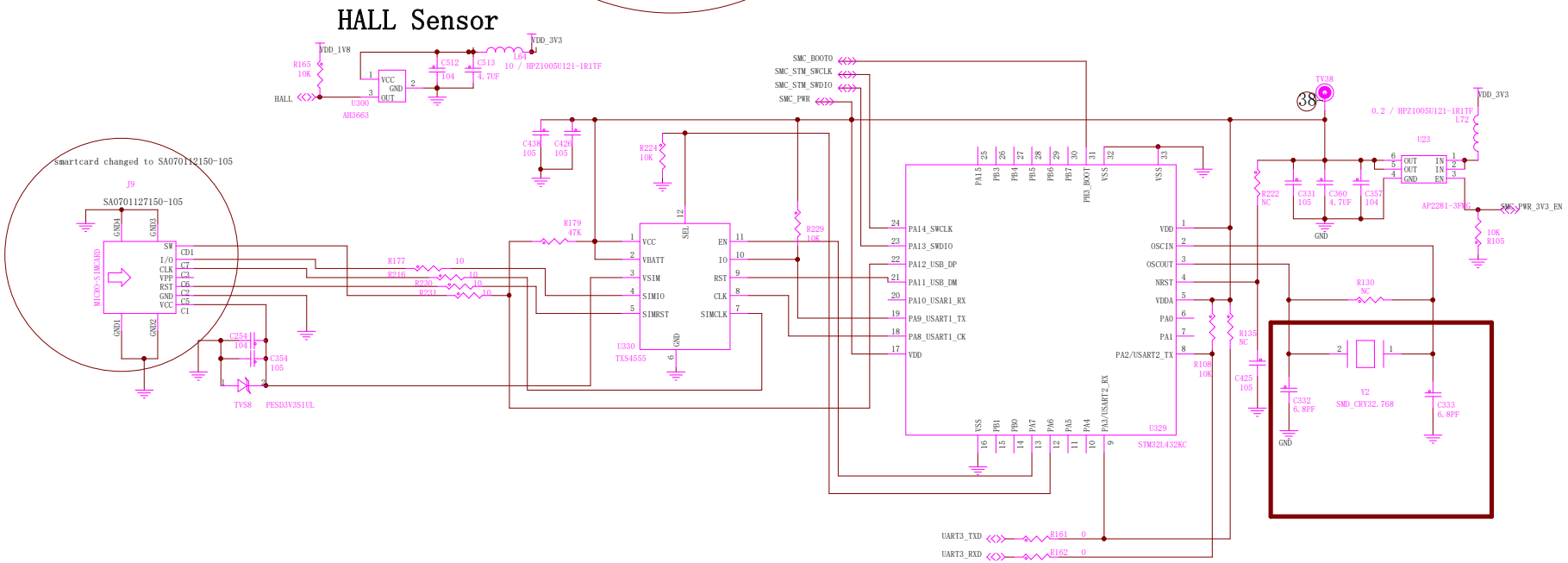

Purism		
Drawing Title: Librem 5		
Page Title: SENSOR, SMART CARD		
Rev: v1.0.0	Date:	Design by:
		Sheet 13 of 21

GNSS

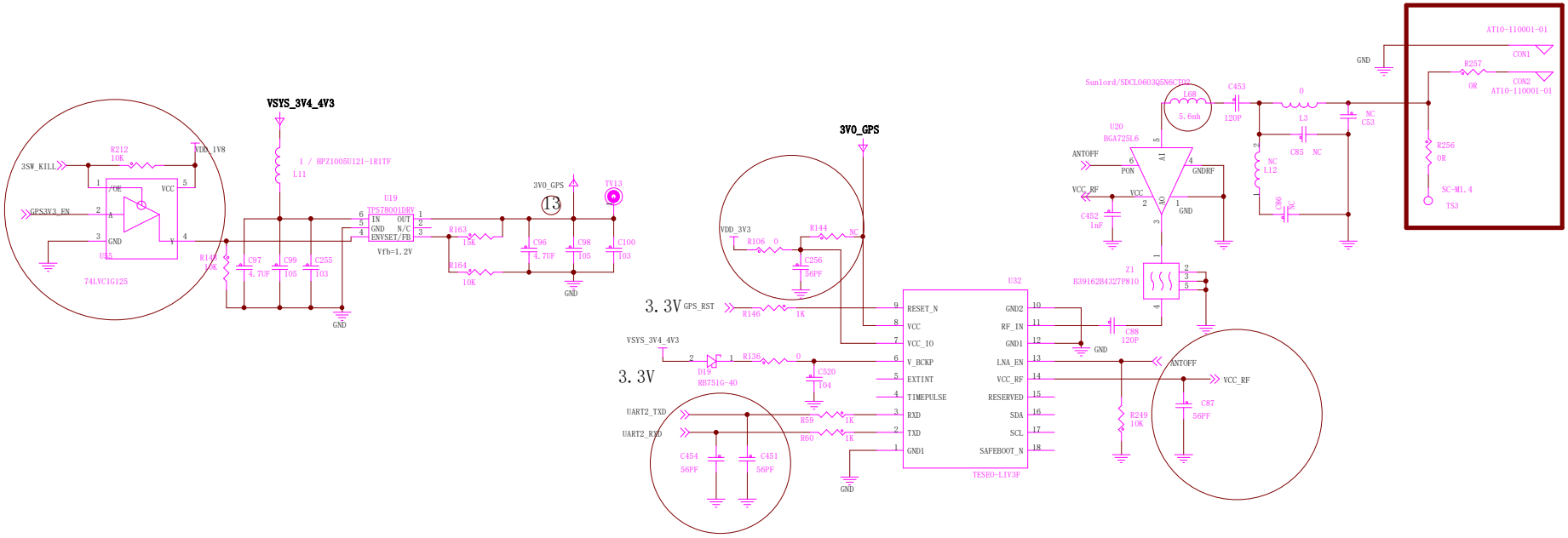

EXT CON

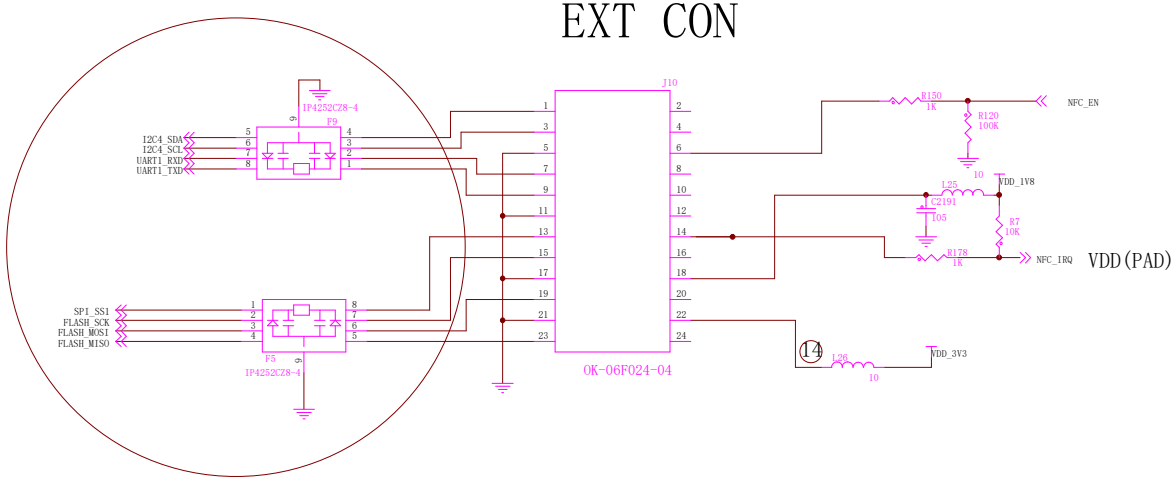

Purism	
Drawing Title:	**Librem 5**
Page Title:	GNSS
Rev: **v1.0.0**	Date:
Design by:	Sheet 14 of 21

WiFi/BT 802.11a/b/g/n/ac + Bluetooth 4.1/ EDR

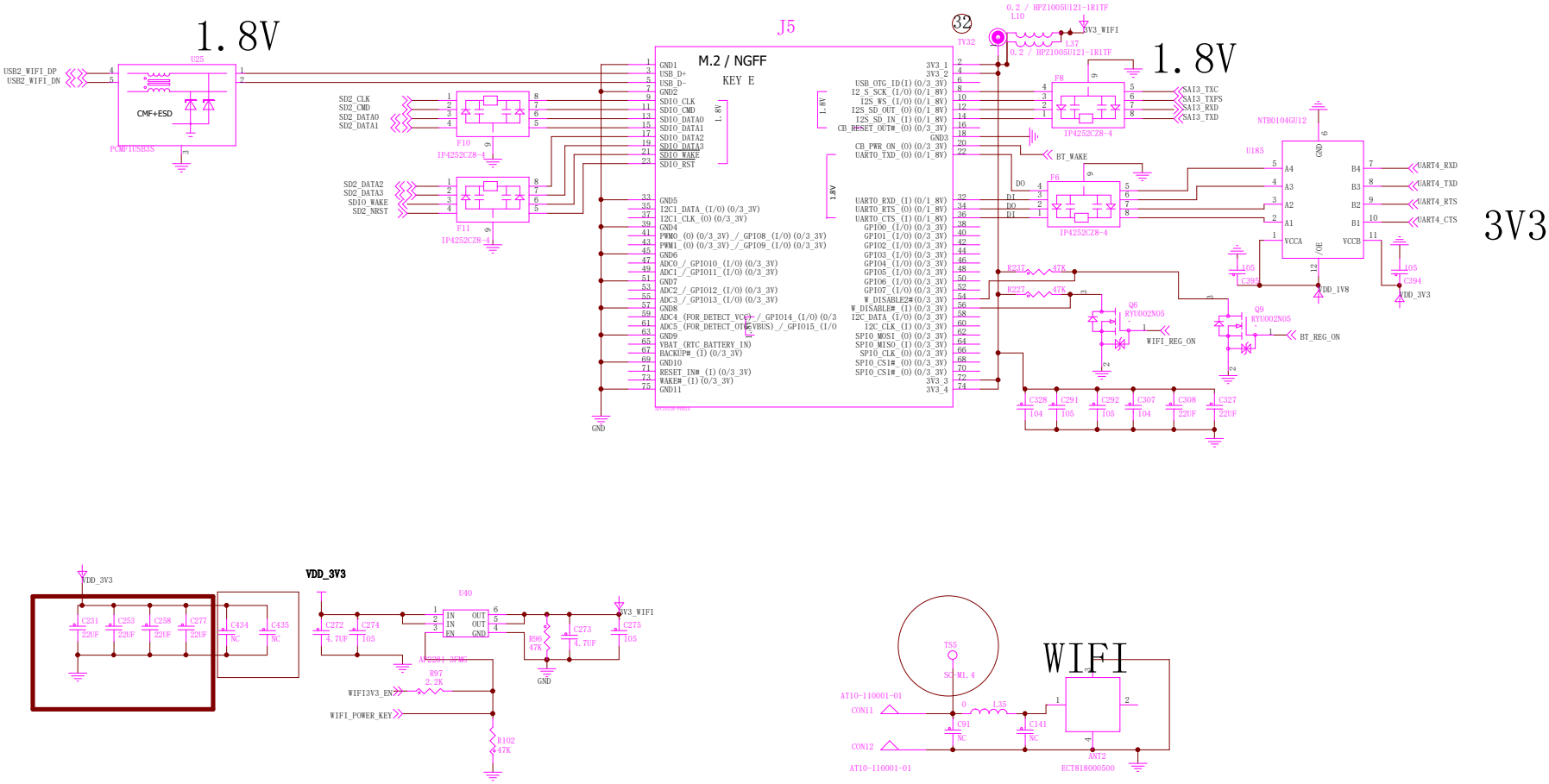

Purism	
Drawing Title:	**Librem 5**
Page Title:	**WIFI, BT**
Rev: **v1.0.0**	Date:
Design by:	Sheet 15 of 21

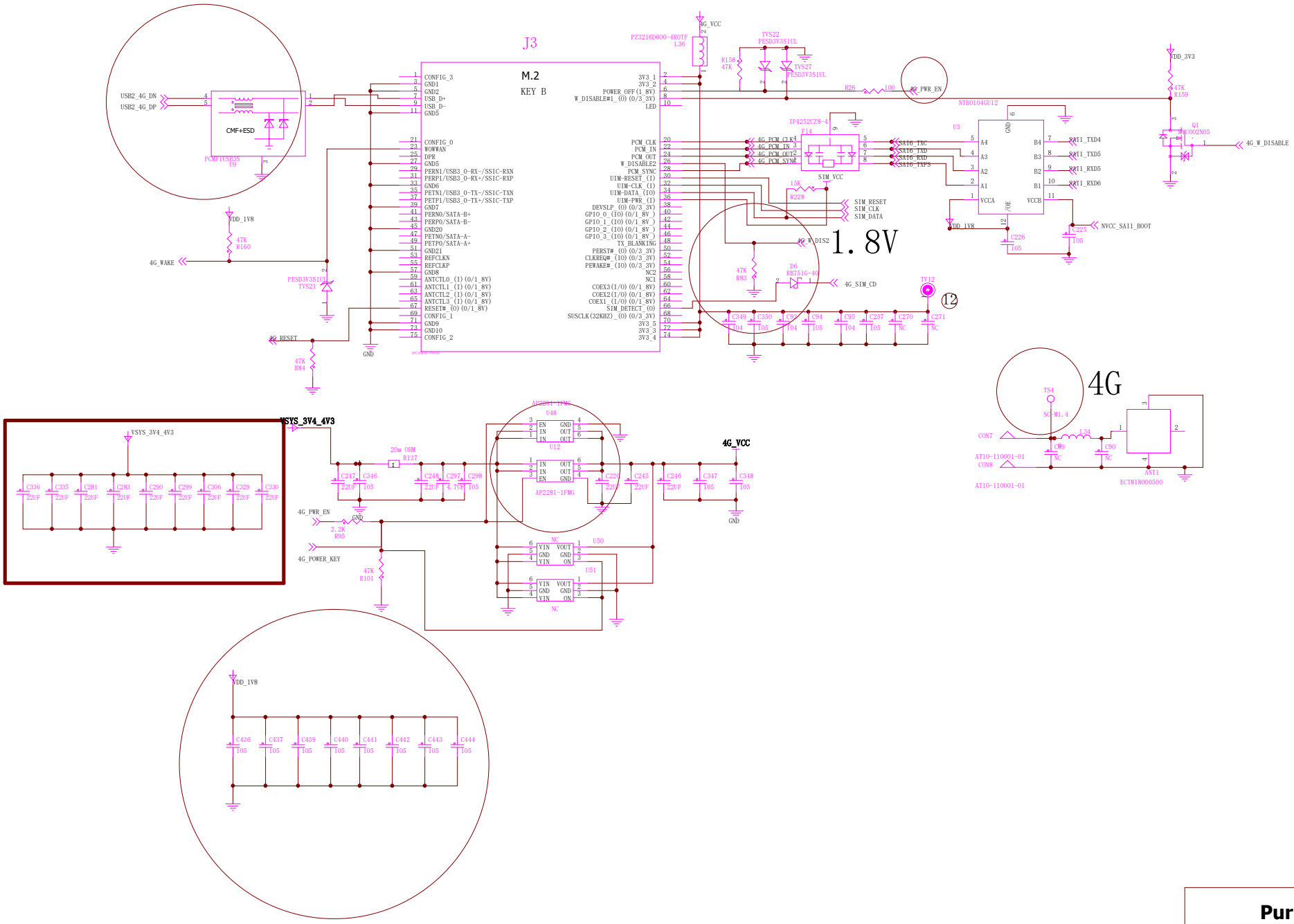

Purism

Drawing Title:	Librem 5
Page Title:	4G
Rev:	v1.0.0
Date:	
Design by:	
Sheet	16 of 21

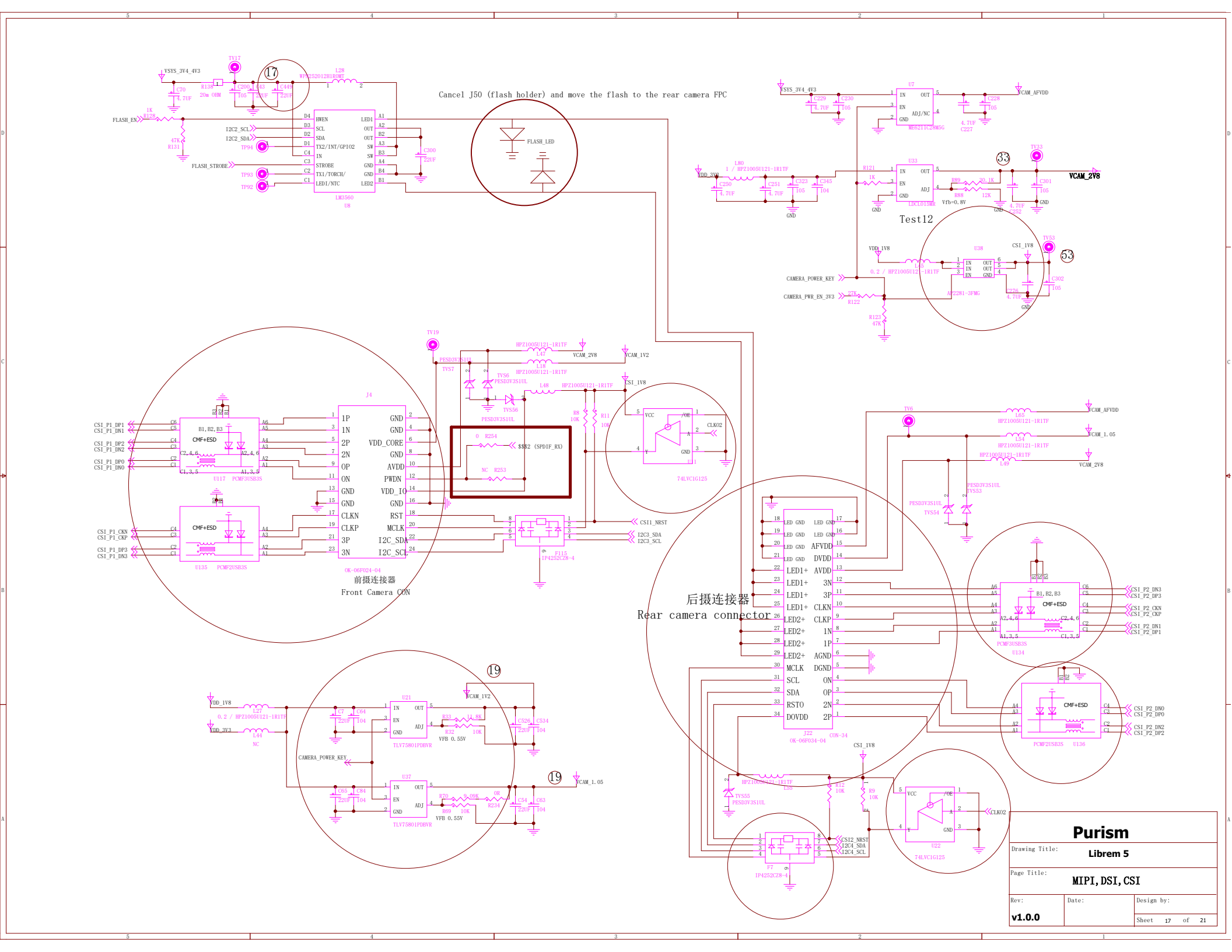
Cancel J50 (flash holder) and move the flash to the rear camera FPC
FLASH_LED
Test12
前摄连接器
Front Camera CON
后摄连接器
Rear camera connector
Purism
Librem 5
MIPI, DSI, CSI
v1.0.0
Sheet 17 of 21

DSI LCD IF

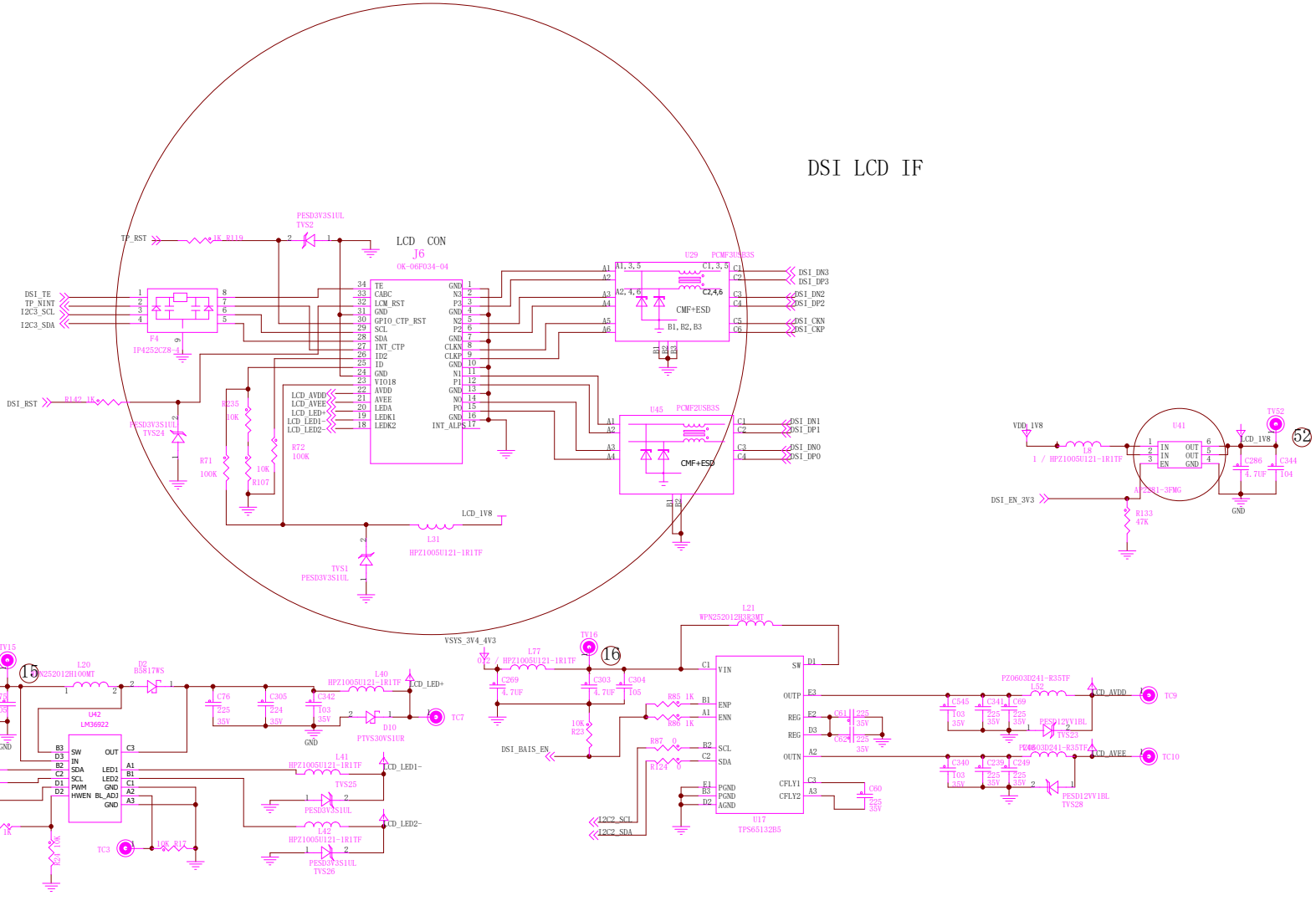

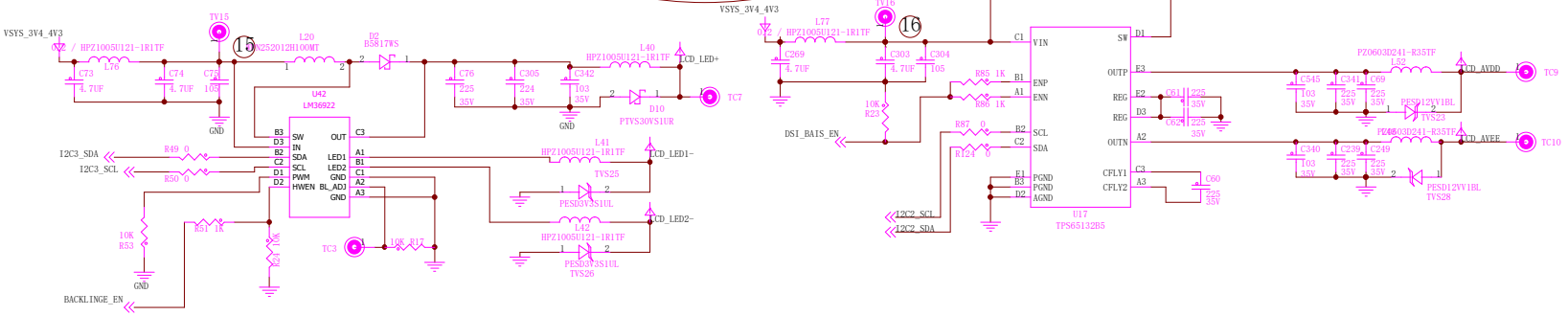

Purism		
Drawing Title: **Librem 5**		
Page Title: **MICROSD,MOTO**		
Rev: **v1.0.0**	Date:	Design by:
		Sheet 18 of 21

USB HUB + SDIO BRIDGE

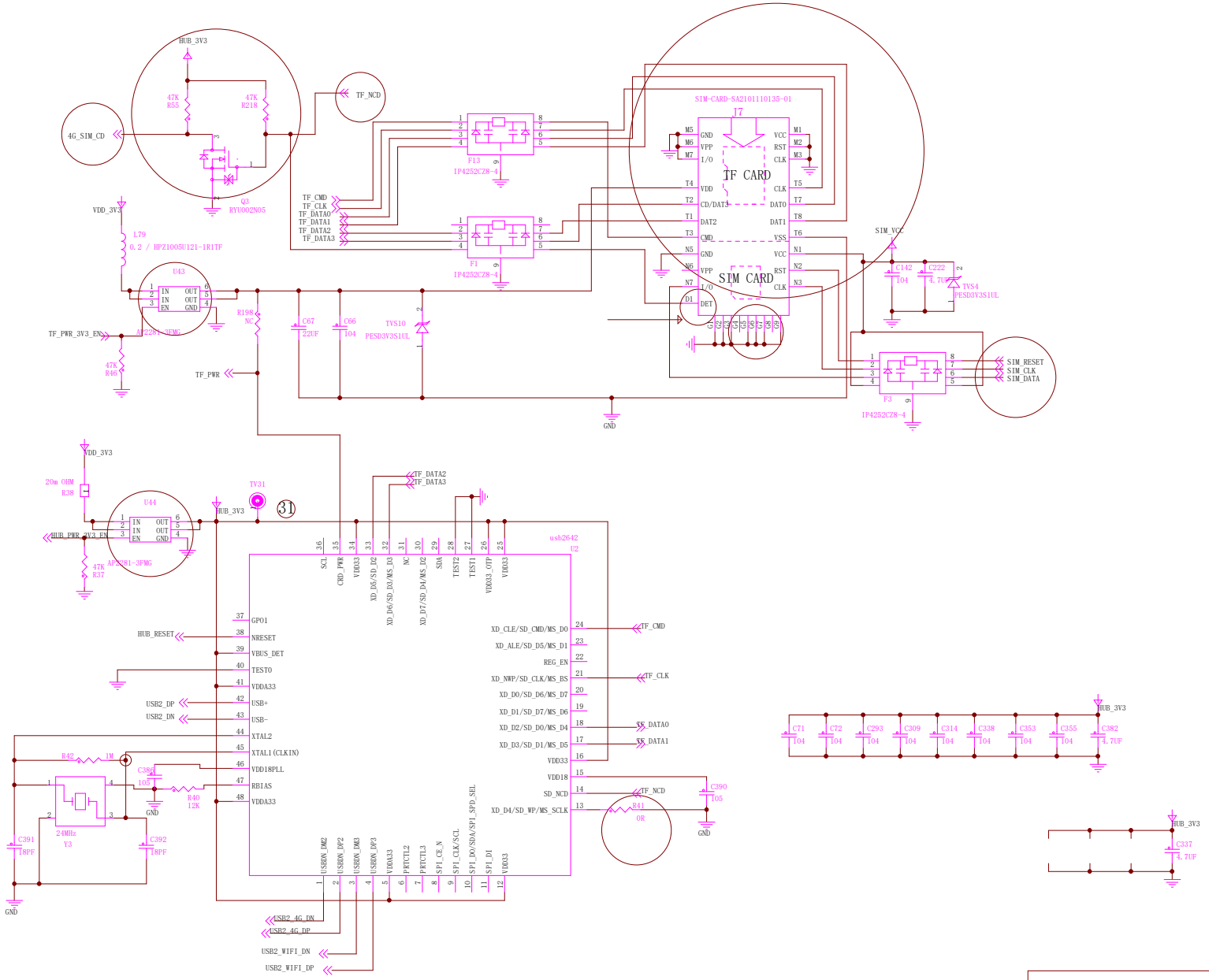

Purism		
Drawing Title: **Librem 5**		
Page Title: USB HUB		
Rev: **v1.0.0**	Date:	Design by:
		Sheet 19 of 21

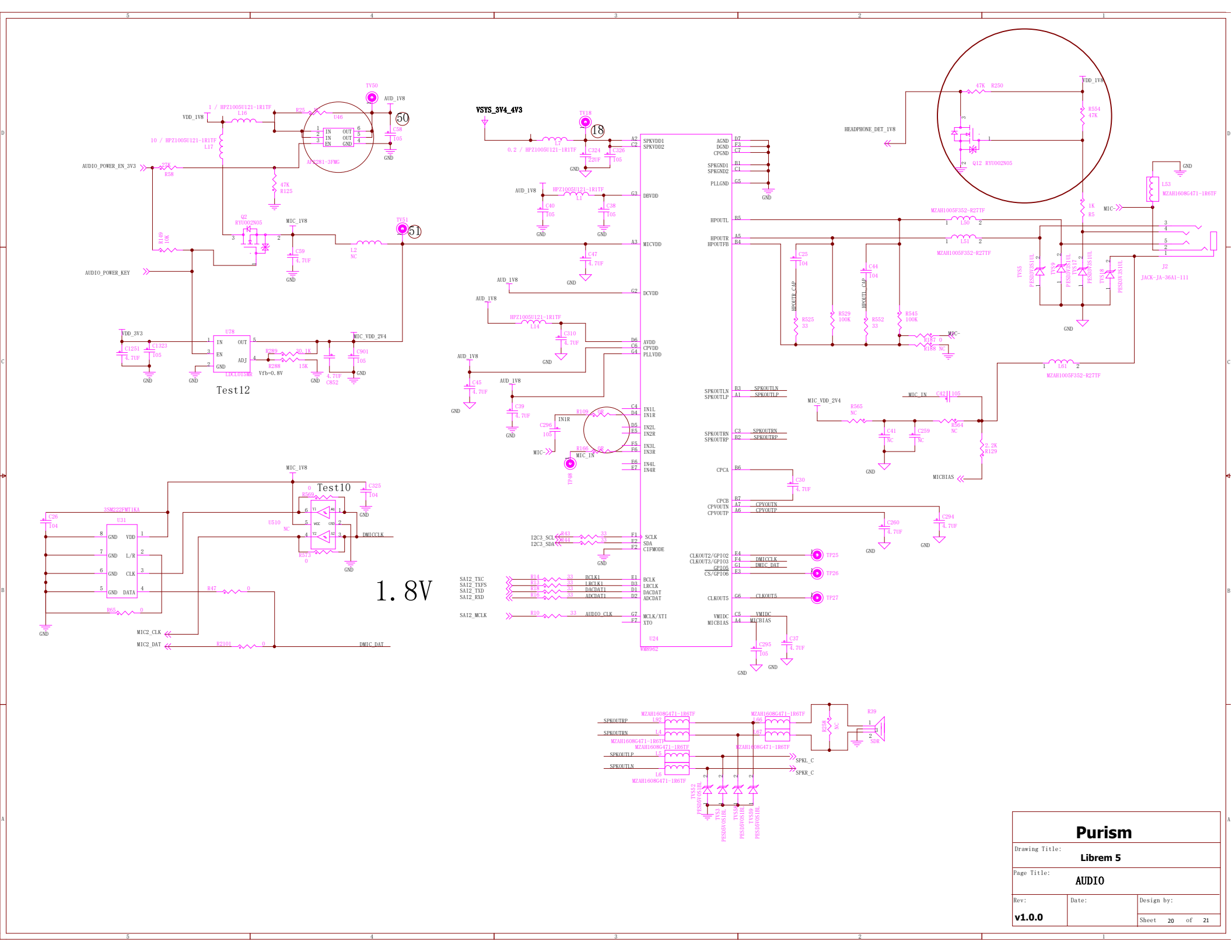

Purism			
Drawing Title: **Librem 5**			
Page Title: **AUDIO**			
Rev: **v1.0.0**	Date:	Design by:	
		Sheet 20 of 21	

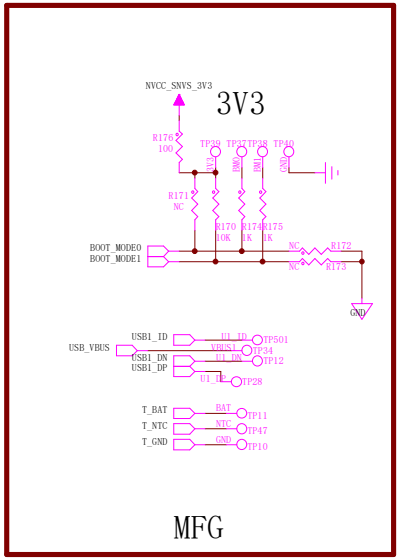

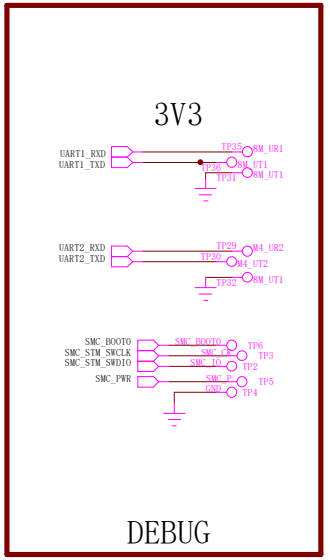

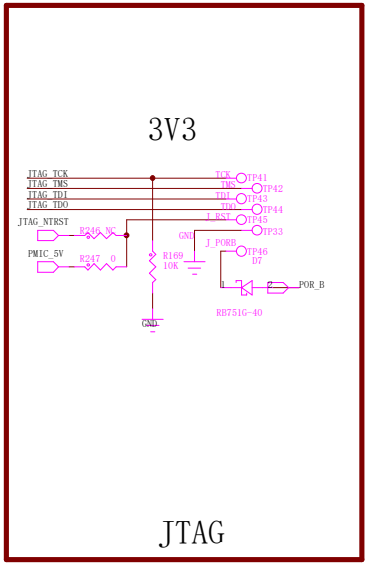

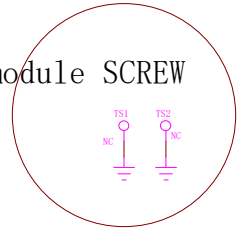

BMODE[1:0]	BOOT TYPE
00	Boot From Fuses
01	Serial Downloader
10	Internal Boot (Development)
11	Reserved

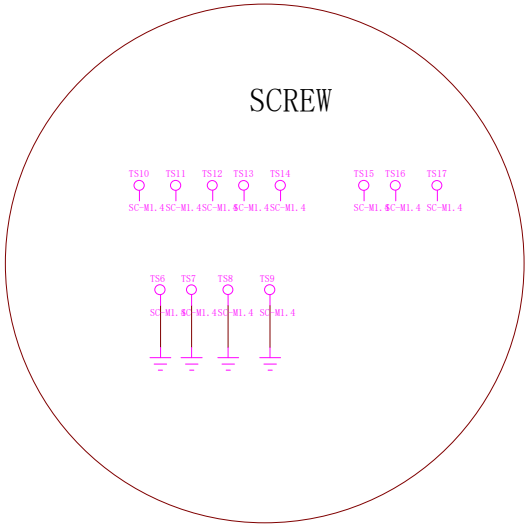

Shielding Case

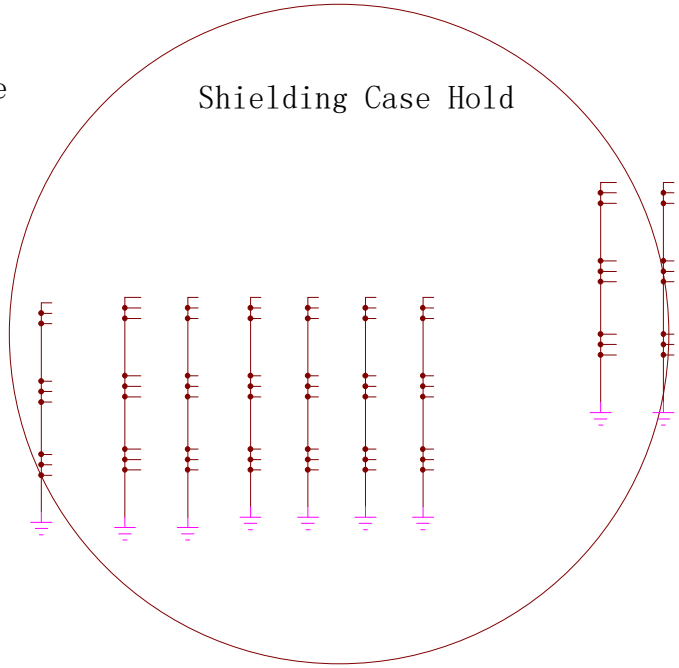

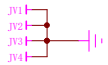

Purism		
Drawing Title: Librem 5		
Page Title: DEBUG		
Rev: v1.0.0	Date:	Design by:
		Sheet 21 of 21