V06

1, Del NFC PN7150, Add CON24, UART1 for GNSS or Debug, SPI2 to CON24, UART2 for BT
2, Move SMC_BOOT0 to Page 22 , TP6.
3, HKs Add Pull-up Resistor , And add Read state GPIO.
4, TYPE-C U27 LSX no connect.
5, Correct Y2, Y3 Connect.
6, Add Voltage Test Point , >40 point
7, Add SIM DET D6.
8, CAMERA Modify. Add LDO for DVDD 1.2 and 1.05.
9, TFT con Modify.
10, STM32 PA10 NC. UART add Pull-up R108, R135

V07

1, UART1 to LSX, UART2 to GNSS, UART4 to bt, SPI1 to CON24
2, U329 19PIN add Pull-up R229 .

V08

1, UART2 to LSX
2, HW state IO add resister. R48, R66, R145
3, 4G, WIFI ant CON add Debug L,C
4, Add shielding Case Hold.
5, DEL F12, Modified IO U329 for L9 layer to GND.
6, INT_M/A/G, NFC_EN, NFC_IRQ modified IO to E1 for L2 to GND
7, ADD R232

V09

1, AUX_P , AUX_N swapped.
2, Add R236.
3, Del R153
4, LED_G to 8M D3 pin. NFC_IRQ to 8M E1 pin, INT_M/A/G to 8M L4 pin.
5, R122,R58 to 27K, R123 to 47K.
6, 4G used SAI6. ADD u5

V091

1, U5 8pin to SAI1_TXD5, 9pin to SAI1_RXD5.
2, ADD U7 for CAM_AFVDD, 2.8V 120mA。
3, U2 modified USB2642

V092

1, BOOT Resistor Modified.
2, EMMC 32G.
3, U3 NC.
4, PWM IO modify. MOTO E6, PMIC_5V T7, LED_B K6.

V093

1, R830 NC, R811 10k.

V094

1, BAT CON Modified for 1000 times.
2, ADD L66 L67

V095

1, R115 Modified to 200.

V096

1, ADD R153 for TPS65983B Slave.
2, Modified LM36922 to I2C3, J10 to I2C4.

V097

0, CHG_STATUS_B connect Red LED.
1, Add N-mosfet Q8 on SD2_NCD.
2, TPS65982 LDO_1V8D Connected BUSPOWERZ.
3, VDD_3V3 add 4x22uf C231....
4, VSYS_3V4_4V3 add 7x22uf C281....
5, U27 TPS65982 F2 UART_RX 100k R223 connect GND.
6, Add NET BT_WAKE
7, AUDIO_POWER_KEY connect Q2 PIN1.
8, ADD U68 NTSX2102
9, BOOT_CFG PU to NVCC_SNVS_3V3
10, R176 PU to NVCC_SNVS_3V3
11, R104 10 value.
12, R82 0402 0.1%
13, R934 100K
14, U2 USB2642 27,28 connect GND, 26 connect VDD.
15, ADD Q9, Modified WIFI_REG_ON, BT_REG_ON.
16, ADD R238 UART2_RXD PU USB_PD_LDO3V3
17, ADD Q10, R239, R240,R241
18, Add TYPEC_HRESET,
19, R42 1M ,
20, U147 connect TPS65982
21, SW3,SW5,SW7 2-3PIN
22, J50 modified
23, J12 modifed

V098

1, 0 ohm jumpers SPI.
2, C181 NC
3,main board usb 2.0 connector
4,PFET pull up UART2_RX
5,red LED powered by VSYS
6, TPS65982 I2C2 10K pull-ups
7, TPS65982 remove_usb 2.0
8, TP34 connect USB_VBUS for test
9, SPI MISO ADD pull-up 10K
10, ADD u50,U51 , C335,C336

V099

(11) Battery connector (J20): changed to P / N: BA32-111203-01 3pin
(12) Cancel J50 (flash holder) and move the flash to the rear camera FPC
(13) change J22 to P / N: OK-06F034-04
(14) J9 smartcard (80500122) is changed to SA070112150-105
(15)Headphone socket (J2) changed to JA-36A1-111
(16)
(17) SIM +TF Card changed to SA2101110135-103-01, TF_NCD and 4G_ SIM_ (Change to plastic tray)
(18)R166, R109 changed to 0R
(19)Connect SMC_ Boot0 to D7 pin of imx8mq
(20)R41(47K) changed to 0R
(21)ADD CLOCK Crystal(Y1)VALUE:32.768K 10pF ±20ppm
(22)Use TLV75801PDBVR instead of LCDL015MR for U21 and U37
Make R33=11.8kΩ
Make R70=9.09kΩ
Remove R234 (0Ω)
(23) add a test point to pin C2 of the TPS65982 (U27's GPIO1_CFG0)
(24) add inverter (Q12)
(25) ADD C339
(26)ADD C351/352/356/388/396/397/398/399/400/406/407/408/409/410/411/412/413/414/415/416/417//418/419/420/421/422/423/424/427/4287/429/430/431/432/433 1UF 6.3V 0201
(27) C434 C435 NC
(28) ADD C436/437/439/440/441/442/443/444 0201/1UF
ADD: C448 C449 C450 22UF 0603 6.3V
(29) R209 R210 changed to 1.5K
(30) DEL R1903
(31) ADD: LNA BGA725L6 & SAW filter B39162B4327P810. etc
(32)Bring USB_PD_LDO3V3 to pin 23 of J12 on the main board:
(33)Remove TVS11, TVS30, TVS31, and TVS32 on the main board:
(34) C343/C377 changed to 220PF
(35)change the connection of PMIC(U1) Pin49
(36)Change U101 MIPI_ VDDHA3 connection
(37) R63/ R64,/R100/ R103 NC.
(38) C379 and C380 = 100nF (0.1uF)
(39) ADD R251/R252 1M
(40) ADD :Y2 (32.768K)/C332/C333(6.8Pf)
(41) ADD :R253/NC
(42) ADD R254/0 OHM
(43) Add connection between J4's pin12 and U101's G6
(44) add R255/0 ohm
(45) C87/C256 changed to 56pF
(46) ADD C451/C454 56pF

V1.02

1. Q12 CHANGE TO BSS138PW
2. R5 CHANGE TO 10R
3. D10 change to PTVS16VS1UR (USB Board)
4. ADD PTC FUSE :400CC1206LR-C (USB Board)
5. DEL R180, R184
6. ADD L9
7. ADD D25(NSR20F30NXT5G);
8. The connection network of R2 and R3 is changed to nvcc_ SNVS_ 3V3
9. The 33 and 34pin of PMIC increase 0 ohm resistance (R259/R260)
10. D6 changed to 0 ohm resistor (R261)
11. R55 and R218 connect to VDD_ 1V8
12. Add Q13, R263 and related networks
13. J22pin of U101 is connected to TF_ NCD
14. C736 Change to 22uF
15. C740 Change to 10uF
16. J12 PIN define have changed.
17. The value of R118,R126 change to 18R, the value of R132 change to 100R

GNU GPLv3+
Copyright 2020
Purism SPC

Purism		
Drawing Title: Librem 5		
Page Title: VER note		
Rev: v1.0.2	Date:	Design by:
		Sheet 1 of 21

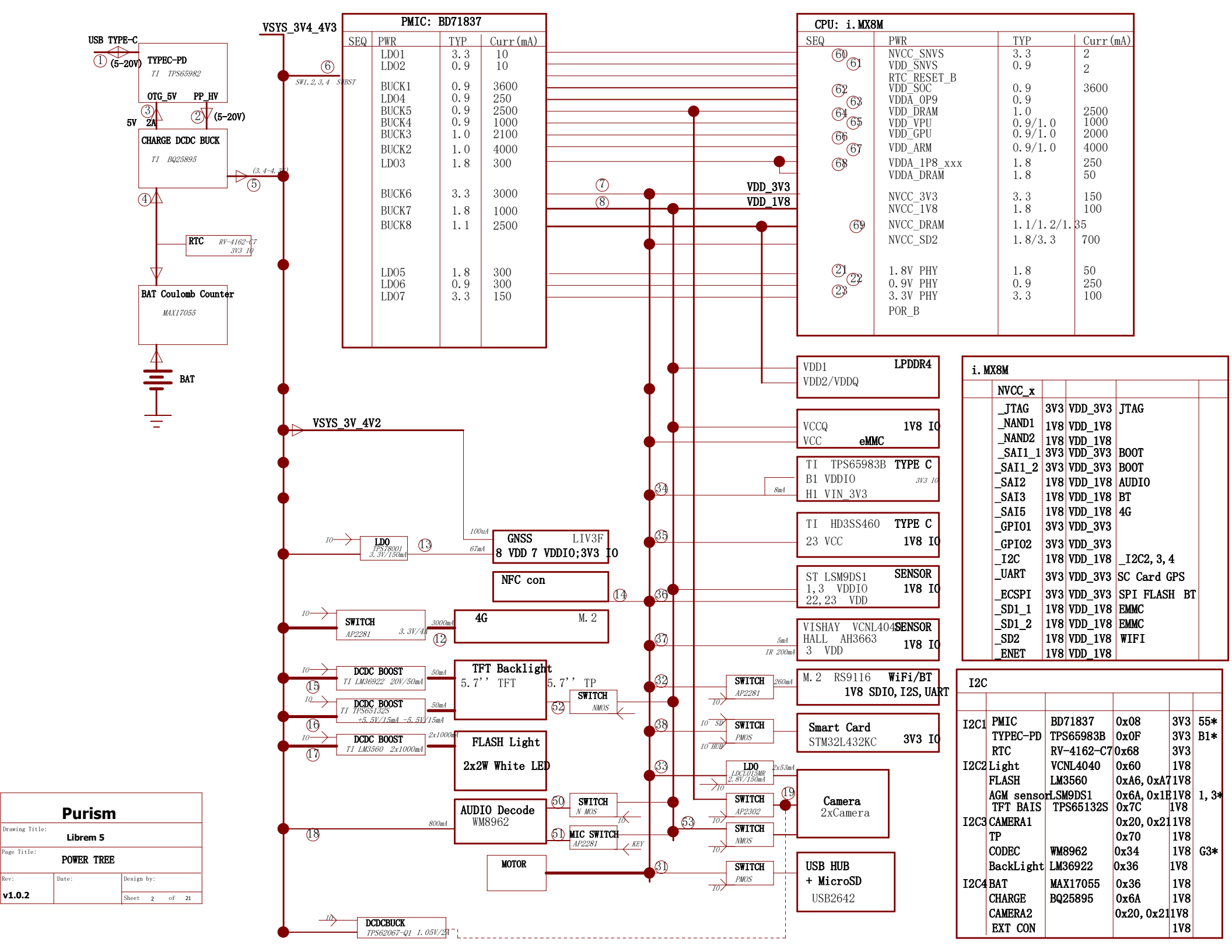
USB TYPE-C
(5-20V)
TYPEC-PD
TI TPS65982
OTG_5V
PP_HV
5V 2A
(5-20V)
CHARGE DCDC BUCK
TI BQ25895
RTC
RV-4162-C7
3V3 IO
BAT Coulomb Counter
MAX17055
BAT
VSYS_3V4_4V3
SW1,2,3,4 SWBST
VSYS_3V_4V2
PMIC: BD71837
SEQ PWR TYP Curr(mA)
LDO1 3.3 10
LDO2 0.9 10
BUCK1 0.9 3600
LDO4 0.9 250
BUCK5 0.9 2500
BUCK4 0.9 1000
BUCK3 1.0 2100
BUCK2 1.0 4000
LDO3 1.8 300
BUCK6 3.3 3000
BUCK7 1.8 1000
BUCK8 1.1 2500
LDO5 1.8 300
LDO6 0.9 300
LDO7 3.3 150
CPU: i.MX8M
SEQ PWR TYP Curr(mA)
NVCC_SNVS 3.3 2
VDD_SNVS 0.9 2
RTC_RESET_B
VDD_SOC 0.9 3600
VDDA_0P9 0.9
VDD_DRAM 1.0 2500
VDD_VPU 0.9/1.0 1000
VDD_GPU 0.9/1.0 2000
VDD_ARM 0.9/1.0 4000
VDDA_1P8_xxx 1.8 250
VDDA_DRAM 1.8 50
NVCC_3V3 3.3 150
NVCC_1V8 1.8 100
NVCC_DRAM 1.1/1.2/1.35
NVCC_SD2 1.8/3.3 700
1.8V PHY 1.8 50
0.9V PHY 0.9 250
3.3V PHY 3.3 100
POR_B
VDD_3V3
VDD_1V8
LPDDR4
VDD1
VDD2/VDDQ
eMMC
VCCQ 1V8 IO
VCC
TYPE C
TI TPS65983B
B1 VDDIO 3V3 IO
H1 VIN_3V3
8mA
TYPE C
TI HD3SS460
23 VCC 1V8 IO
SENSOR
ST LSM9DS1
1,3 VDDIO
22,23 VDD 1V8 IO
SENSOR
VISHAY VCNL4040
HALL AH3663
3 VDD 1V8 IO
5mA
IR 200mA
WiFi/BT
M.2 RS9116
1V8 SDIO, I2S, UART
Smart Card
STM32L432KC 3V3 IO
Camera
2xCamera
USB HUB
+ MicroSD
USB2642
LDO
TPS78001
3.3V/150mA
100uA
67mA
GNSS LIV3F
8 VDD 7 VDDIO;3V3 IO
NFC con
SWITCH
AP2281
3.3V/4A
3000mA
4G M.2
DCDC BOOST
TI LM36922 20V/50mA
50mA
TFT Backlight
5.7'' TFT
5.7'' TP
DCDC BOOST
TI TPS65132S
+5.5V/15mA -5.5V/15mA
50mA
SWITCH
NMOS
DCDC BOOST
TI LM3560 2x1000mA
2x1000mA
FLASH Light
2x2W White LED
AUDIO Decode
WM8962
800mA
SWITCH
N MOS
MIC SWITCH
AP2281
KEY
MOTOR
SWITCH
AP2281
260mA
SWITCH
PMOS
SWITCH
AP2302
SWITCH
NMOS
SWITCH
PMOS
LDO
LDCL015MR
2.8V/150mA
2x53mA
DCDCBUCK
TPS62067-Q1 1.05V/2A
i.MX8M
NVCC_x
_JTAG 3V3 VDD_3V3 JTAG
_NAND1 1V8 VDD_1V8
_NAND2 1V8 VDD_1V8
_SAI1_1 3V3 VDD_3V3 BOOT
_SAI1_2 3V3 VDD_3V3 BOOT
_SAI2 1V8 VDD_1V8 AUDIO
_SAI3 1V8 VDD_1V8 BT
_SAI5 1V8 VDD_1V8 4G
_GPIO1 3V3 VDD_3V3
_GPIO2 3V3 VDD_3V3
_I2C 1V8 VDD_1V8 _I2C2,3,4
_UART 3V3 VDD_3V3 SC Card GPS
_ECSPI 3V3 VDD_3V3 SPI FLASH BT
_SD1_1 1V8 VDD_1V8 EMMC
_SD1_2 1V8 VDD_1V8 EMMC
_SD2 1V8 VDD_1V8 WIFI
_ENET 1V8 VDD_1V8
I2C
I2C1 PMIC BD71837 0x08 3V3 55*
TYPEC-PD TPS65983B 0x0F 3V3 B1*
RTC RV-4162-C7 0x68 3V3
I2C2 Light VCNL4040 0x60 1V8
FLASH LM3560 0xA6,0xA7 1V8
AGM sensor LSM9DS1 0x6A,0x1E 1V8 1,3*
TFT BAIS TPS65132S 0x7C 1V8
I2C3 CAMERA1 0x20,0x21 1V8
TP 0x70 1V8
CODEC WM8962 0x34 1V8 G3*
BackLight LM36922 0x36 1V8
I2C4 BAT MAX17055 0x36 1V8
CHARGE BQ25895 0x6A 1V8
CAMERA2 0x20,0x21 1V8
EXT CON 1V8
Purism
Drawing Title: Librem 5
Page Title: POWER TREE
Rev: v1.0.2
Date:
Design by:
Sheet 2 of 21

i.MX8M PWR

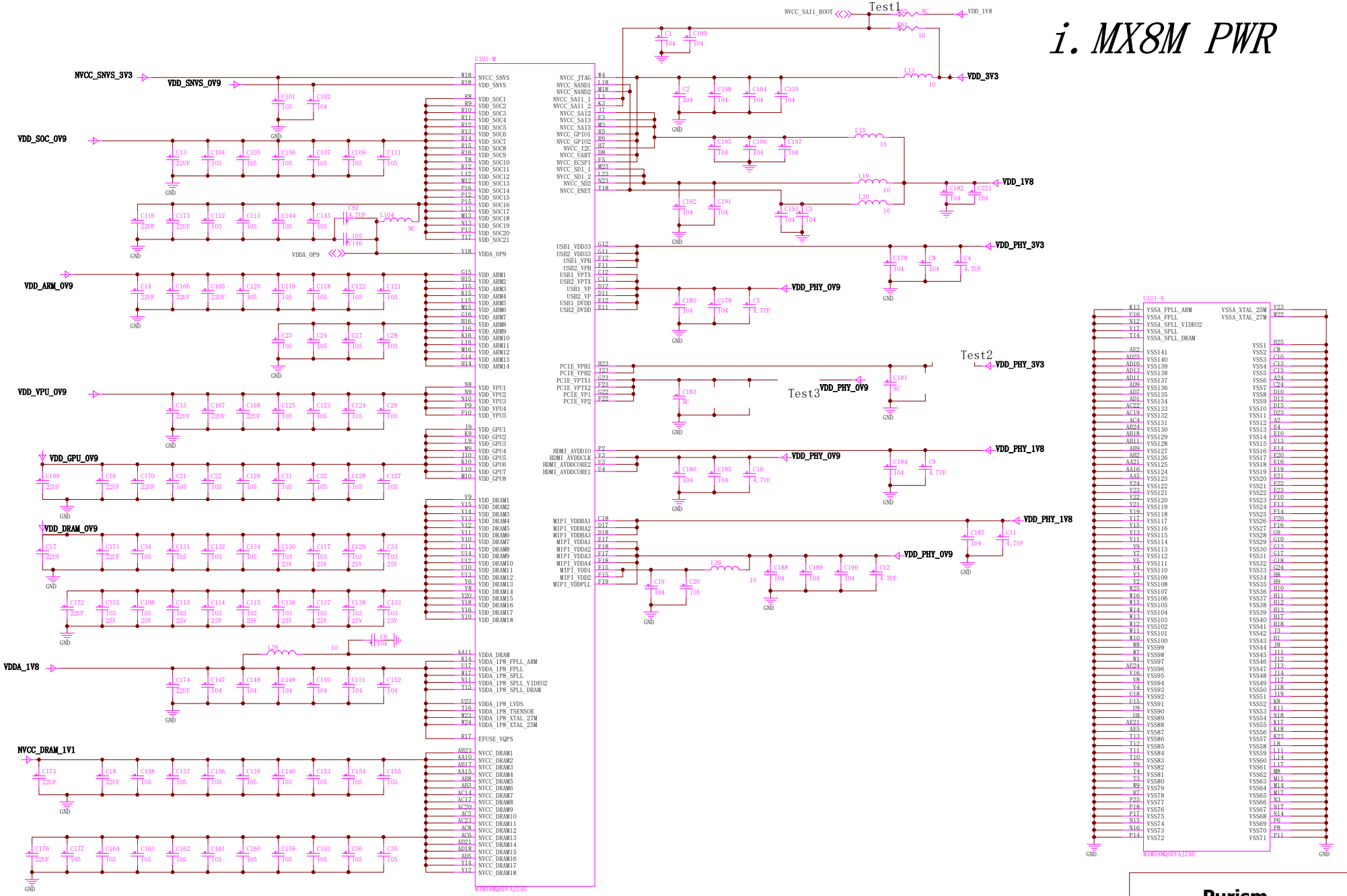

Drawing Title:	**Librem 5**
Page Title:	CPU POWER
Rev:	v1.0.2
Date:	
Design by:	
Sheet	3 of 21

Purism

LPDDR4

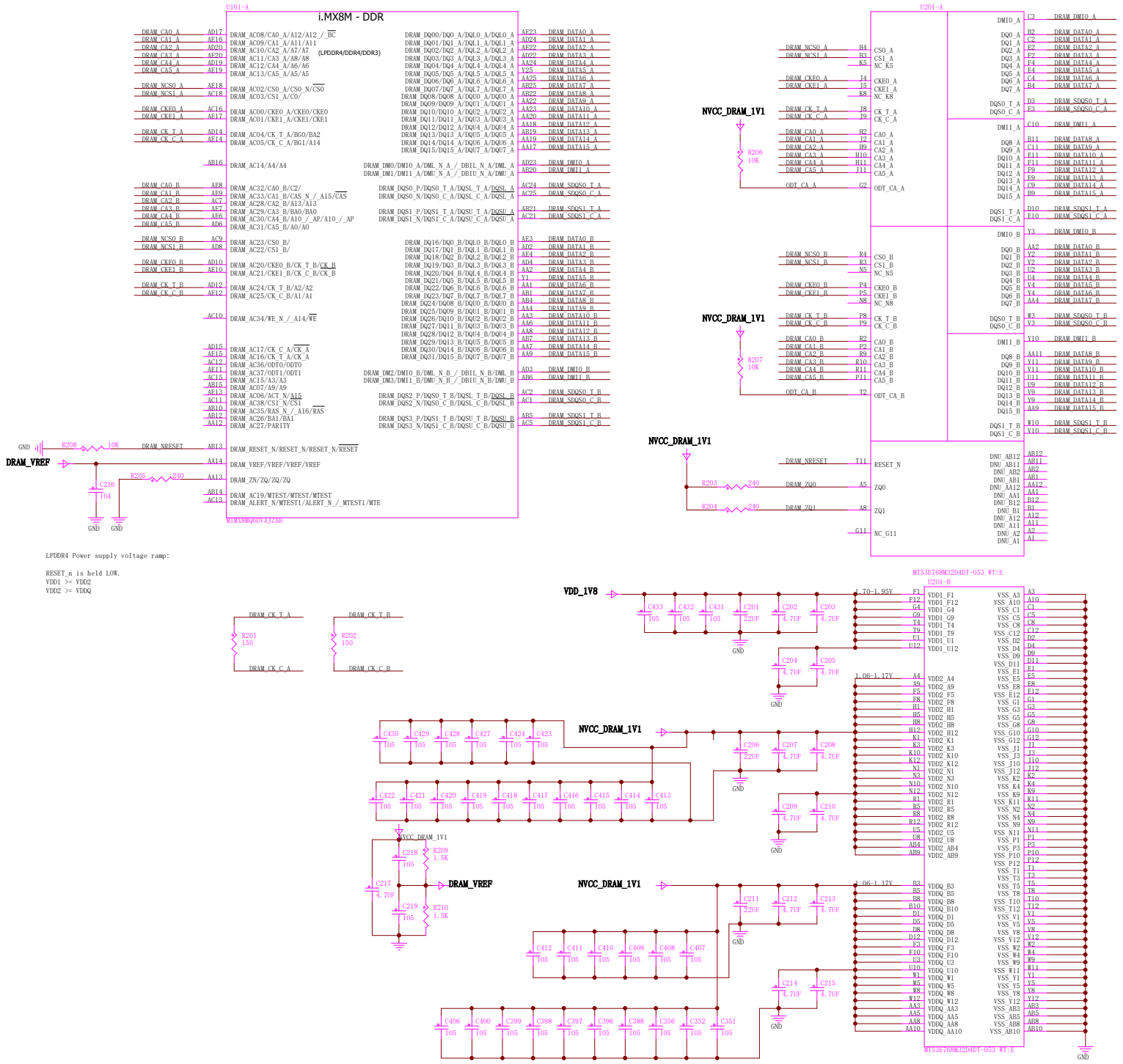

Purism

Drawing Title: **Librem 5**

Page Title: **LPDDR4**

Rev:	Date:	Design by:
v1.0.2		

Sheet 4 of 21

MIMX8MQ6DVAJZAA

U101-H

i.MX8M - NAND

NVCC_NAND

NAND_CE0_B	H19	PD 90k	4G_RESET
NAND_CE1_B	G21	PD 90k	CHG_EN
NAND_CE2_B	F21	PD 90k	CHG_INT
NAND_CE3_B	H20	PD 90k	CHG_OTG_OUT_EN
NAND_ALE	G19	PD 90k	
NAND_CLE	H21	PD 90k	PWR_KEY
NAND_RE_B	K19	PD 90k	4G_WAKE
NAND_WE_B	K22	PD 90k	
NAND_WP_B	K21	PD 90k	4G_PWR_EN
NAND_READY_B	K20	PD 90k	4G_W_DISABLE
NAND_DQS	M20	PD 90k	BACKLINGE_EN
NAND_DATA00	G20	PD 90k	
NAND_DATA01	J20	PD 90k	INT_LIGHT
NAND_DATA02	H22	PD 90k	
NAND_DATA03	J21	PD 90k	HEADPHONE_DET_1V8
NAND_DATA04	L20	PD 90k	WIFI3V3_EN
NAND_DATA05	J22	PD 90k	TF_NCD
NAND_DATA06	L19	PD 90k	GPS3V3_EN
NAND_DATA07	M19	PD 90k	4G_W_DIS2

MIMX8MQ6DVAJZAB

U101-I

i.MX8M - eNET

NVCC_ENET

ENET_MDC	N20	PD 90k	VOL+
ENET_MDIO	N19	PD 90k	VOL-
ENET_TX_CTL	P19	PD 90k	
ENET_TXC	T19	PD 90k	FLASH_EN
ENET_TD0	R20	PD 90k	FLASH_STROBE
ENET_TD1	R21	PD 90k	DSI_BAIS_EN
ENET_TD2	R19	PD 90k	
ENET_TD3	P20	PD 90k	HALL
ENET_RX_CTL	T21	PD 90k	TP_RST
ENET_RXC	T20	PD 90k	CSI1_NRST
ENET_RD0	U19	PD 90k	CSI2_NRST
ENET_RD1	U21	PD 90k	TP_NINT
ENET_RD2	U20	PD 90k	DSI_TE
ENET_RD3	V19	PD 90k	DSI_RST

MIMX8MQ6DVAJZAB

-Internal pulldown resistor of 90kOhm is always enabled

U101-I

i.MX8M - SD

NVCC_SD1

NVCC_SD2

SD1_CLK	L25	SD1_CLK	
SD1_CMD	L24	SD1_CMD	
SD1_DATA0	M25	SD1_DATA0	
SD1_DATA1	M24	SD1_DATA1	
SD1_DATA2	N25	SD1_DATA2	
SD1_DATA3	P25	SD1_DATA3	
SD1_DATA4	N24	SD1_DATA4	
SD1_DATA5	P24	SD1_DATA5	
SD1_DATA6	R25	SD1_DATA6	
SD1_DATA7	T25	SD1_DATA7	
SD1_NRST	R24	SD1_RESET_B	
SD1_STROBE	T24	SD1_STROBE	
SD2_CLK	L22	SD2_CLK	
SD2_CMD	M22	SD2_CMD	
SD2_DATA0	N22	SD2_DATA0	
SD2_DATA1	N21	SD2_DATA1	
SD2_DATA2	P22	SD2_DATA2	
SD2_DATA3	P21	SD2_DATA3	
SD2_WP	M21	SDIO_WAKE	
SD2_CD_B	L21	SD2_NCD	
SD2_RESET_B	R22	SD2_NRST	

MIMX8MQ6DVAJZAB

VDD_1V8

R31 47K

3V3_WIFI

Q8 RYU002N05

U101-G -Internal pulldown resistor of 90kOhm is always enabled

i.MX8M - SAI

NVCC_SAI1

NVCC_SAI2

NVCC_SAI3

BT_REG_ON	K4	SAI5_MCLK	
CHG_USB_DSEL	N4	SAI5_RXFS	
BAT_LOW	L5	SAI5_RXC	
	M5	SAI5_RXD0	
INT_M/A/G	L4	SAI5_RXD1	
	M4	SAI5_RXD2	
TYPEC_HRESET	K5	SAI5_RXD3	
LED_G	D3	SAI3_MCLK	
SAI3_TXFS	G3	SAI3_TXFS	
SAI3_TXC	C4	SAI3_TXC	
SAI3_TXD	C3	SAI3_TXD	
NFC_EN	G4	SAI3_RXFS	
WIFI_REG_ON	F4	SAI3_RXC	
SAI3_RXD	F3	SAI3_RXD	
LED_R	F6	SPDIF_TX	
	G6	SPDIF_RX	
MOTO	E6	SPDIF_EXT_CLK	
SAI1_MCLK	A3	BT_WAKE	
SAI1_TXFS	H1	HSW_WIFI_STATE	
SAI1_TXC	E1	NFC_IRQ	
SAI1_TXD0	F2	SAI1_TXD0	
SAI1_TXD1	E2	SAI1_TXD1	
SAI1_TXD2	B2	SAI1_TXD2	
SAI1_TXD3	D1	SAI1_TXD3	
SAI1_TXD4	D2	SAI1_TXD4	
SAI1_TXD5	C2	SAI1_TXD5	
SAI1_TXD6	B3	SAI1_TXD6	
SAI1_TXD7	C1	SAI1_TXD7	
SAI1_RXFS	L1	HSW_4G_STATE	
SAI1_RXC	K1	HSW_CA_STATE	
SAI1_RXD0	K2	SAI1_RXD0	
SAI1_RXD1	L2	SAI1_RXD1	
SAI1_RXD2	H2	SAI1_RXD2	
SAI1_RXD3	J2	SAI1_RXD3	
SAI1_RXD4	J1	SAI1_RXD4	
SAI1_RXD5	F1	SAI1_RXD5	
SAI1_RXD6	G2	SAI1_RXD6	
SAI1_RXD7	G1	SAI1_RXD7	
SAI2_MCLK	H5	SAI2_MCLK	
SAI2_TXFS	H4	SAI2_TXFS	
SAI2_TXC	J5	SAI2_TXC	
SAI2_TXD0	G5	SAI2_TXD	
SAI2_RXFS	L4		
SAI2_RXC	H3		
SAI2_RXD0	H6	SAI2_RXD	SAI2_RXD

1.8V

1.8V

MIMX8MQ6DVAJZAB

UART DBG

U101-K

NVCC_ENET

NVCC_ECSPI1

NVCC_ECSPI2

NVCC_I2C

NVCC_GPIO1

UART1_RXD	C7	UART1_RXD	
UART1_TXD	A7	UART1_TXD	
UART2_RXD	B6	UART2_RXD	
UART2_TXD	D6	UART2_TXD	
UART3_RXD	A6	UART3_RXD	
UART3_TXD	B7	UART3_TXD	
SPI_SS1	C6	UART4_RXD	
SMC_BOOT0	D7	UART4_TXD	
I2C1_SCL_1V8	E7	I2C1_SCL	
I2C1_SDA_1V8	E8	I2C1_SDA	
I2C2_SCL	G7	I2C2_SCL	
I2C2_SDA	F7	I2C2_SDA	
I2C3_SCL	G8	I2C3_SCL	
I2C3_SDA	F9	I2C3_SDA	
I2C4_SCL	F8	I2C4_SCL	
I2C4_SDA	F9	I2C4_SDA	
ECSPI1_SS0	D4	FLASH_SS	
ECSPI1_MOSI	A4	FLASH_MOSI	
ECSPI1_MISO	B4	FLASH_MISO	
ECSPI1_SCLK	D5	FLASH_SCK	
ECSPI2_SS0	A5	UART4_RTS	
ECSPI2_MOSI	E5	UART4_TXD	
ECSPI2_MISO	B5	UART4_CTS	
ECSPI2_SCLK	C5	UART4_RXD	
GPIO1_IO00	T6	CAMERA_PWR_EN_3V3	
GPIO1_IO01	T7		
GPIO1_IO02	R4	NWDOG	
GPIO1_IO03	P4	TP_PWR_3V3_EN	
GPIO1_IO04	P5	AUDIO_POWER_EN_3V3	
GPIO1_IO05	P7	DSI_EN_3V3	
GPIO1_IO06	N5	SMC_PWR_3V3_EN	
GPIO1_IO07	N6	PMIC_NINT	
GPIO1_IO08	N7	GPS_RST	
GPIO1_IO09	M6	RTC_INT	
GPIO1_IO10	M7	TCPC_NINT	
GPIO1_IO11	L6	TYPEC_MUX_EN	
GPIO1_IO12	L7	HUB_RESET	
GPIO1_IO13	K6	LED_B	
GPIO1_IO14	K7	HUB_PWR_3V3_EN	
GPIO1_IO15	J6	CLKO2	

3V3

1.8V

3.3V

MIMX8MQ6DVAJZAB

VDD_3V3 D16 RB751G-40 C46 4.7UF RB751G-40 PMIC_5V D20 C68 225 25V

VDD_1V8 NVCC_SNVS_3V3

R302 2.2K R2 4.7K

I2C1_SDA_1V8 I2C1_SDA

RYU002N05 Q4

U5 NC GND

A4 A3 A2 A1 VCCA B4 B3 B2 B1 VCCB /OE

VDD_1V8 NVCC_SNVS_3V3

R301 2.2K R3 4.7K

I2C1_SCL_1V8 I2C1_SCL

RYU002N05 Q5

VDD_1V8

R303 2.2K I2C2_SCL

R304 2.2K I2C2_SDA

R305 2.2K I2C3_SCL

R306 2.2K I2C3_SDA

R307 2.2K I2C4_SCL

R308 2.2K I2C4_SDA

Purism		
Drawing Title: **Librem 5**		
Page Title: **CPU IO**		
Rev: **v1.0.2**	Date:	Design by:
		Sheet 5 of 21

RTC

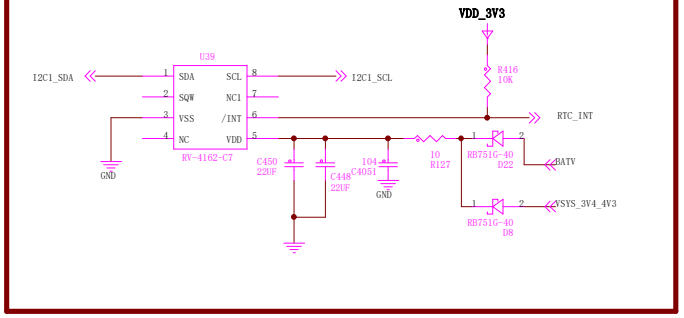

JTAG Debug

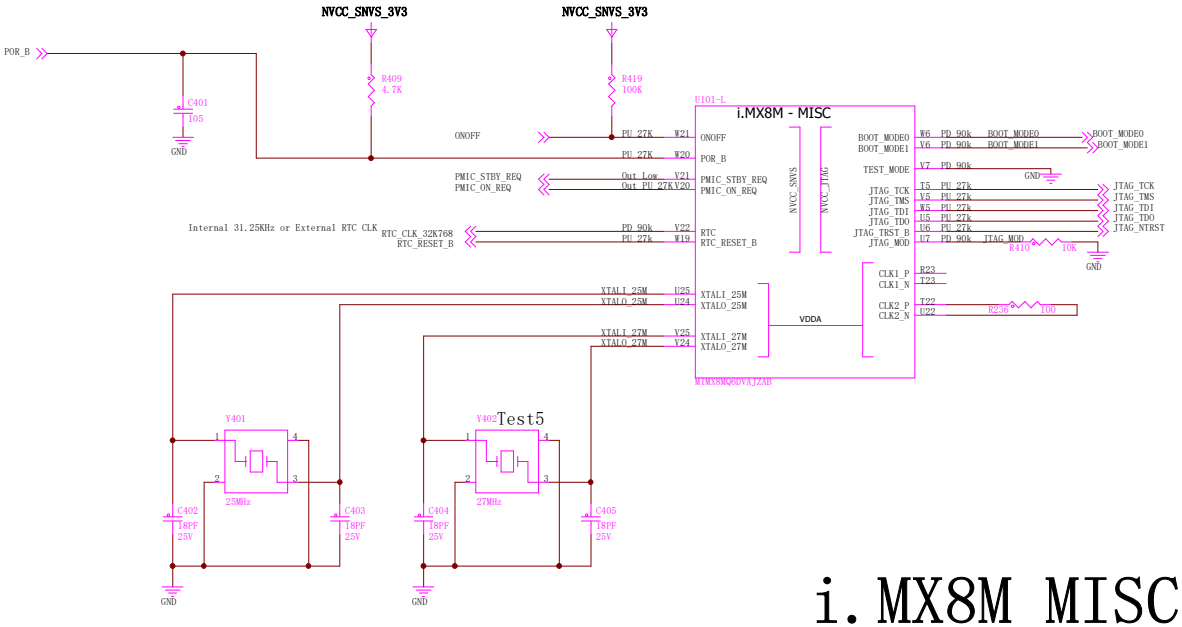

i.MX8M MISC

Purism		
Drawing Title: **Librem 5**		
Page Title: **CPU MISC, RTC**		
Rev: **v1.0.2**	Date:	Design by:
		Sheet 6 of 21

i.MX8M PHY

USB_RESREF: Attach a 200-Ω 1% 100-ppm/C precision resistor-to-ground on the board.
MIPIDSI_REXT: 15K-Ω
PCIE: 200-Ω±1% ± 100 ppm/° C precision resistor to-ground on the board.
HDMI:a 499Ω (±1% tolerance) resistor to-ground on the board

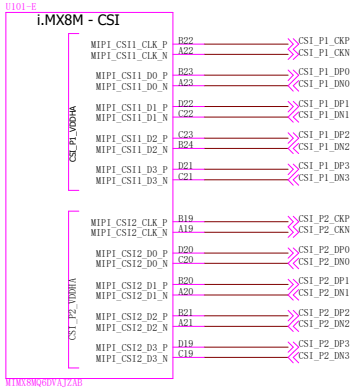

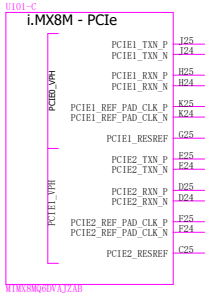

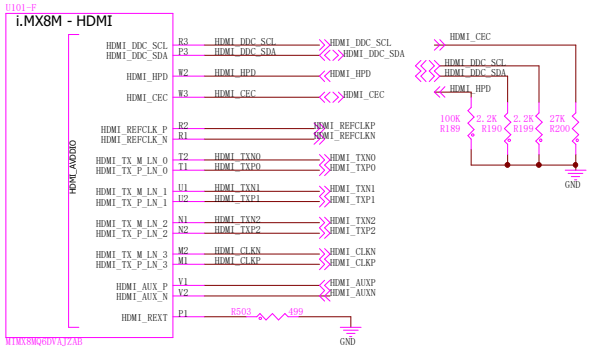

AC coupled differential low swing clock (HCSL levels)

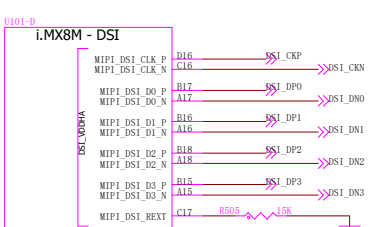

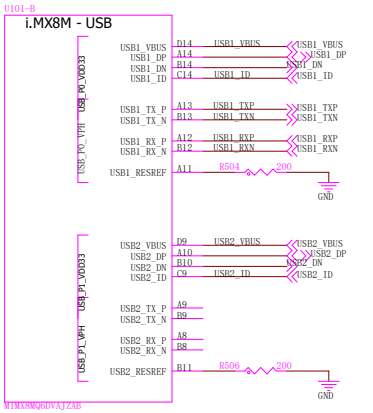

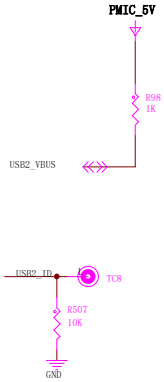

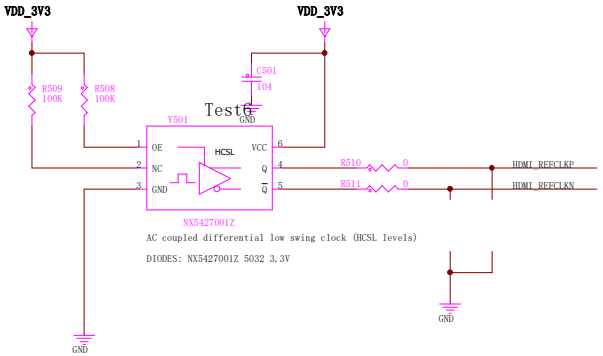

AC coupled differential low swing clock (HCSL levels)

DIODES: NX5427001Z 5032 3.3V

Purism		
Drawing Title: **Librem 5**		
Page Title: **CPU PHY**		
Rev: **v1.0.2**	Date:	Design by:
		Sheet 7 of 21

eMMC 5.0 Footprint

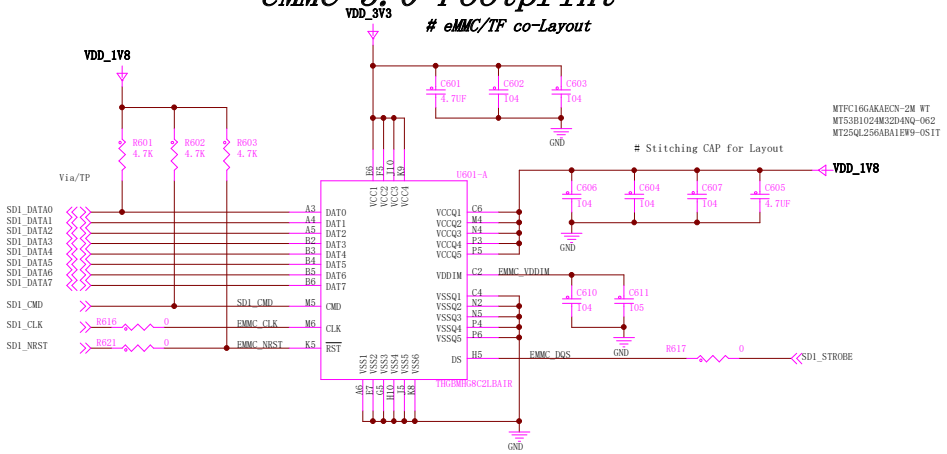

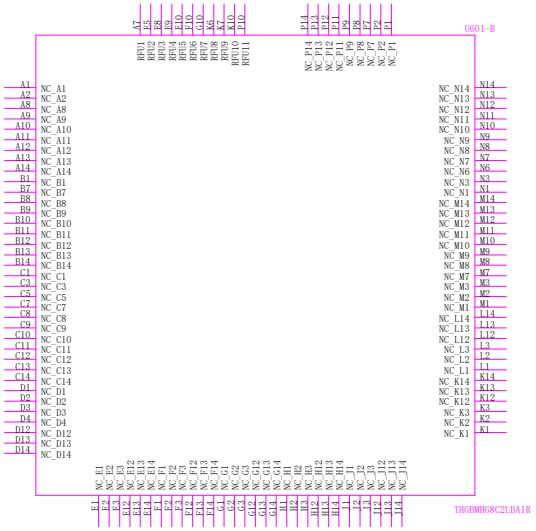

Purism	
Drawing Title:	**Librem 5**
Page Title:	EMMC
Rev: **v1.0.2**	Date:
Design by:	
Sheet 8 of 21	

SYS PMIC/PWR

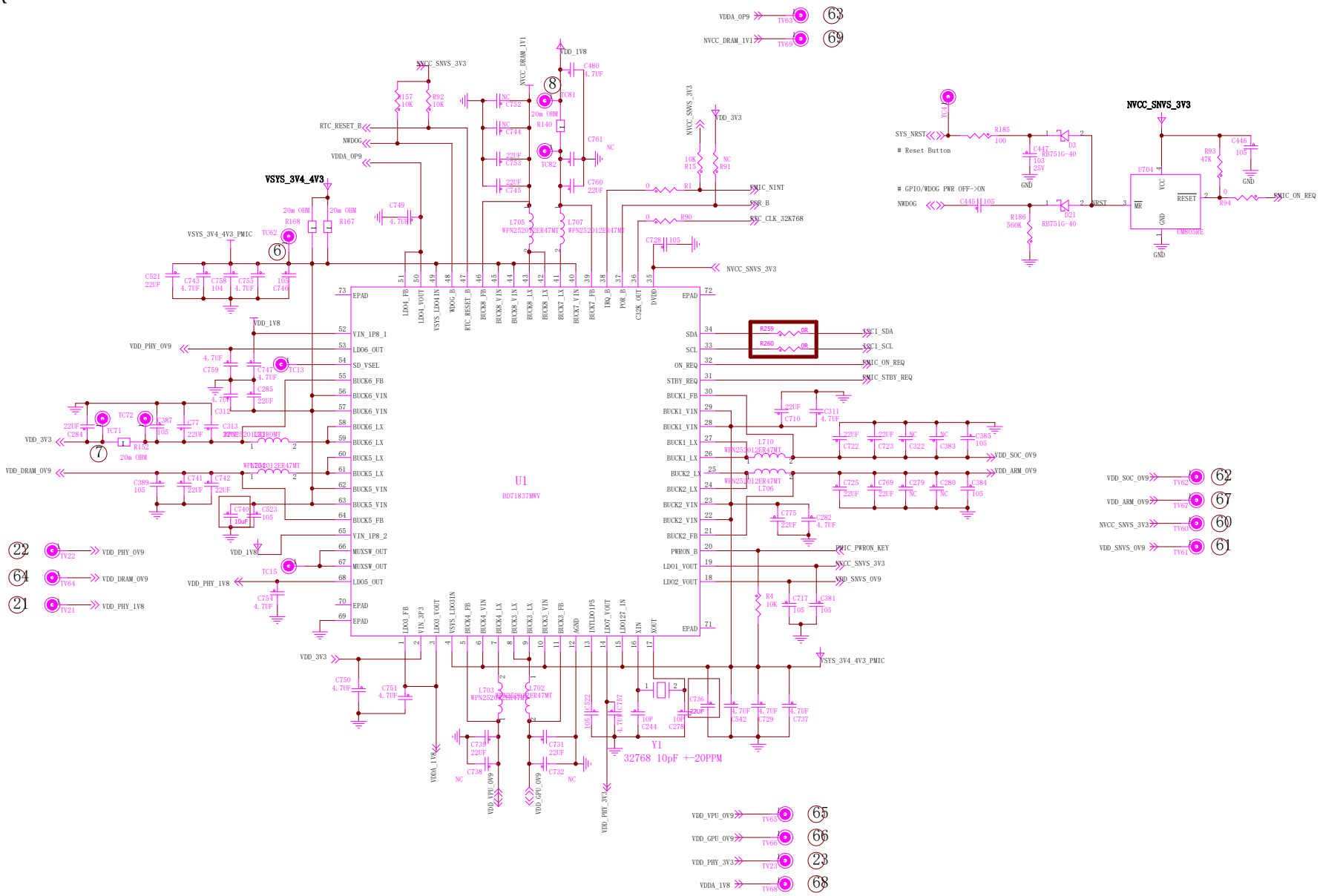

Purism	
Drawing Title:	Librem 5
Page Title:	PMIC
Rev: v1.0.2	Date:
Design by:	
Sheet 9 of 21	

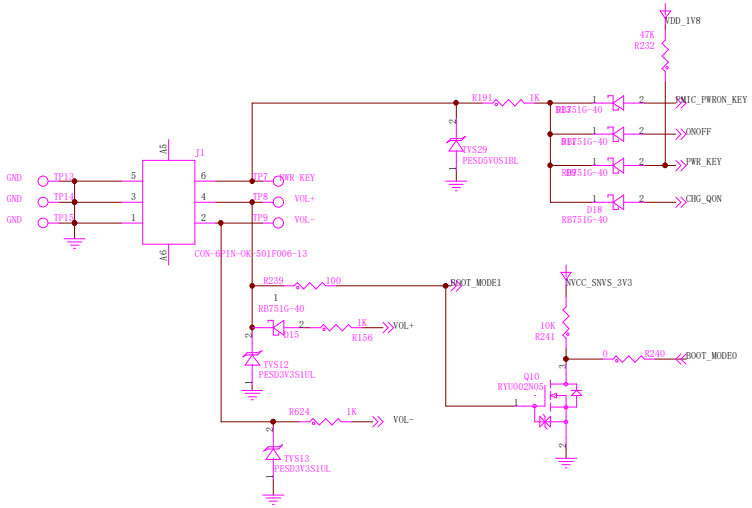

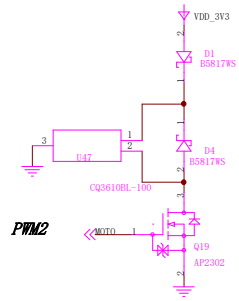

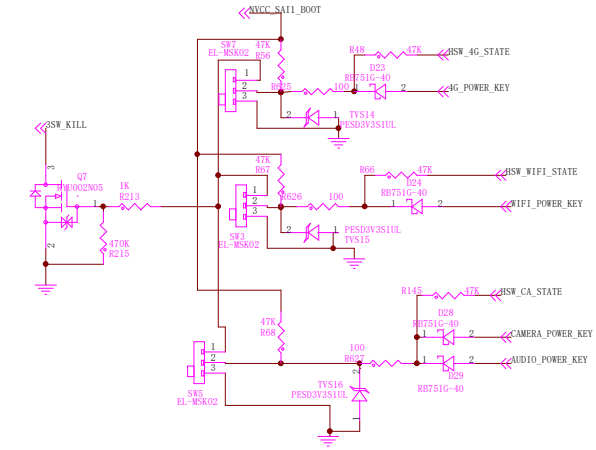

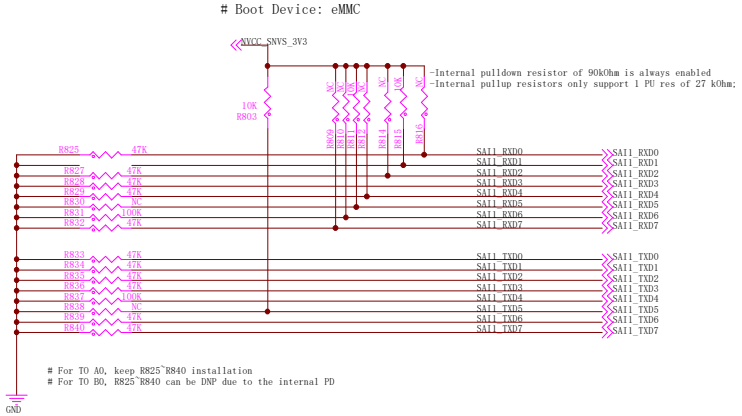

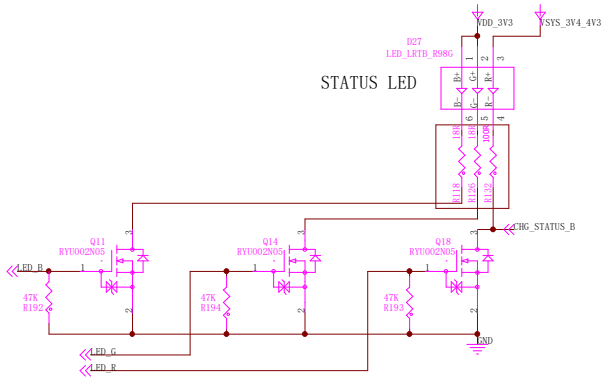

Purism

Drawing Title: **Librem 5**		
Page Title: **BOOT CFG**		
Rev: **v1.0.2**	Date:	Design by:
		Sheet 10 of 21

USB3.0/2.0 TYPE-C/HOST

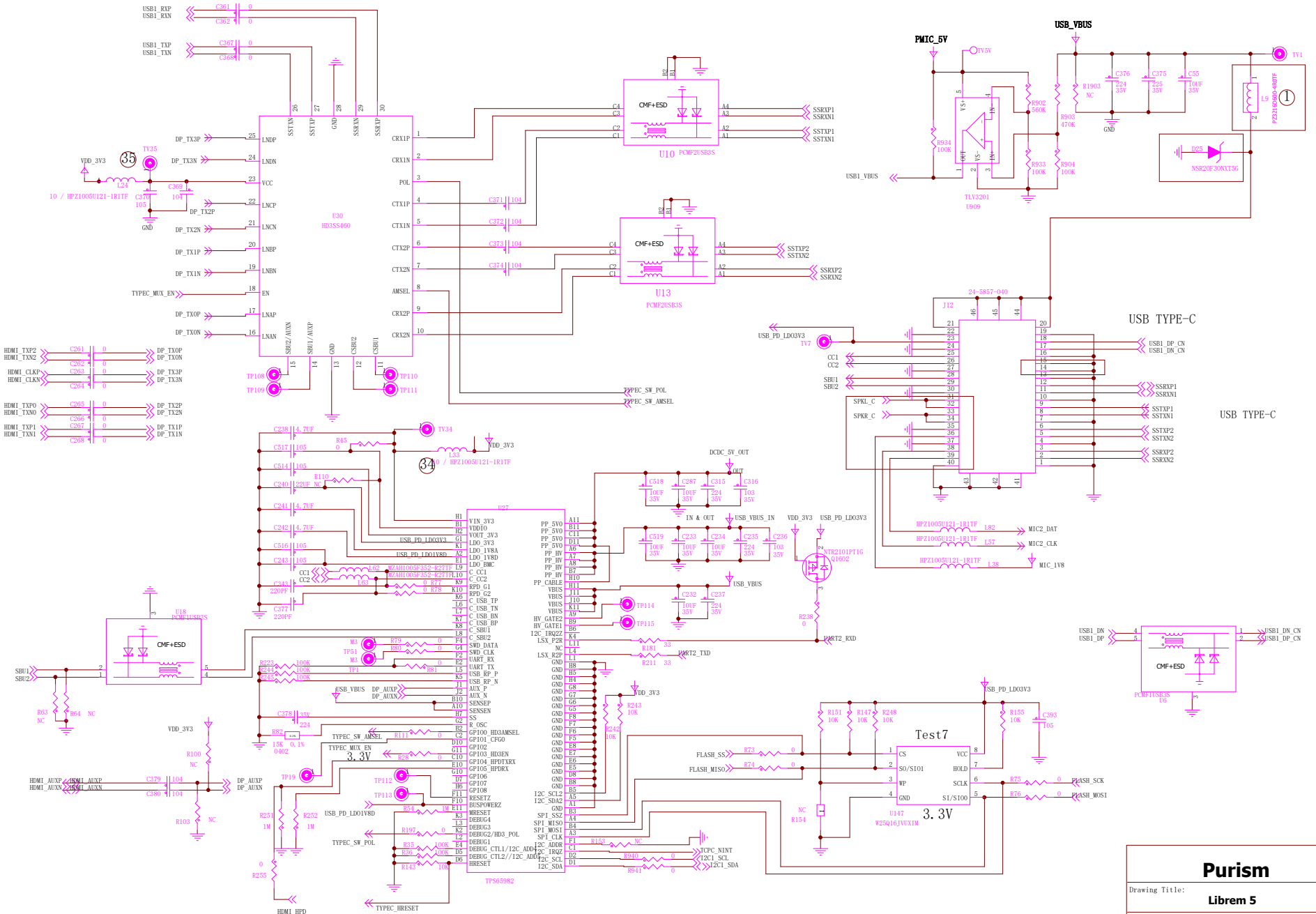

Purism		
Drawing Title: **Librem 5**		
Page Title: **USB TYPE C**		
Rev: **v1.0.2**	Date:	Design by:
		Sheet 11 of 21

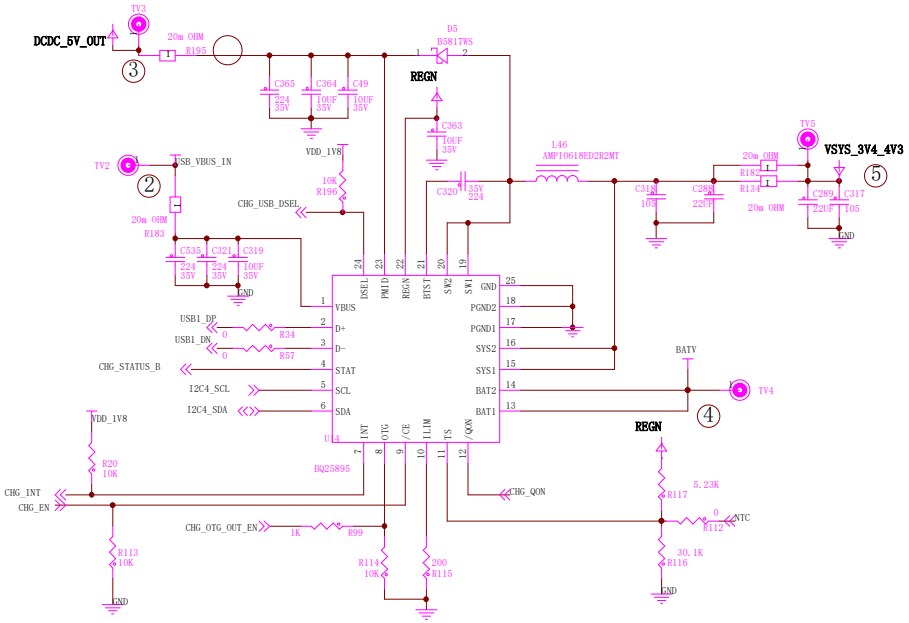

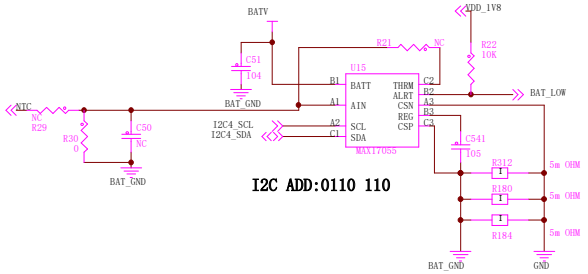

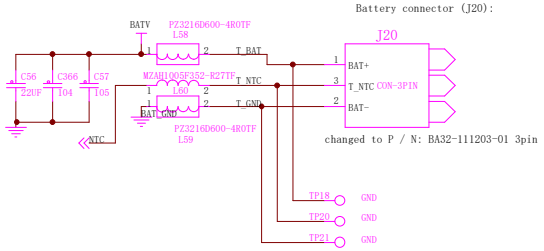

Purism		
Drawing Title: **Librem 5**		
Page Title: CHARGE, BAT, LED		
Rev: **v1.0.2**	Date:	Design by:
		Sheet 12 of 21

Sensor

Light Sensor

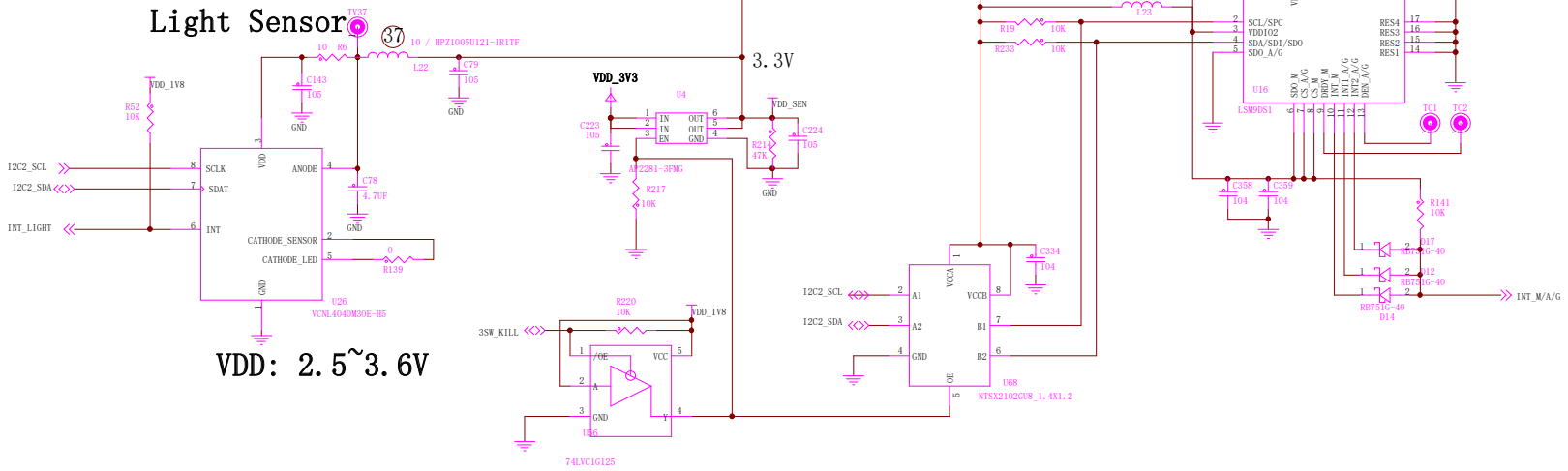

HALL Sensor

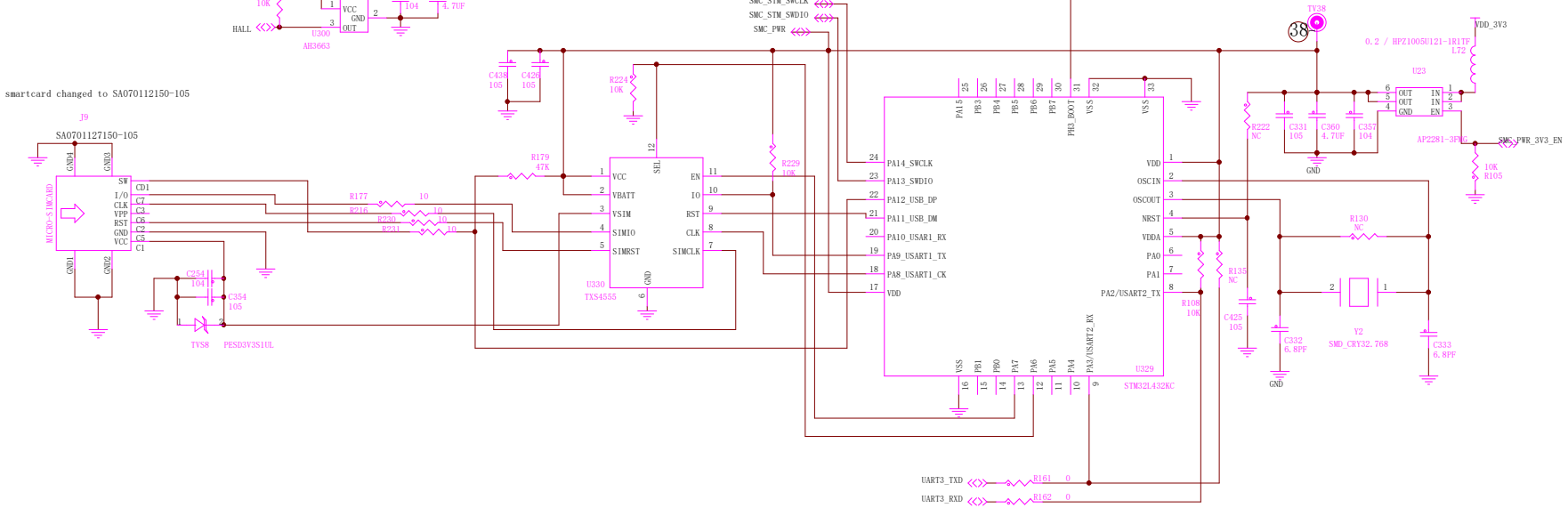

Purism		
Drawing Title: **Librem 5**		
Page Title: **SENSOR, SMART CARD**		
Rev: **v1.0.2**	Date:	Design by:
		Sheet 13 of 21

GNSS

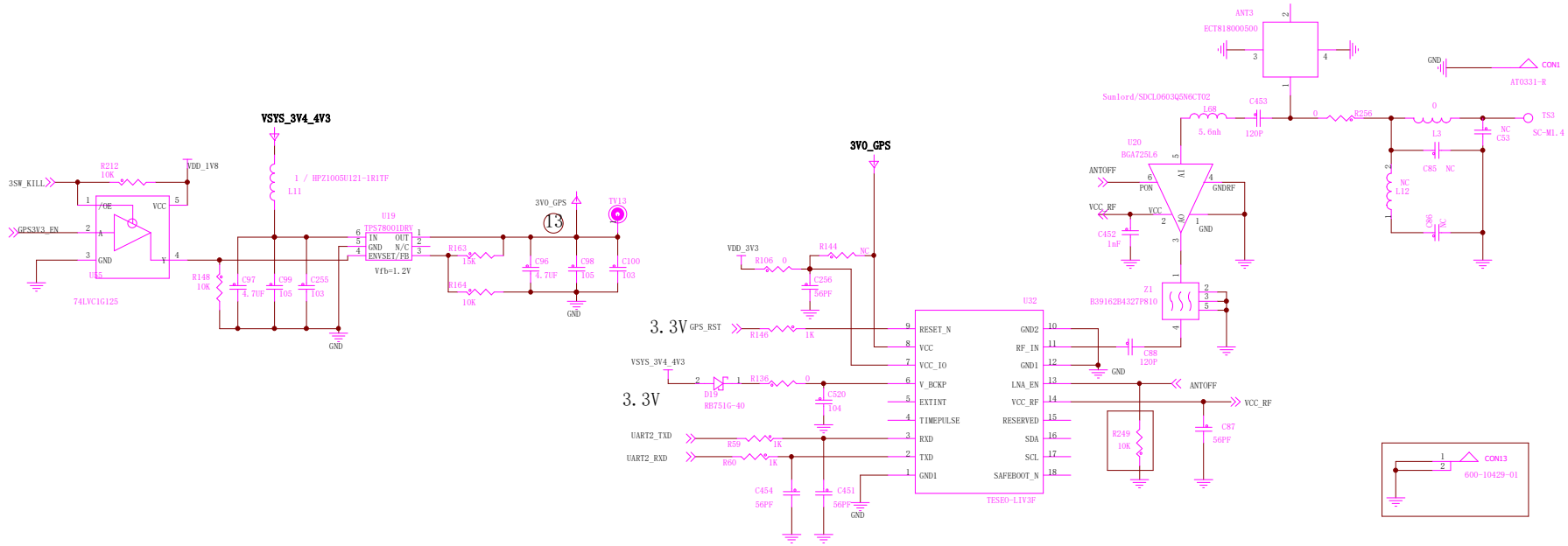

EXT CON

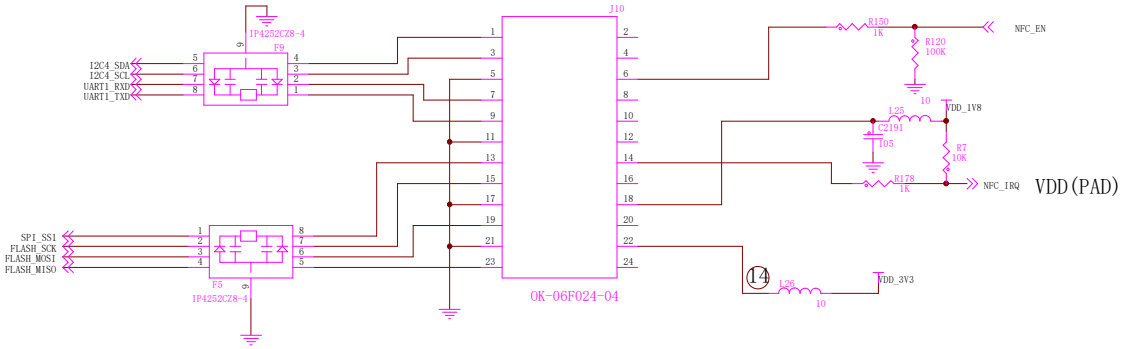

Purism	
Drawing Title:	**Librem 5**
Page Title:	GNSS
Rev: **v1.0.2**	Date:
Design by:	Sheet 14 of 21

WiFi/BT 802.11a/b/g/n/ac + Bluetooth 4.1/ EDR

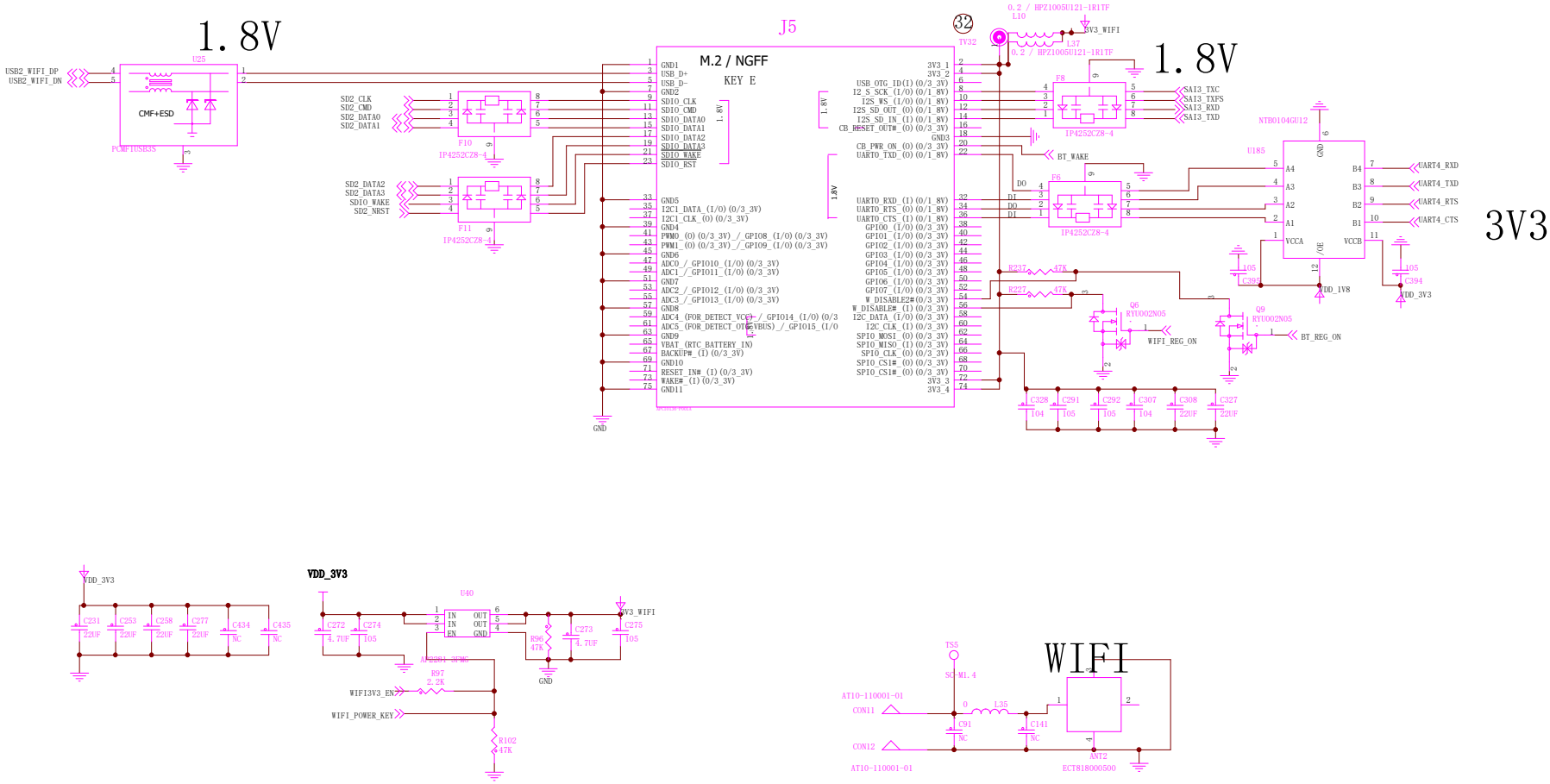

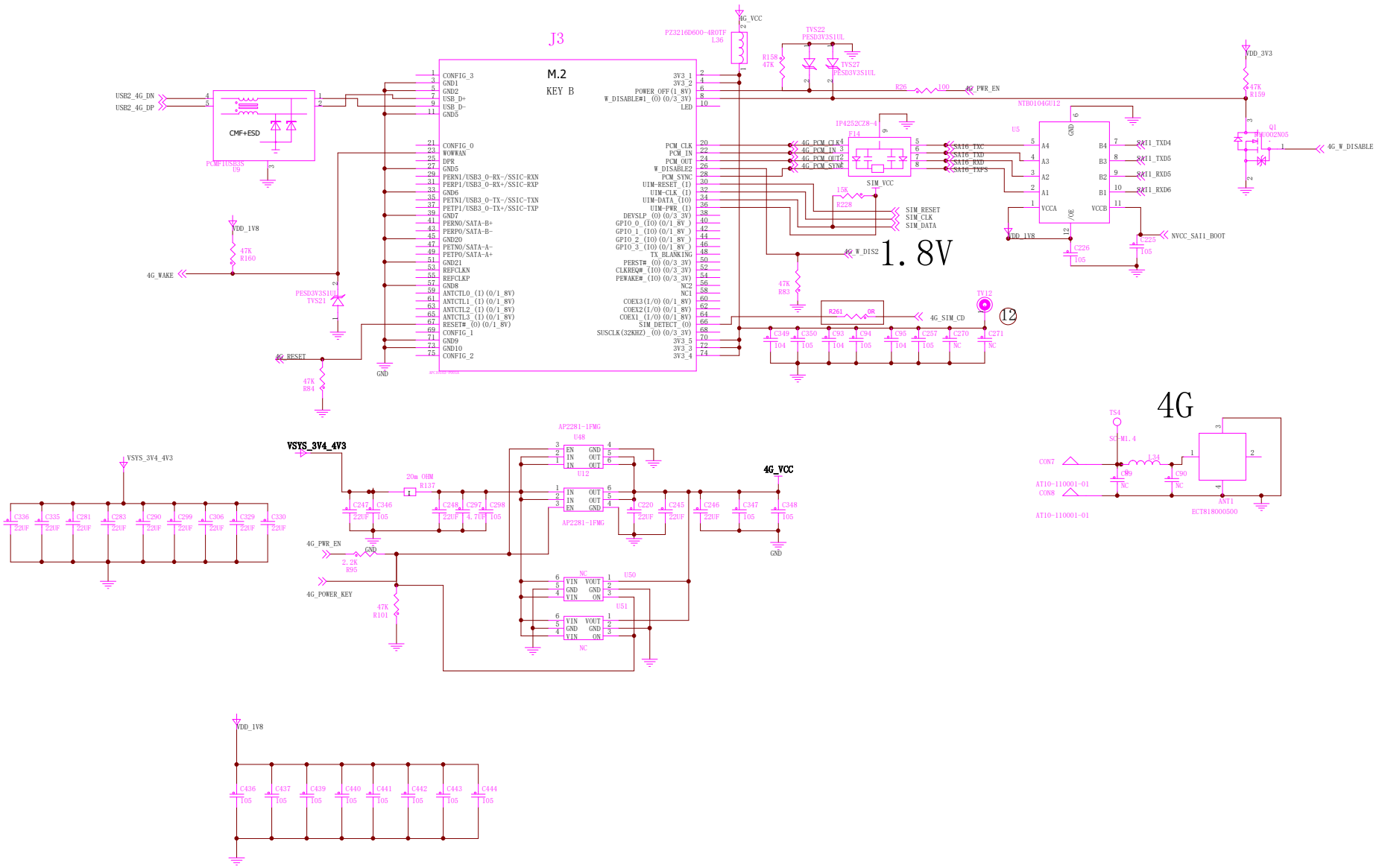

Purism	
Drawing Title:	**Librem 5**
Page Title:	**4G**
Rev: **v1.0.2**	Date:
Design by:	
Sheet 16 of 21	

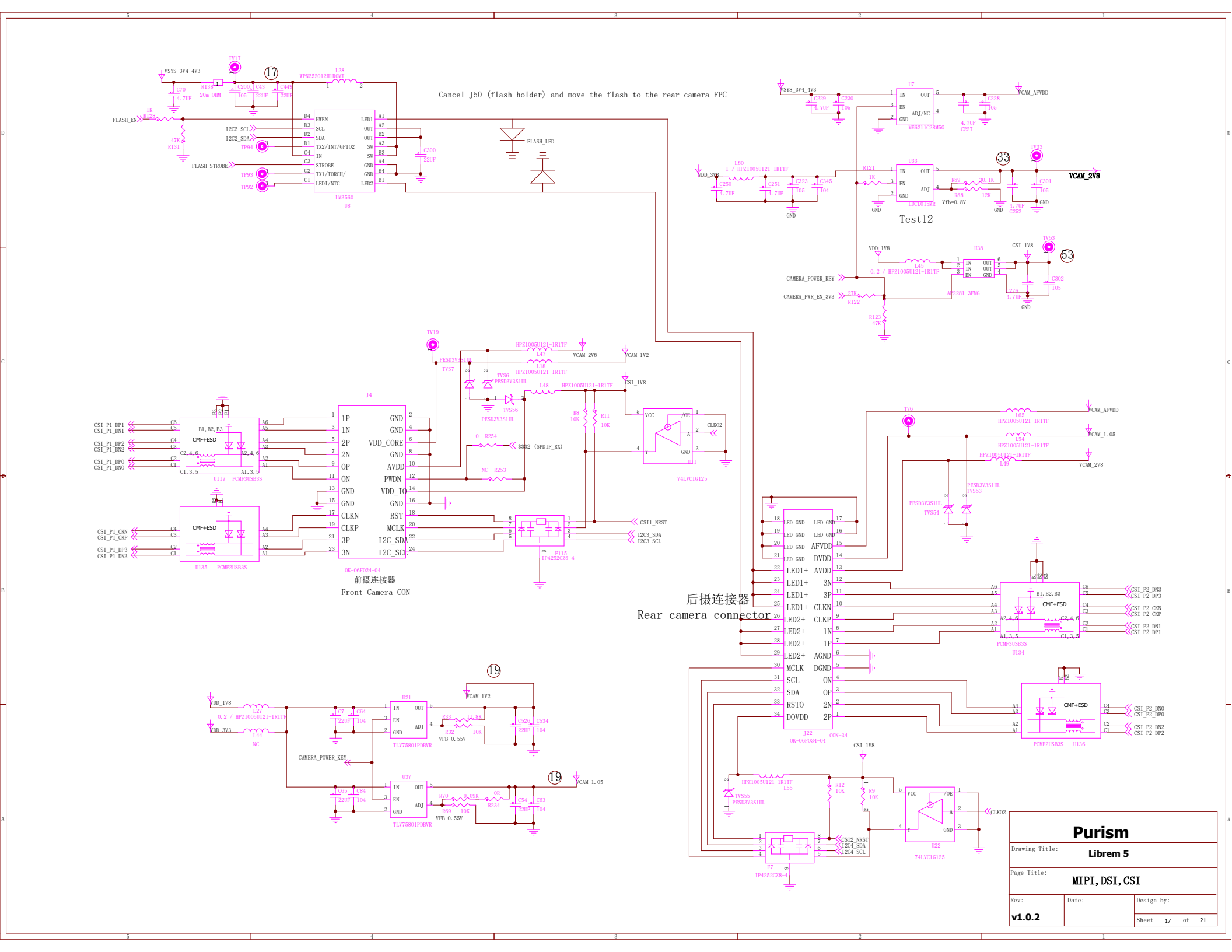
Cancel J50 (flash holder) and move the flash to the rear camera FPC
Test12
前摄连接器
Front Camera CON
后摄连接器
Rear camera connector
Purism
Drawing Title: Librem 5
Page Title: MIPI,DSI,CSI
Rev: v1.0.2
Date:
Design by:
Sheet 17 of 21

DSI LCD IF

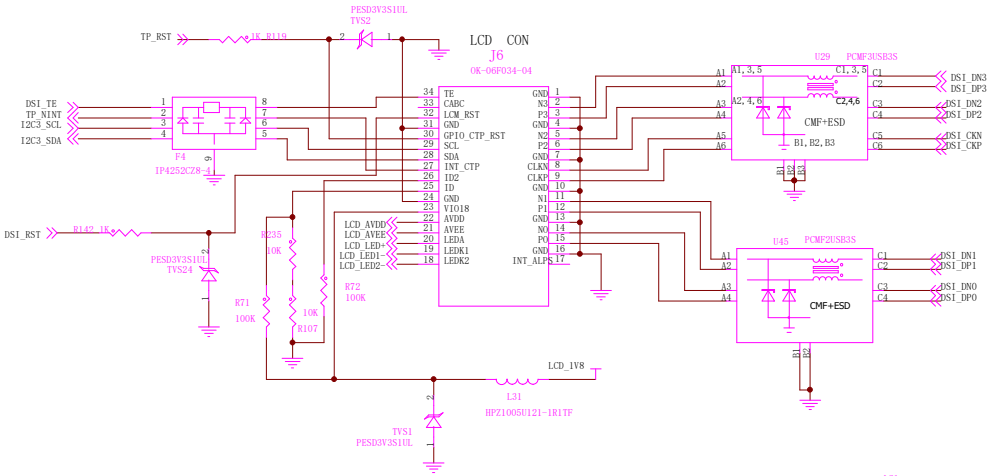

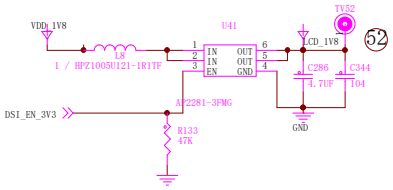

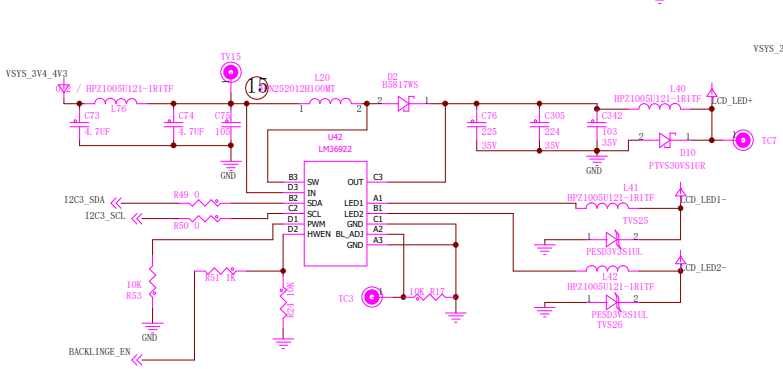

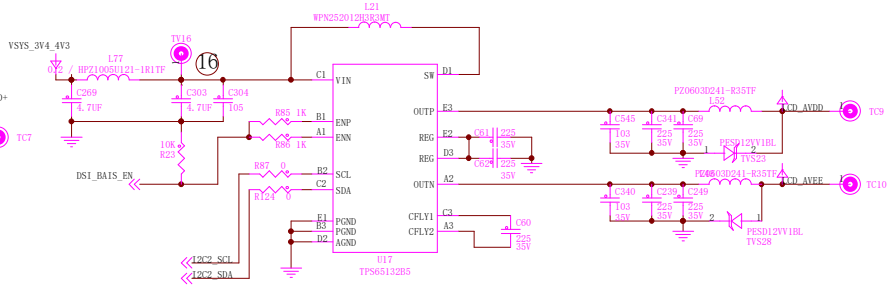

Purism		
Drawing Title: **Librem 5**		
Page Title: **MICROSD,MOTO**		
Rev: **v1.0.2**	Date:	Design by:
		Sheet 18 of 21

USB HUB + SDIO BRIDGE

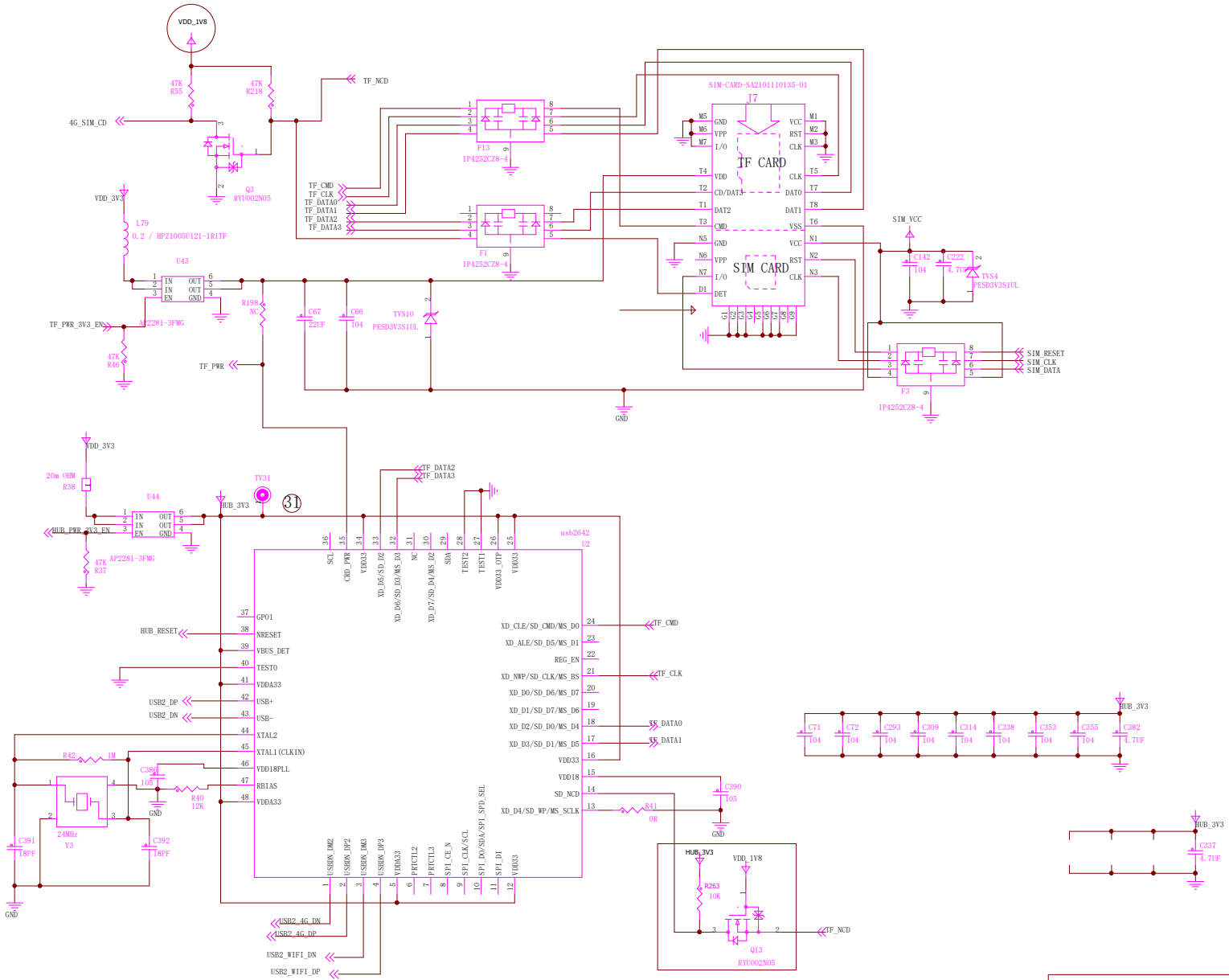

Purism	
Drawing Title:	**Librem 5**
Page Title:	USB HUB
Rev:	**v1.0.2**
Date:	
Design by:	
Sheet 19 of 21	

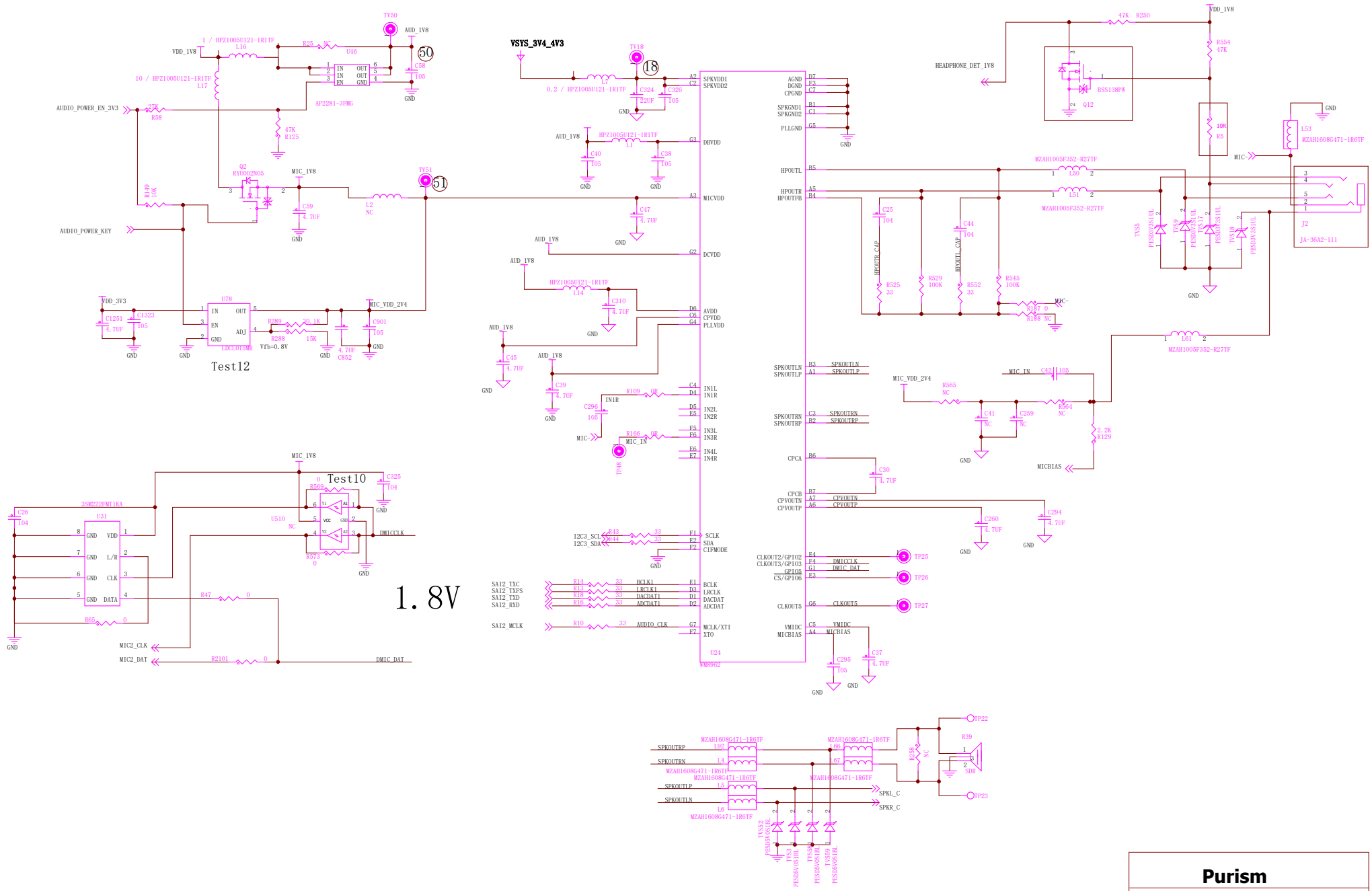

Purism	
Drawing Title:	**Librem 5**
Page Title:	AUDIO
Rev: **v1.0.2**	Date:
Design by:	
Sheet 20 of 21	

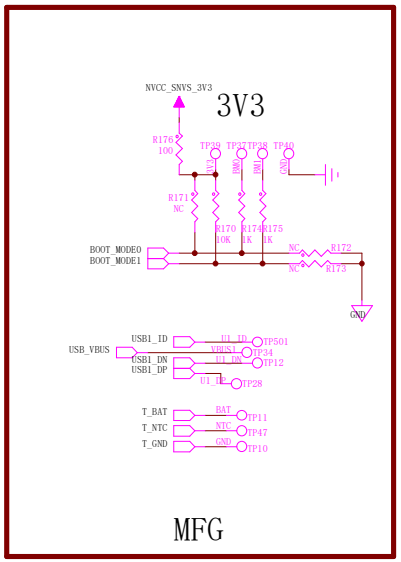

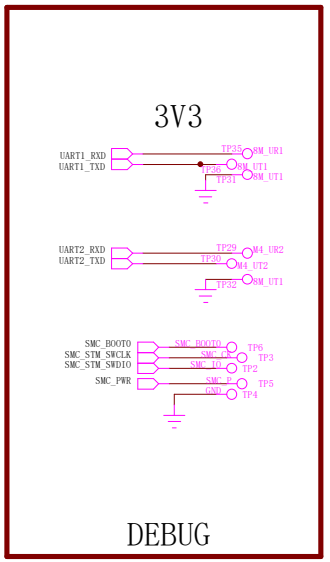

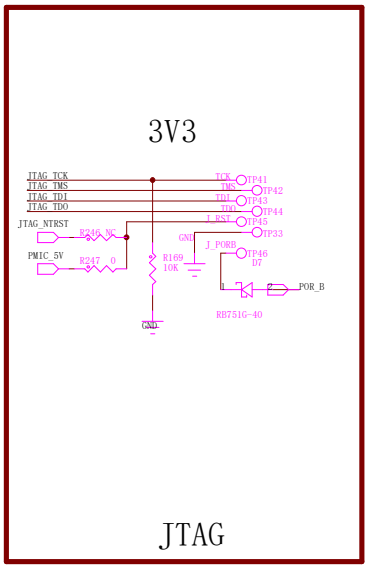

M2 module SCREW

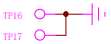

BMODE[1:0]	BOOT TYPE
00	Boot From Fuses
01	Serial Downloader
10	Internal Boot (Development)
11	Reserved

SCREW

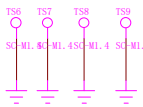

Shielding Case

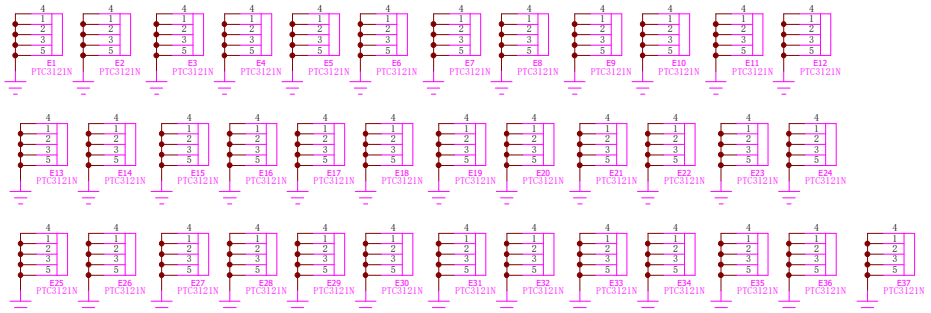

Shielding Case Hold

Purism		
Drawing Title: Librem 5		
Page Title: DEBUG		
Rev: v1.0.2	Date:	Design by:
		Sheet 21 of 21