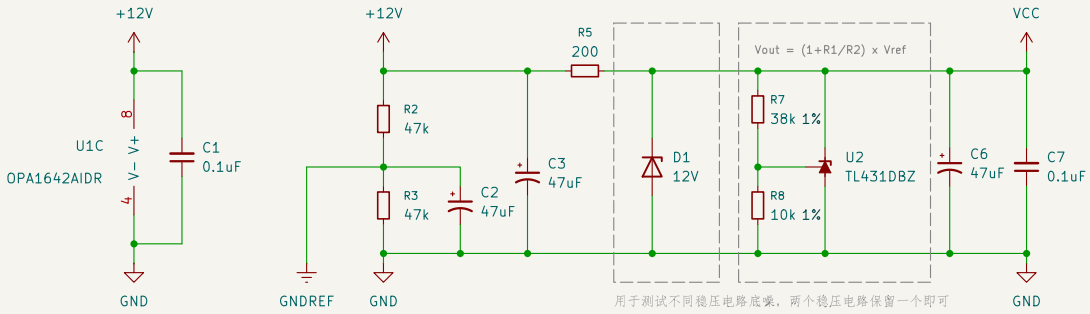

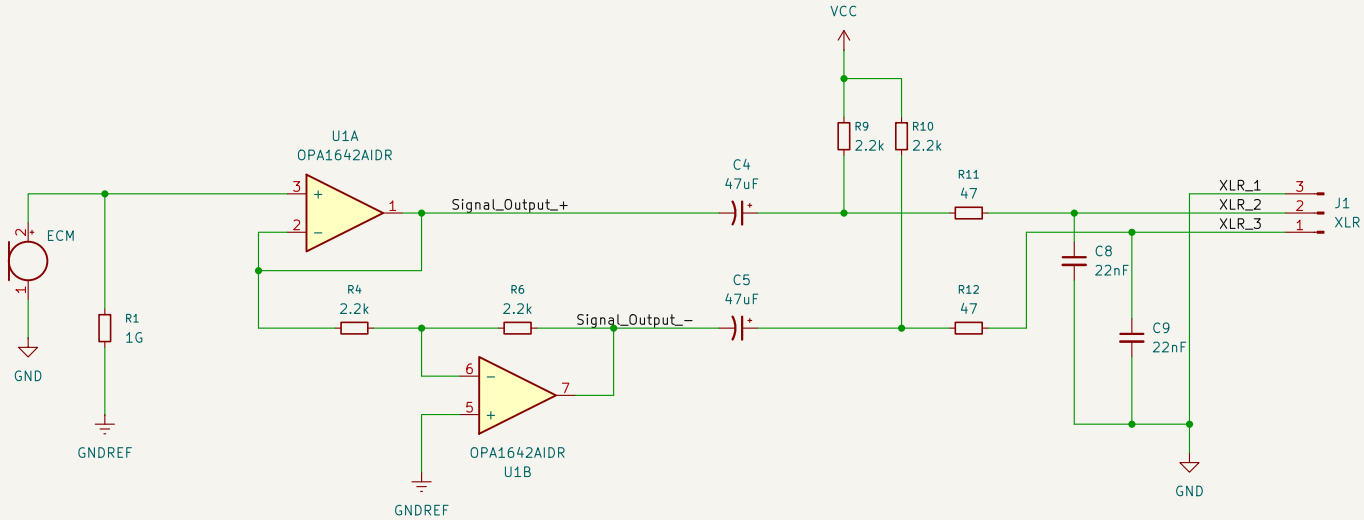

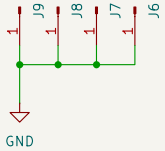

AXin实验室

Sheet: /

File: OPA_Alice_ECM_Microphone.kicad_sch

Title: OPA_Alice_ECM_Microphone

Size: A4	Date: 2025-09-05	Rev: V1.0
KiCad E.D.A. 9.0.4		Id: 1/1