Organization:


## Smithsonian Astrophysical Observatory

60 Garden St.
Cambridge MA, 02310


Program/Project:

## Chandra

## High Resolution Camera

Title:

# Scanned Document

## GKA's Big Book of HRC Notes

| | | | |
|---|---|---|---|
| **Project** | HRC | **Start Date:Time:** | |
| **Document Type** | Scanned Document | **End Date:Time:** | |
| **File** | hrc.poc.proc.ops.tex | **Test Conductor:** | |
| **Revision** | *Rev* | | |
| **Prepared By** | | | |
| **Make Date** | January 17, 2013 | | |

Document Configuration Management Information:

Organization:


**Smithsonian Astrophysical Observatory**

60 Garden St.
Cambridge MA, 02310


Program/Project:

**Chandra**

**High Resolution Camera**

Title:

# CHAPTER

# HRC Commands

| | | | |
|---|---|---|---|
| **Project** | HRC | **Start Date:Time:** | |
| **Document Type** | Scanned Document | **End Date:Time:** | |
| **File** | hrc.poc.proc.ops.tex | **Test Conductor:** | |
| **Revision** | *Rev* | | |
| **Prepared By** | | | |
| **Make Date** | January 17, 2013 | | |

Document Configuration Management Information:

**RELEASED**
**Under HEAD CM Control**
**Date:** 29 MAY 98, [illegible]

# The HRC Command List

| Rev | DCO No. | CM | ENGR | PM | DATE |
|---|---|---|---|---|---|
| A | Initial Release | KD | GKA | JS | 4-23-98 |
| B | 85 | KD | GKA | JS | 5-15-98 |
| C | 186 | KD | GKA | JS | 5-26-98 |
| D | 187 | [illegible] | [illegible] | GKA for JS | 28-MY-98 |
| | | | | | |

CONTENTS

1.0 DISCRETE COMMANDS

2.0 SERIAL DIGITAL COMMANDS

2.1 1st Decoder (Spect & Shield A HVPS)
2.2 2nd Decoder (Imaging and Shield B HVPS)
2.3 3rd Decoder (Low Voltage Power Supply Control)
2.4 4th Decoder (Motor Controller and Observing Mode CMDS)
2.5 5th Decoder (CEA CMDS)
2.6 6th Decoder (Discriminator Thresholds)
2.7 7th Decoder (Unassigned)
2.8 8th Decoder (Unassigned)
2.9 Block 0 (CEA Features)
2.10 Block 1 (Motion Control Commands)
2.11 Block 2 (Limit Switch Enable Commands)
2.12 Block 3 (Unused)
2.13 Block 4 (Unused)
2.14 Block 5 (Motor Mode Commands)
2.15 Block 6 (Motor Select Commands)
2.16 Block 7 Available (78XX thru 7FXX)

## 1.0 DISCRETE COMMANDS

| MNEMONIC | | DESCRIPTION | DISCRETE TLM VERIFIER |
|---|---|---|---|
| 32H | 2C1BASL | BUS A SELECT, CEA A LVPS | 2C1LVBS |
| 33H | 2C1BBSL | BUS B SELECT, CEA A LVPS | 2C1LVBS |
| 74H | 2C2BASL | BUS A SELECT, CEA B LVPS | 2C2LVBS |
| 75H | 2C2BBSL | BUS B SELECT, CEA B LVPS | 2C2LVBS |
| 34H | 2IMBASL | BUS A SELECT, IMAGING HVPS | 2IMHVBS |
| 36H | 2IMBBSL | BUS B SELECT, IMAGING HVPS | 2IMHVBS |
| 76H | 2SPBASL | BUS A SELECT, SPECTROSCOPY HVPS | 2SPHVBS |
| 77H | 2SPBBSL | BUS B SELECT, SPECTROSCOPY HVPS | 2SPHVBS |
| 37H | 2S1BASL | BUS A SELECT, SHIELD A HVPS | 2S1HVBS |
| 38H | 2S1BBSL | BUS B SELECT, SHIELD A HVPS | 2S1HVBS |
| 78H | 2S2BASL | BUS A SELECT, SHIELD B HVPS | 2S2HVBS |
| 79H | 2S2BBSL | BUS B SELECT, SHIELD B HVPS | 2S2HVBS |
| 39H | 2PRASSL | SPECTR DETECTOR SELECT, PREAMP A | 2PREADS |
| 3AH | 2PRAISL | IMAGING DETECTOR SELECT, PREAMP A | 2PREADS |
| 3BH | 2PRA1SL | SHIELD PMT 1 SELECT, PREAMP A | 2ELEASS |
| 3DH | 2PRA2SL | SHIELD PMT 2 SELECT, PREAMP A | 2ELEASS |
| 7AH | 2PRBSSL | SPECTR DETECTOR SELECT, PREAMP B | 2PREBDS |
| 7BH | 2PRBISL | IMAGING DETECTOR SELECT, PREAMP B | 2PREBDS |
| 7CH | 2PRB1SL | SHIELD PMT 1 SELECT, PREAMP B | 2ELEBSS |
| 7DH | 2PRB2SL | SHIELD PMT 2 SELECT, PREAMP B | 2ELEBSS |
| 3EH | 205VAON | +5V LV POWER SUPPLY A ON | 2PS5AON |
| 3FH | 205VAOF | +5V LV POWER SUPPLY A OFF | 2PS5AON |
| 7EH | 205VBON | +5V LV POWER SUPPLY B ON | 2PS5BON |
| 7FH | 205VBOF | +5V LV POWER SUPPLY B OFF | 2PS5BON |
| 22H C | 2FSMREN | FAILSAFE MASTER RELAY ENABLE | 2FSMRST |
| 24H | 2FSMRDI | FAILSAFE MASTER RELAY DISABLE | 2FSMRST |
| 25H C | 2FSCSEN | FAILSAFE CALSRC RELAY ENABLE | 2FSCAST |

| | | | | |
|---|---|---|---|---|
| 28H | | 2FSCSDI | FAILSAFE CALSRC RELAY DISABLE | 2FSCAST |
| 65H | C | 2FSPYEN | FAILSAFE +Y SHUTTER ENABLE | 2FSPYST |
| 66H | | 2FSPYDI | FAILSAFE +Y SHUTTER DISABLE | 2FSPYST |
| 69H | C | 2FSNYEN | FAILSAFE -Y SHUTTER ENABLE | 2FSNYST |
| 6AH | | 2FSNYDI | FAILSAFE -Y SHUTTER DISABLE | 2FSNYST |

## 2.0 SERIAL DIGITAL COMMANDS

TLM VERIFIERS ARE READ IN SCIENCE HEADER TLM FRAMES

### 2.1 1st Decoder (Spect & Shield A HVPS)

| DEC | | HEX | MNEMONIC | DESCRIPTION | TLM MNEMONIC | VERIFIER BYTE-BIT |
|---|---|---|---|---|---|---|
| 00 | | 00XX | CODE NOT USED | | | |
| 01 | | 0100 | 2SPHVOF | SPECT DET HV OFF | 2SPONST | 88/7 |
| | C | 0101 | 2SPHVON | SPECT DET HV ON | 2SPONST | 88/7 |
| 02 | C | 02YY | 2SPTTHV | SPECT TOP PLATE HV | 2SPTPAST | 62/0-6 |
| 03 | C | 03YY | 2SPTBHV | SPECT BOT PLATE HV | 2SPBPAST | 63/0-6 |
| 04 | | 0400 | 2SPCLDS | SPECT ILIM DISABLE | 2SPCLST | 88/6 |
| | | 0401 | 2SPCLEN | SPECT ILIM ENABLE | 2SPCLST | 88/6 |
| 05 | | 0500 | 2S1HVOF | SHIELD A HV OFF | 2S1ONST | 88/5 |
| | C | 0501 | 2S1HVON | SHIELD A HV ON | 2S1ONST | 88/5 |
| 06 | C | 06XY | 2S1STHV | SHIELD A HV STEP | 2S1HVST | 89 |
| 07 | | 07XX | | | | |

### 2.2 2nd Decoder (Imaging and Shield B HVPS)

| DEC | | HEX | MNEMONIC | DESCRIPTION | | |
|---|---|---|---|---|---|---|
| 08 | | 0800 | | | | |
| 09 | | 0900 | 2IMHVOF | IMAGING DET HV OFF | 2IMONST | 88/4 |
| | C | 0901 | 2IMHVON | IMAGING DET HV ON | 2IMONST | 88/4 |
| 10 | C | 0AYY | 2IMTTHV | IMAGING TOP PLATE HV | 2IMTPAST | 64/0-6 |
| 11 | C | 0BYY | 2IMTBHV | IMAGING BOT PLATE HV | 2IMBPAST | 65/0-6 |
| 12 | | 0C00 | 2IMCLDS | IMAGING ILIM DISABLE | 2IMCLST | 88/3 |
| | | 0C01 | 2IMCLEN | IMAGING ILIM ENABLE | 2IMCLST | 88/3 |
| 13 | | OD00 | 2S2HVOF | SHIELD B HV OFF | 2S2ONST | 88/2 |
| | C | OD01 | 2S2HVON | SHIELD B HV ON | 2S2ONST | 88/2 |
| 14 | C | 0EXY | 2S2STHV | SHIELD B HV STEP | 2S2HVST | 90 |
| 15 | | 0FXX | | | | |

### 2.3 3rd Decoder (Low Voltage Power Supply Control)

| DEC | HEX | MNEMONIC | DESCRIPTION | | |
|---|---|---|---|---|---|
| 16 | 1000 | 215PCAOF | +15V LV POWER SUPPLY OFF | 215PCAST | 63/7 |
| | 1001 | 215PCAON | +15V LV POWER SUPPLY ON | 215PCAST | 63/7 |
| 17 | 1100 | 215NCAOF | -15V LV POWER SUPPLY OFF | 215NCAST | 64/7 |
| | 1101 | 215NCAON | -15V LV POWER SUPPLY ON | 215NCAST | 64/7 |
| 18 | 1200 | 224PCAOF | +24V LV POWER SUPPLY OFF | 224PCAST | 62/7 |
| | 1201 | 224PCAON | +24V LV POWER SUPPLY ON | 224PCAST | 62/7 |
| 19 | 13XX | | | | |
| 20 | 14XX | | | | |
| 21 | 15XX | | | | |
| 22 | 16XX | | | | |
| 23 | 17XX | | | | |

## 2.4 4th Decoder (Motor Controller and Observing Mode CMDS)

| DEC | HEX | MNEMONIC | DESCRIPTION | | |
|---|---|---|---|---|---|
| 24 | 18YY | 2PSHBALD | MOT CTRL POS WORD HI BYTE LOAD | 2SCTHAST | 69 |
| 25 | 19YY | 2PSLBALD | MOT CTRL POS WORD LO BYTE LOAD | 2SCTHAST | 70 |
| 26 | 1A00 | 2OBSVASL | OBSERVING MODE SELECT | 2OBNLASL | 86/1 |
| | 1A01 | 2NXILASL | NEXT IN LINE MODE SELECT | 2OBNLASL | 86/1 |
| 27 | 1B00 | 2SPIMASL | SPECT DET IN IMAGING MODE | 2SPMDASL | 86/0 |
| | 1B01 | 2SPNLASL | SPECT DET IN NORMAL MODE | 2SPMDASL | 86/0 |
| 28 | 1CXX | | | | |
| 29 | 1DXX | | | | |
| 30 | 1EXX | | | | |
| 31 | 1FXX | | | | |

## 2.5 5th Decoder (CEA CMDS)

| DEC | HEX | MNEMONIC | DESCRIPTION | | |
|---|---|---|---|---|---|
| 32 | 20YY | 2CALBAAM | CAL PULSE AMPLITUDE | 2CALPALV | 107 |
| 33 | 2100 | 2CLMDAOF | CAL MODE OFF | 2CLMDAST | 86/3 |
| | 2101 | 2CLMDAON | CAL MODE ON | 2CLMDAST | 86/3 |
| 34 | 22YY | 2FCPUALV | FORCED COARSE POS "U" | 2FCPUAST | 79 |
| 35 | 23YY | 2FCPVALV | FORCED COARSE POS "V" | 2FCPVAST | 80 |
| 36 | 24YY | 2CBHUALV | CB HI CHANNEL, "U" AXIS | 2CBHUAST | 81 |
| 37 | 25YY | 2CBLUALV | CB LO CHANNEL, "U" AXIS | 2CBLUAST | 82 |
| 38 | 26YY | 2CBHVALV | CB HI CHANNEL, "V" AXIS | 2CBHVAST | 83 |
| 39 | 27YY | 2CBLVALV | CB LO CHANNEL, "V" AXIS | 2CBLVAST | 84 |

## 2.6 6th Decoder (Discriminator Thresholds)

| DEC | HEX | MNEMONIC | DESCRIPTION | | |
|---|---|---|---|---|---|
| 40 | 28YY | 2ULDIATH | UPPER LVL THRESHOLD | 2ULDIALV | 104 |
| 41 | 29YY | 2LLDIATH | TRIGGER LVL THRESHOLD | 2LLDIALV | 105 |
| 42 | 2AYY | | | | |
| 43 | 2BYY | 2GRDVAAM | GRID BIAS VOLTAGE | 2GRDVALV | 108 |
| 44 | 2CYY | 2WDTHATH | COARSE WIDTH THRESHOLD | 2WDTHAST | 85 |
| 45 | 2DYY | 2RSRFAAM | RANGE SWITCH SETTING | 2RSRFALV | 109 |
| 46 | 2EXX | | | | |
| 47 | 2FXX | | | | |

## 2.7 7th Decoder (Unassigned)

| DEC | HEX | MNEMONIC | DESCRIPTION |
|---|---|---|---|
| 48 | 30XX | | |
| 49 | 31XX | | |
| 50 | 32XX | | |
| 51 | 33XX | | |
| 52 | 34XX | | |
| 53 | 35XX | | |
| 54 | 36XX | | |
| 55 | 37XX | | |

## 2.8 8th Decoder (Unassigned)

| DEC | HEX | MNEMONIC | DESCRIPTION |
|---|---|---|---|
| 56 | 38XX | | |

| | |
|---|---|
| 57 | 39XX |
| 58 | 3AXX |
| 59 | 3BXX |
| 60 | 3CXX |
| 61 | 3DXX |
| 62 | 3EXX |
| 63 | 3FXX |

2.9 Block 0 (CEA Features)

| DEC | HEX | MNEMONIC | DESCRIPTION | | |
|---|---|---|---|---|---|
| 64 | 4000 | 2SHL1ADI | SHIELD ANTICO DISABLE | 2SHLDAVR | 87/0 |
| | 4001 | 2SHL1AEN | SHIELD ANTICO ENABLE | 2SHLDAVR | 87/0 |
| 65 | 4100 | 2WDTHADI | WIDTH DISABLE | 2WDTHAVR | 87/1 |
| | 4101 | 2WDTHAEN | WIDTH ENABLE | 2WDTHAVR | 87/1 |
| 66 | 4200 | 2ULDIADI | UPPER LVL DISABLE | 2ULDIAVR | 87/2 |
| | 4201 | 2ULDIAEN | UPPER LVL ENABLE | 2ULDIAVR | 87/2 |
| 67 | 4300 | 2CBLKADI | CENTER BLANK DISABLE | 2CBLKAVR | 87/3 |
| | 4301 | 2CBLKAEN | CENTER BLANK ENABLE | 2CBLKAVR | 87/3 |
| 68 | 4400 | 2EBLKADI | EDGE BLANK DISABLE | 2EBLKAVR | 87/4 |
| | 4401 | 2EBLKAEN | EDGE BLANK ENABLE | 2EBLKAVR | 87/4 |
| 69 | 4500 | 2FIFOAOF | DATA FIFO RESET | 2FIFOAVR | 86/2 |
| | 4501 | 2FIFOAON | DATA FIFO ENABLE | 2FIFOAVR | 86/2 |
| 70 | 4600 | | | | |
| | 4601 | | | | |
| 71 | 4700 | | | | |
| | 4701 | | | | |

2.10 Block 1 (Motion Control Commands)

| DEC | HEX | MNEMONIC | DESCRIPTION | | |
|---|---|---|---|---|---|
| 72 | 4800 | | | | |
| | 4801 | | | | |
| 73 | 4900 | 2SMOIADI | SELECTED MTR OVERCUR PROT DISA | 2DROIAST | 71/1 |
| | 4901 | 2SMOIAEN | SELECTED MTR OVERCUR PROT ENAB | 2DROIAST | 71/1 |
| 74 | 4A00 | 2SMOTADI | SELECTED MTR OVERTEM PROT DISA | 2DROTAST | 71/2 |
| | 4A01 | 2SMOTAEN | SELECTED MTR OVERTEM PROT ENAB | 2DROTAST | 71/2 |
| 75 | 4B00 | | | | |
| | 4B01 | | | | |
| 76 | 4C00 | | | | |
| | 4C01 | | | | |
| 77 | 4D00 | | | | |
| | 4D01 | | | | |
| 78 | 4E00 | | | | |
| | 4E01 | | | | |
| 79 | 4F00 | | | | |
| | 4F01 | | | | |

2.11 Block 2 (Limit Switch Enable Commands)

| DEC | HEX | MNEMONIC | DESCRIPTION | | |
|---|---|---|---|---|---|
| 80 | 5000 | 2CHPLADI | CLOS/HOME PRIMARY LIM SW DISA | 2CPLSAST | 72/0 |
| | 5001 | 2CHPLAEN | CLOS/HOME PRIMARY LIM SW ENAB | 2CPLSAST | 72/0 |
| 81 | 5100 | 2CHSLADI | CLOS/HOME SECON LIM SW DISA | 2CSLSAST | 72/1 |
| | 5101 | 2CHSLAEN | CLOS/HOME SECON LIM SW ENAB | 2CSLSAST | 72/1 |
| 82 | 5200 | 2OMPLADI | OPEN/MAX PRIMARY LIM SW DISA | 2OPLSAST | 72/2 |

| | | | | | |
|---|---|---|---|---|---|
| | 5201 | 2OMPLAEN | OPEN/MAX PRIMARY LIM SW ENAB | 2OPLSAST | 72/2 |
| 83 | 5300 | 2OMSLADI | OPEN/MAX SECON LIM SW DISA | 2OSLSAST | 72/3 |
| | 5301 | 2OMSLAEN | OPEN/MAX SECON LIM SW ENAB | 2OSLSAST | 72/3 |
| 84 | 5400 | 2STFLADI | CLEAR STOP FLAGS | 2SFLGAST | 72/4 |
| | 5401 | 2STFLAEN | ENABLE STOP FLAGS | 2SFLGAST | 72/4 |
| 85 | 5500 | | | | 73/5 |
| | 5501 | | | | 73/5 |
| 86 | 5600 | | | | 73/6 |
| | 5601 | | | | 73/6 |
| 87 | 5700 | | | | |
| | 5701 | | | | |

2.12 Block 3 (Unused)

| DEC | HEX | MNEMONIC | DESCRIPTION |
|---|---|---|---|
| 88 | 5800 | | |
| | 5801 | | |
| 89 | 5900 | | |
| | 5901 | | |
| 90 | 5A00 | | |
| | 5A01 | | |
| 91 | 5B00 | | |
| | 5B01 | | |
| 92 | 5C00 | | |
| | 5C01 | | |
| 93 | 5D00 | | |
| | 5D01 | | |
| 94 | 5E00 | | |
| | 5E01 | | |
| 95 | 5F00 | | |
| | 5F01 | | |

2.13 Block 4 (Unused)

| DEC | HEX | MNEMONIC | DESCRIPTION |
|---|---|---|---|
| 96 | 6000 | | |
| | 6001 | | |
| 97 | 6100 | | |
| | 6101 | | |
| 98 | 6200 | | |
| | 6201 | | |
| 99 | 6300 | | |
| | 6301 | | |
| 100 | 6400 | | |
| | 6401 | | |
| 101 | 6500 | | |
| | 6501 | | |
| 102 | 6600 | | |
| | 6601 | | |
| 103 | 6700 | | |
| | 6701 | | |

2.14 Block 5 (Motor Mode Commands)

| | | | | | |
|---|---|---|---|---|---|
| 104 | 6800 | 2MDRVADI | MOTOR DRIVE DISABLE | 2MDRVAST | 68/0 |
| 104 C | 6801 | 2MDRVAEN | MOTOR DRIVE ENABLE | 2MDRVAST | 68/0 |
| 105 | 6901 | 2MVPSAEX | STEP FM HOME TO POS CTR VALUE | 2MCPRAMD | 68/1 |
| 106 | 6A01 | 2MVLAAEX | MOVE TO CLOS/HOME LIM SWITCH | 2MCLAAMD | 68/2 |

| | | | | | |
|---|---|---|---|---|---|
| 107 | | 6B01 | 2MVLBAEX | MOVE TO OPEN/MAX LIMIT SWITCH | 2MCLBAMD | 68/3 |
| 108 | | 6C01 | 2NSTAAEX | MOVE N STEPS TWRD CLOS/HOM LS | 2MCNAAMD | 68/4 |
| 109 | | 6D01 | 2NSTBAEX | MOVE N STEPS TWRD OPEN/MAX LS | 2MCNBAMD | 68/5 |
| 110 | | 6E00 | | SPARE | | 68/6 |
| 111 | | 6FXX | 2MCMRASL | MOTION CONTROL MODE RESET | 2MCMDARS | 68/7 |

2.15 Block 6 (Motor Select Commands)

| | | | | | | |
|---|---|---|---|---|---|---|
| 112 | | 70XX | 2ALMTADS | ALL MOTORS DESELECT | 2ALMTAST | 66/0 |
| 113 | C | 71XX | 2DRMTASL | DOOR MOTOR SELECT | 2DRMTAST | 66/1 |
| 114 | | 72XX | 2CLMTASL | CALSRC MOTOR SELECT | 2CLMTAST | 66/2 |
| 115 | | 73XX | 2PYMTASL | +Y SHUTTER MOTOR SELECT | 2PYMTAST | 66/3 |
| 116 | | 74XX | 2NYMTASL | -Y SHUTTER MOTOR SELECT | 2NYMTAST | 66/4 |

2.16 Block 7 Available (78XX THRU 7FXX)

CODES 8000 THRU FFFF RESERVED FOR FUTURE GROWTH (IF REQUIRED)

UNLESS OTHERWISE SPECIFIED,
CODES XXX1 = ON OR ENABLED
CODES XXX0 = OFF OR DISABLED
X,XX,XXX = DON'T CARE
Y,YY = DATA VALUE
C = CRITICAL COMMAND

Revision History:

Rev "D" has the following change:

In Section 2.10, Change

| | | |
|---|---|---|
| FROM: | 4A00..... | 2SMOTAEN |
| TO: | 4A00..... | 2SMOTADI |
| FROM: | 4A01..... | 2SMOTADI |
| TO: | 4A01..... | 2SMOTAEN |

From jgomes@cfa.harvard.edu Thu Dec 19 16:26:04 1996
Return-Path: <jgomes@cfa.harvard.edu>
Received: from head-cfa (head-cfa.harvard.edu) by cfa218.harvard.edu (4.1/SMI-4.1)
id AA02070; Thu, 19 Dec 96 16:26:02 EST
Received: from cfa.harvard.edu by head-cfa (SMI-8.6/SMI-SVR4)
id QAA26144; Thu, 19 Dec 1996 16:25:57 -0500
Received: from cfapc3 (cfapc3.harvard.edu [131.142.20.149]) by cfa.harvard.edu (8.7.5/8.7.3)
From: "Jack Gomes" <jgomes@cfa.harvard.edu>
Message-Id: <961219162605.ZM8063@cfapc3>
Date: Thu, 19 Dec 1996 16:25:58 -0500
X-Mailer: Z-Mail 4.0 (4.0.0 Aug 21 1995)
To: akenter@cfa.harvard.edu, arochussen@cfa.harvard.edu, aroy@cfa.harvard.edu,
dweaver@cfa.harvard.edu, ejohnston@cfa.harvard.edu,
gaustin@cfa.harvard.edu, ggermain@cfa.harvard.edu,
jchappell@cfa.harvard.edu, jswider@cfa.harvard.edu,
mjuda@cfa.harvard.edu, mzombeck@cfa.harvard.edu,
rkraft@cfa.harvard.edu, rmoore@cfa.harvard.edu,
smurray@cfa.harvard.edu, jpolizotti@cfa.harvard.edu
Subject: HRC Critical Command List
Mime-Version: 1.0
Content-Type: multipart/mixed;
boundary="PART-BOUNDARY=.1961219162602.ZM8063.cfapc3"
Status: R

--PART-BOUNDARY=.1961219162602.ZM8063.cfapc3
X-Zm-Content-Name: ccmd.lis
Content-Description: Data
Content-Type: text/plain ; name="ccmd.lis"; charset=iso-8859-1
X-Zm-Decoding-Hint: mimencode -b -u

HRC Critical Command List 12/19/96 ****PRELIMINARY**** CCMD.LIS

!!!!!! SUBJECT TO CHANGE WITHOUT NOTICE !!!!!!
**********
Here are my suggestions for HRC critical commands. All comments are welcome.
I would like to review and incorporate all agreed upon changes at the 12/26/96
science meeting.

I have codes in the extreme left hand column with the following meanings:

y# = caution
C# = critical command

y1 Verify that primary HRC power is off before sending these commands (hot switching could degrade the switching relay contacts).

y2 Verify that MCP high voltages are off before changing detectors (even though the preamps are protected against high voltage transients, it is best to not to rely on the protection if you don't have to).

y3 Verify that MCP voltages are zero before actuating.

y4 Verify that PMT voltages are zero before actuating.

y5 Caution - disables limit switches or overcurrent/overtemperature

protection.

c1 Actuate only in the event of mechanism failure. Test conductor concurrence required.

c2 Do not actuate unless proper vacuum conditions exist at detector. Do not operate with arguments (voltage steps) in excess of TBD. Test conductor concurrence required.

c3 Verify that proper environmental conditions exist before opening door. Verify that both shutters are in the "home" position before actuation. Test conductor concurrence required.

**********

Discrete Commands

| MNEMONIC | | DESCRIPTION | DISCRETE TLM VERIFIER |
|---|---|---|---|
| y1 32H | 2C1BASL | BUS A SELECT, CEA A LVPS | 2C1LVBS |
| y1 33H | 2C1BBSL | BUS B SELECT, CEA A LVPS | 2C1LVBS |
| y1 74H | 2C2BASL | BUS A SELECT, CEA B LVPS | 2C2LVBS |
| y1 75H | 2C2BBSL | BUS B SELECT, CEA B LVPS | 2C2LVBS |
| y1 34H | 2IMBASL | BUS A SELECT, IMAGING HVPS | 2IMHVBS |
| y1 36H | 2IMBBSL | BUS B SELECT, IMAGING HVPS | 2IMHVBS |
| y1 76H | 2SPBASL | BUS A SELECT, SPECTROSCOPY HVPS | 2SPHVBS |
| y1 77H | 2SPBBSL | BUS B SELECT, SPECTROSCOPY HVPS | 2SPHVBS |
| y1 37H | 2S1BASL | BUS A SELECT, SHIELD A HVPS | 2S1HVBS |
| y1 38H | 2S1BBSL | BUS B SELECT, SHIELD A HVPS | 2S1HVBS |
| y1 78H | 2S2BASL | BUS A SELECT, SHIELD B HVPS | 2S2HVBS |
| y1 79H | 2S2BBSL | BUS B SELECT, SHIELD B HVPS | 2S2HVBS |
| y2 39H | 2PRASSL | SPECTR DETECTOR SELECT, PREAMP A | 2PREADS |
| y2 3AH | 2PRAISL | IMAGING DETECTOR SELECT, PREAMP A | 2PREADS |
| 3BH | 2PRA1SL | SHIELD PMT 1 SELECT, PREAMP A | 2ELEASS |
| 3DH | 2PRA2SL | SHIELD PMT 2 SELECT, PREAMP A | 2ELEASS |
| y2 7AH | 2PRBSSL | SPECTR DETECTOR SELECT, PREAMP B | 2PREBDS |
| y2 7BH | 2PRBISL | IMAGING DETECTOR SELECT, PREAMP B | 2PREBDS |
| 7CH | 2PRB1SL | SHIELD PMT 1 SELECT, PREAMP B | 2ELEBSS |
| 7DH | 2PRB2SL | SHIELD PMT 2 SELECT, PREAMP B | 2ELEBSS |
| 3EH | 205VAON | +5V LV POWER SUPPLY A ON | 2PS5AON |
| 3FH | 205VAOF | +5V LV POWER SUPPLY A OFF | 2PS5AON |
| 7EH | 205VBON | +5V LV POWER SUPPLY B ON | 2PS5BON |
| 7FH | 205VBOF | +5V LV POWER SUPPLY B OFF | 2PS5BON |
| c1 22H | 2FSMREN | FAILSAFE MASTER RELAY ENABLE | TBD |
| 24H | 2FSMRDI | FAILSAFE MASTER RELAY DISABLE | TBD |
| c1 25H | 2FSCSEN | FAILSAFE CALSRC RELAY ENABLE | TBD |
| 28H | 2FSCSDI | FAILSAFE CALSRC RELAY DISABLE | TBD |
| c1 65H | 2FSPYEN | FAILSAFE +Y SHUTTER ENABLE | TBD |
| 66H | 2FSPYDI | FAILSAFE +Y SHUTTER DISABLE | TBD |
| c1 69H | 2FSNYEN | FAILSAFE -Y SHUTTER ENABLE | TBD |
| 6AH | 2FSNYDI | FAILSAFE -Y SHUTTER DISABLE | TBD |

Serial Digital Commands

| HEX | MNEMONIC | DESCRIPTION | TLM VERIFIER |
|---|---|---|---|

| | | | | | |
|---|---|---|---|---|---|
| | 0100 | 2SPHVOF | SPECT DET HV OFF | 2SPONST | 88/7 |
| y3 | 0101 | 2SPHVON | SPECT DET HV ON | 2SPONST | 88/7 |
| c2 | 020Y | 2SPTTHV | SPECT TOP PLATE HV | 2SPTPST | 62/0-6 |
| c2 | 030Y | 2SPTBHV | SPECT BOT PLATE HV | 2SPBPST | 63/0-6 |
| | 0400 | 2SPCLDS | SPECT ILIM DISABLE | 2SPCLST | 88/6 |
| | 0401 | 2SPCLEN | SPECT ILIM ENABLE | 2SPCLST | 88/6 |
| | 0500 | 2S1HVOF | SHIELD A HV OFF | 2S1ONST | 88/5 |
| y4 | 0501 | 2S1HVON | SHIELD A HV ON | 2S1ONST | 88/5 |
| c2 | 060Y | 2S1STHV | SHIELD A HV STEP | 2S1HVST | 89 |
| | 0900 | 2IMHVOF | IMAGING DET HV OFF | 2IMONST | 88/4 |
| y3 | 0901 | 2IMHVON | IMAGING DET HV ON | 2IMONST | 88/4 |
| c2 | 0A0Y | 2IMTTHV | IMAGING TOP PLATE HV | 2IMTPST | 64/0-6 |
| c2 | 0B0Y | 2IMTBHV | IMAGING BOT PLATE HV | 2IMBPST | 65/0-6 |
| | 0C00 | 2IMCLDS | IMAGING ILIM DISABLE | 2IMCLST | 88/3 |
| | 0C01 | 2IMCLEN | IMAGING ILIM ENABLE | 2IMCLST | 88/3 |
| | 0D00 | 2S2HVOF | SHIELD B HV OFF | 2S2ONST | 88/2 |
| y4 | 0D01 | 2S2HVON | SHIELD B HV ON | 2S2ONST | 88/2 |
| c2 | 0E0Y | 2S2STHV | SHIELD B HV STEP | 2S2HVST | 90 |
| | 1000 | 215PCAOF | +15V LV POWER SUPPLY OFF | 215PCAST | 63/7 |
| | 1001 | 215PCAON | +15V LV POWER SUPPLY ON | 215PCAST | 63/7 |
| | 1100 | 215NCAOF | -15V LV POWER SUPPLY OFF | 215NCAST | 64/7 |
| | 1101 | 215NCAON | -15V LV POWER SUPPLY ON | 215NCAST | 64/7 |
| | 1200 | 224PCAOF | +24V LV POWER SUPPLY OFF | 224PCAST | 62/7 |
| | 1201 | 224PCAON | +24V LV POWER SUPPLY ON | 224PCAST | 62/7 |
| | 18YY | 2PSHBALD | MOT CTRL POS WORD HI BYTE LOAD | 2SCTHAST | 69 |
| | 19YY | 2PSLBALD | MOT CTRL POS WORD LO BYTE LOAD | 2SCTLAST | 70 |
| | 1A00 | 2OBSVASL | OBSERVING MODE SELECT | 2OBNLASL | 86/1 |
| | 1A01 | 2NXILASL | NEXT IN LINE MODE SELECT | 2OBNLASL | 86/1 |
| | 1B00 | 2SPNLASL | SPECT DET IN IMAGING MODE | 2SPMDASL | 86/0 |
| | 1B01 | 2SPMDASL | SPECT DET IN NORMAL MODE | 2SPIMASL | 86/0 |
| | 20YY | 2CALBAAM | CAL PULSE AMPLITUDE | 2CALPALV | 107 |
| | 2100 | 2CLMDAOF | CAL MODE OFF | 2CLMDAST | 86/3 |
| | 2101 | 2CLMDAON | CAL MODE ON | 2CLMDAST | 86/3 |
| | 22YY | 2FCPUALV | FORCED COARSE POS "U" | 2FCPUAST | 79 |
| | 23YY | 2FCPVALV | FORCED COARSE POS "V" | 2FCPVAST | 80 |
| | 24YY | 2CBHUALV | CB HI CHANNEL, "U" AXIS | 2CBHUAST | 81 |
| | 25YY | 2CBLUALV | CB LO CHANNEL, "U" AXIS | 2CBLUAST | 82 |
| | 26YY | 2CBHVALV | CB HI CHANNEL, "V" AXIS | 2CBHVAST | 83 |
| | 27YY | 2CBLVALV | CB LO CHANNEL, "V" AXIS | 2CBLVAST | 84 |
| | 28YY | 2ULDIATH | UPPER LVL THRESHOLD | 2ULDIALV | 104 |
| | 29YY | 2LLDIATH | TRIGGER LVL THRESHOLD | 2LLDIALV | 105 |
| | 2BYY | 2GRDVAAM | GRID BIAS VOLTAGE | 2GRDVALV | 108 |
| | 2CYY | 2WDTHATH | COARSE WIDTH THRESHOLD | 2WDTHAST | 85 |
| | 2DYY | 2RSRFAAM | RANGE SWITCH SETTING | 2RSRFALV | 109 |
| | 4000 | 2SHL1ADI | SHIELD ANTICO DISABLE | 2SHLDAVR | 87/0 |
| | 4001 | 2SHL1ADI | SHIELD ANTICO ENABLE | 2SHLDAVR | 87/0 |
| | 4100 | 2WDTHADI | WIDTH DISABLE | 2WDTHAVR | 87/1 |
| | 4101 | 2WDTHAEN | WIDTH ENABLE | 2WDTHAVR | 87/1 |
| | 4200 | 2ULDIADI | UPPER LVL DISABLE | 2ULDIAVR | 87/2 |
| | 4201 | 2ULDIAEN | UPPER LVL ENABLE | 2ULDIAVR | 87/2 |
| | 4300 | 2CBLKADI | CENTER BLANK DISABLE | 2CBLKAVR | 87/3 |
| | 4301 | 2CBLKAEN | CENTER BLANK ENABLE | 2CBLKAVR | 87/3 |
| | 4400 | 2EBLKADI | EDGE BLANK DISABLE | 2EBLKAVR | 87/4 |
| | 4401 | 2EBLKAEN | EDGE BLANK ENABLE | 2EBLKAVR | 87/4 |
| | 4500 | 2FIFOAOF | DATA FIFO RESET | 2FIFOAVR | 86/2 |
| | 4501 | 2FIFOAON | DATA FIFO ENABLE | 2FIFOAVR | 86/2 |

| | | | | | |
|---|---|---|---|---|---|
| y5 | 4900 | 2SMOIADI | SELECTED MTR OVERCURRENT PROT DISA | 2DROIAST | 71/1 |
| | 4901 | 2SMOIAEN | SELECTED MTR OVERCURRENT PROT ENAB | 2DROIAST | 71/1 |
| | 4A00 | 2SMOTAEN | SELECTED MTR OVERTEMP PROT ENAB | 2DROTAST | 71/2 |
| y5 | 4A01 | 2SMOTADI | SELECTED MTR OVERTEMP PROT DISA | 2DROTAST | 71/2 |
| y5 | 5000 | 2CHPLADI | CLOS/HOME PRIMARY LIMIT SW DISA | 2CPLSAST | 72/0 |
| | 5001 | 2CHPLAEN | CLOS/HOME PRIMARY LIMIT SW ENAB | 2CPLSAST | 72/0 |
| y5 | 5100 | 2CHSLADI | CLOS/HOME SECONDARY LIM SW DISA | 2CSLSAST | 72/1 |
| | 5101 | 2CHSLAEN | CLOS/HOME SECONDARY LIM SW ENAB | 2CSLSAST | 72/1 |
| y5 | 5200 | 2OMPLADI | OPEN/MAX PRIMARY LIMIT SW DISA | 2OPLSAST | 72/2 |
| | 5201 | 2OMPLAEN | OPEN/MAX PRIMARY LIMIT SW ENAB | 2OPLSAST | 72/2 |
| y5 | 5300 | 2OMSLADI | OPEN/MAX SECONDARY LIM SW DISA | 2OSLSAST | 72/3 |
| | 5301 | 2OMSLAEN | OPEN/MAX SECONDARY LIM SW ENAB | 2OSLSAST | 72/3 |
| | 5400 | 2STFLADI | CLEAR STOP FLAGS | 2SFLGAST | 72/4 |
| | 5401 | 2STFLAEN | ENABLE STOP FLAGS | 2SFLGAST | 72/4 |
| | 6800 | 2MDRVAEN | MOTOR DRIVE DISABLE | 2MDRVAST | 68/0 |
| | 6801 | 2MDRVAEN | MOTOR DRIVE ENABLE | 2MDRVAST | 68/0 |
| | 6901 | 2MVPSAEX | STEP FM HOME TO POS CTR VALUE | 2MCPRAMD | 68/1 |
| | 6A01 | 2MVLAAEX | MOVE TO CLOS/HOME LIMIT SWITCH | 2MCLAAMD | 68/2 |
| | 6B01 | 2MVLBAEX | MOVE TO OPEN/MAX LIMIT SWITCH | 2MCLBAMD | 68/3 |
| | 6C01 | 2NSTAAEX | MOVE N STEPS TOWARD CLOS/HOME LS | 2MCNAAMD | 68/4 |
| | 6D01 | 2NSTBAEX | MOVE N STEPS TOWARD OPEN/MAX LS | 2MCNBAMD | 68/5 |
| | 6FXX | 2MCMRASL | MOTION CONTROL MODE RESET | 2MCMDARS | 68/7 |
| | 70XX | 2ALMTADS | ALL MOTORS DESELECT | 2ALMTAST | 66/0 |
| c3 | 71XX | 2DRMTASL | DOOR MOTOR SELECT | 2DRMTAST | 66/1 |
| | 72XX | 2CLMTASL | CALSRC MOTOR SELECT | 2CLMTAST | 66/2 |
| | 73XX | 2PYMTASL | +Y SHUTTER MOTOR SELECT | 2PYMTAST | 66/3 |
| | 74XX | 2NYMTASL | -Y SHUTTER MOTOR SELECT | 2NYMTAST | 66/4 |

--PART-BOUNDARY=.1961219162602.ZM8063.cfapc3--

Organization:


**Smithsonian Astrophysical Observatory**

60 Garden St.
Cambridge MA, 02310


Program/Project:

**Chandra**

**High Resolution Camera**

Title:

# CHAPTER

# HRC Telemetry

| | | | |
|---|---|---|---|
| **Project** | HRC | **Start Date:Time:** | |
| **Document Type** | Scanned Document | **End Date:Time:** | |
| **File** | hrc.poc.proc.ops.tex | **Test Conductor:** | |
| **Revision** | *Rev* | | |
| **Prepared By** | | | |
| **Make Date** | January 17, 2013 | | |

Document Configuration Management Information:

CONTENTS

1.0 HRC DATA IN ENGINEERING TELEMETRY

1.1 Bilevel Telemetry (24)
1.2 Active Analog Telemetry (12)
1.3 Passive Analog Telemetry (10)

2.0 HRC DATA IN SCIENCE TELEMETRY

2.1 Secondary Science and Housekeeping
2.2 Primary Science Event Word

3.0 SCALE FACTORS FOR HRC TELEMETRY

3.1 Scale Factors for Voltages and Currents
3.2 Scale Factors for Temperatures

4.0 HRC TELEMETRY CAUTION & WARNING LIST

4.1 HRC Data in Engineering Telemetry
4.2 HRC Data in Science Telemetry

# 1.0 HRC DATA IN ENGINEERING TELEMETRY

## 1.1 Bilevel Telemetry (24)

| Mnem | mf | by | bi | DESCRIPTION | |
|---|---|---|---|---|---|
| 2C1LVBS | 52 | 271 | 3 | BUS SELECT, CEA A LVPS | (0=A) |
| 2IMHVBS | 52 | 271 | 2 | BUS SELECT, IMAGING HVPS | (0=A) |
| 2S1HVBS | 52 | 271 | 1 | BUS SELECT, SHIELD A HVPS | (0=A) |
| 2PREADS | 52 | 271 | 0 | DETECTOR SELECT, PREAMP A | (0=I) |
| 2ELEASS | 52 | 271 | 4 | SHIELD PMT SELECT, PREAMP A | (0=2) |
| 2PS5AON | 52 | 271 | 5 | +5V LV POWER SUPPLY A ON/OFF | (0=Off) |
| 2DRLSOP | 52 | 271 | 6 | DOOR PRIMARY LIMIT SWITCH OPEN | (0=not) |
| 2DRLSCL | 52 | 271 | 7 | DOOR PRIMARY LIMIT SWITCH CLOS | (0=not) |
| 2PYLSHM | 51 | 271 | 3 | +Y SHUTTER PRIMARY LIMIT SWITCH HOME | (0=not) |
| 2PYLSMX | 51 | 271 | 2 | +Y SHUTTER PRIMARY LIM SWITCH MAX TRAVEL | (0=not) |
| 2FSMRST | 51 | 271 | 4 | FAILSAFE MASTER RELAY ON/OFF | (0=ena) |
| 2FSCAST | 51 | 271 | 5 | FAILSAFE CALSRC RELAY ON/OFF | (0=ena) |
| 2C2LVBS | 54 | 271 | 3 | BUS SELECT, CEA B LVPS | (0=A) |
| 2SPHVBS | 54 | 271 | 2 | BUS SELECT, SPECTROSCOPY HVPS | (0=A) |
| 2S2HVBS | 54 | 271 | 1 | BUS SELECT, SHIELD B HVPS | (0=A) |
| 2PREBDS | 54 | 271 | 0 | DETECTOR SELECT, PREAMP B | (0=I) |
| 2ELEBSS | 54 | 271 | 4 | SHIELD PMT SELECT, PREAMP B | (0=2) |
| 2PS5BON | 54 | 271 | 5 | +5V LV POWER SUPPLY B ON/OFF | (0=Off) |
| 2MYLSHM | 54 | 271 | 6 | -Y SHUTTER PRIMARY LIMIT SWITCH HOME | (0=not) |
| 2MYLSMX | 54 | 271 | 7 | -Y SHUTTER PRIMARY LIM SWITCH MAX TRAVEL | (0=not) |
| 2CSLSHM | 53 | 271 | 3 | CAL SOURCE PRIMARY LIMIT SWITCH HOME | (0=not) |
| 2CSLSMX | 53 | 271 | 2 | CAL SOURCE PRIMARY LIM SWITCH MAX TRAVEL | (0=not) |

| | | | | | |
|---|---|---|---|---|---|
| 2FSPYST | 53 | 271 | 4 | FAILSAFE +Y SHUTTER ON/OFF | (0=ena) |
| 2FSNYST | 53 | 271 | 5 | FAILSAFE -Y SHUTTER ON/OFF | (0=ena) |

1.2 Active Analog Telemetry (12)

| Mnem | mf | by | DESCRIPTION |
|---|---|---|---|
| 2P05VAVL | 5 | 270 | SECONDARY +5 BUS VOLTAGE A |
| 2P15VAVL | 7 | 270 | SECONDARY +15 BUS VOLTAGE A |
| 2N15VAVL | 3 | 270 | SECONDARY -15 BUS VOLTAGE A |
| 2P24VAVL | 9 | 270 | SECONDARY +24 BUS VOLTAGE A |
| 2DETART | 1 | 270 | DETECTOR EVENT RATE A |
| 2SHLDART | 11 | 270 | SHIELD EVENT RATE A |
| 2P05VBVL | 6 | 270 | SECONDARY +5 BUS VOLTAGE B |
| 2P15VBVL | 8 | 270 | SECONDARY +15 BUS VOLTAGE B |
| 2N15VBVL | 4 | 270 | SECONDARY -15 BUS VOLTAGE B |
| 2P24VBVL | 10 | 270 | SECONDARY +24 BUS VOLTAGE B |
| 2DETBRT | 2 | 270 | DETECTOR EVENT RATE B |
| 2SHLDBRT | 12 | 270 | SHIELD EVENT RATE B |

1.3 Passive Analog Telemetry (10)

| Mnem | mf | by | DESCRIPTION |
|---|---|---|---|
| 2PMT1T | 19 | 271 | HRC PMT 1 TEMPERATURE |
| 2PMT2T | 20 | 271 | HRC PMT 2 TEMPERATURE |
| 2DTSTATT | 12 | 271 | HRC DETECTOR HOUSING TEMPERATURE #1 (OUTSIDE) T_Outdet1 |
| 2DCENTRT | 11 | 271 | HRC DETECTOR HOUSING TEMPERATURE #2 (OUTSIDE) |
| 2FHTRMZT | 13 | 271 | HRC FRONT END ELECTRONICS BOX TEMPERATURE |
| 2CHTRPZT | 9 | 271 | HRC CENTRAL ELECTRONICS BOX TEMPERATURE |
| 2FRADPYT | 14 | 271 | +Y TEMP |
| 2CEAHVPT | 0 | 270 | -Y TEMP (read in all minor frames) |
| 2CONDMXT | 10 | 271 | CONDUIT TEMP |
| 2UVLSPXT | 13 | 270 | SNOUT TEMP |

2.0 HRC DATA IN SCIENCE TELEMETRY

SERIAL DIGITAL TELEMETRY

| mf | BYTE | BIT | MNEMONIC | DESCRIPTION |
|---|---|---|---|---|

2.1 Secondary Science and Housekeeping

| | | | | |
|---|---|---|---|---|
| 0 | 56 | ALL | 2TLEVART | TOTAL EVENT RATE, HI BYTE |
| 0 | 57 | ALL | | TOTAL EVENT RATE, LO BYTE |
| 0 | 58 | ALL | 2VLEVART | VALID EVENT RATE, HI BYTE |
| 0 | 59 | ALL | | VALID EVENT RATE, LO BYTE |
| 0 | 60 | ALL | 2SHEVART | SHIELD EVENT RATE, HI BYTE |
| 0 | 61 | ALL | | SHIELD EVENT RATE, LO BYTE |
| 0 | 62 | 7 | 224PCAST | +24V LVPS ON/OFF |
| 0 | 62 | 0-6 | 2SPTPAST | SP DET TOP PLATE HV STEP |
| 0 | 63 | 7 | 215PCAST | +15V LVPS ON/OFF |
| 0 | 63 | 0-6 | 2SPBPAST | SP DET BOT PLATE HV STEP |
| 0 | 64 | 7 | 215NCAST | -15V LVPS ON/OFF |
| 0 | 64 | 0-6 | 2IMTPAST | IM DET TOP PLATE HV STEP |
| 0 | 65 | 7 | | SECONDARY (SIGNAL) GROUND |
| 0 | 65 | 0-6 | 2IMBPAST | IM DET BOT PLATE HV STEP |
| 0 | 66 | 5-7 | SPARE | |
| 0 | 66 | 4 | 2NYMTAST | -Y SHUTTER MOTOR SELECTED |
| 0 | 66 | 3 | 2PYMTAST | +Y SHUTTER MOTOR SELECTED |

| | | | | |
|---|---|---|---|---|
| 0 | 66 | 2 | 2CLMTAST | CALSRC MOTOR SELECTED |
| 0 | 66 | 1 | 2DRMTAST | DOOR MOTOR SELECTED |
| 0 | 66 | 0 | 2ALMTAST | ALL MOTORS DESELECTED |
| 0 | 67 | 7 | 2MSMDARS | MOTION CONTROL MODE RESET |
| 0 | 67 | 6 | 2MDIRAST | MOTOR DIRECTION (TRWD A,B) |
| 0 | 67 | 5 | 2MSNBAMD | MTR STAT REG MV NSTEPS TRWD "B" |
| 0 | 67 | 4 | 2MSNAAMD | MTR STAT REG MV NSTEPS TWRD "A" |
| 0 | 67 | 3 | 2MSLBAMD | MTR STAT REG MV TO LS "B" |
| 0 | 67 | 2 | 2MSLAAMD | MTR STAT REG MV TO LS "A" |
| 0 | 67 | 1 | 2MSPRAMD | MTR STAT REG MV TO POS REG |
| 0 | 67 | 0 | 2MSDRAMD | MTR DRIVE ENABLE |
| 0 | 68 | 7 | 2MCMDARS | MOTION CONTROL MODE RESET |
| 0 | 68 | 6 | SPARE | |
| 0 | 68 | 5 | 2MCNBAMD | MTR CMD REG MV NSTEPS TRWD "B" |
| 0 | 68 | 4 | 2MCNAAMD | MTR CMD REG MV NSTEPS TWRD "A" |
| 0 | 68 | 3 | 2MCLBAMD | MTR CMD REG MV TO LS "B" |
| 0 | 68 | 2 | 2MCLAAMD | MTR CMD REG MV TO LS "A" |
| 0 | 68 | 1 | 2MCPRAMD | MTR CMD REG MV TO POS REG |
| 0 | 68 | 0 | 2MDRVAST | MTR DRIVE ENABLE |
| 0 | 69 | ALL | 2SCTHAST | STEP CTR LAST VAL (HI BYTE) |
| 0 | 70 | ALL | 2SCTHAST | STEP CTR LAST VAL (LO BYTE) |
| 0 | 71 | 7 | SPARE | |
| 0 | 71 | 6 | 2SMOIAST | SELECTED MOTOR OVERCURRENT FLAG |
| 0 | 71 | 5 | 2SMOTAST | SELECTED MOTOR OVERTEMP FLAG |
| 0 | 71 | 3-7 | SPARE | |
| 0 | 71 | 2 | 2DROTAST | DRV OVERTEMP ENABLE |
| 0 | 71 | 1 | 2DROIAST | DRV OVERCURRENT ENABLE |
| 0 | 71 | 0 | SPARE | |
| 0 | 72 | 5-7 | SPARE | |
| 0 | 72 | 4 | 2SFLGAST | STOP FLAG ENABLE |
| 0 | 72 | 3 | 2OSLSAST | OPEN SECONDARY LIM SW ENABLE |
| 0 | 72 | 2 | 2OPLSAST | OPEN PRIMARY LIMIT SW ENABLE |
| 0 | 72 | 1 | 2CSLSAST | CLOS SECONDARY LIM SW ENABLE |
| 0 | 72 | 0 | 2CPLSAST | CLOS PRIMARY LIMIT SW ENABLE |
| 0 | 73 | 6-7 | SPARE | |
| 0 | 73 | 5 | 2OSLSADT | OPEN SECONDARY LS DETECTED |
| 0 | 73 | 4 | 2OSLSAAC | OPEN SECONDARY LS ACTIVE |
| 0 | 73 | 3 | 2OPLSAAC | OPEN PRIMARY LS ACTIVE |
| 0 | 73 | 2 | 2CSLSADT | CLOS SECONDARY LS DETECTED |
| 0 | 73 | 1 | 2CSLSAAC | CLOS SECONDARY LS ACTIVE |
| 0 | 73 | 0 | 2CPLSAAC | CLOS PRIMARY LS ACTIVE |
| 0 | 79 | ALL | 2FCPUAST | FORCED COARSE POSITION, "U" AXIS |
| 0 | 80 | ALL | 2FCPVAST | FORCED COARSE POSITION, "V" AXIS |
| 0 | 81 | ALL | 2CBHUAST | CENTER BLANK HI CP, "U" AXIS |
| 0 | 82 | ALL | 2CBLUAST | CENTER BLANK LO CP, "U" AXIS |
| 0 | 83 | ALL | 2CBHVAST | CENTER BLANK HI CP, "V" AXIS |
| 0 | 84 | ALL | 2CBLVAST | CENTER BLANK LO CP, "V" AXIS |
| 0 | 85 | ALL | 2WDTHAST | WIDTH THRESHOLD SETTING |
| 0 | 86 | 4-7 | SPARE | |
| 0 | 86 | 3 | 2CLMDAST | CALIBRATION MODE ENABLE |
| 0 | 86 | 2 | 2FIFOAVR | DATA FIFO ENABLE |
| 0 | 86 | 1 | 2OBNLASL | OBSERVING/NEXT-IN-LINE MODE SELECT |
| 0 | 86 | 0 | 2SPMDASL | SPECT DETECTOR SPECT/IMG MODE SELECT |
| 0 | 87 | 5-7 | SPARE | |
| 0 | 87 | 4 | 2EBLKAVR | EBLK VALIDITY ENABLE |
| 0 | 87 | 3 | 2CBLKAVR | CBLK VALIDITY ENABLE |
| 0 | 87 | 2 | 2ULDIAVR | ULD VALIDITY ENABLE |
| 0 | 87 | 1 | 2WDTHAVR | WIDTH VALIDITY ENABLE |
| 0 | 87 | 0 | 2SHLDAVR | SHIELD VALIDITY ENABLE |
| 0 | 88 | 7 | 2SPONST | SP DET HVPS ON/OFF |

| | | | | |
|---|---|---|---|---|
| 0 | 88 | 6 | 2SPCLST | SP DET HVPS CURRENT LIM ENA |
| 0 | 88 | 5 | 2S1ONST | SHIELD A HVPS ON/OFF |
| 0 | 88 | 4 | 2IMONST | IM DET HVPS ON/OFF |
| 0 | 88 | 3 | 2IMCLST | IM DET HVPS CURRENT LIM ENA |
| 0 | 88 | 2 | 2S2ONST | SHIELD B HVPS ON/OFF |
| 0 | 88 | 0-1 | SPARE | |
| 0 | 89 | 4-7 | | SPARE DIGITAL |
| 0 | 89 | 0-3 | 2S1HVST | SHIELD A HVPS SETTING |
| 0 | 90 | 4-7 | | SPARE DIGITAL |
| 0 | 90 | 0-3 | 2S2HVST | SHIELD B HVPS SETTING |
| 0 | 91 | ALL | | SPARE DIGITAL |
| 0 | 92 | ALL | 2C05PALV | +5V BUS MONITOR |
| 0 | 93 | ALL | 2C15PALV | +15V BUS MONITOR |
| 0 | 94 | ALL | 2C15NALV | -15V BUS MONITOR |
| 0 | 95 | ALL | 2C24PALV | +24V BUS MONITOR |
| 0 | 96 | ALL | 2IMHVLV | IMAGING LOWER MCP HV |
| 0 | 97 | ALL | 2IMHBLV | IMAGING LOWER & UPPER MCP HV |
| 0 | 98 | ALL | 2SPHVLV | SPECT LOWER MCP HV |
| 0 | 99 | ALL | 2SPHBLV | SPECT LOWER & UPPER MCP HV |
| 0 | 100 | ALL | 2S1HVLV | SHIELD 1 HV ANALOG READOUT |
| 0 | 101 | ALL | 2S2HVLV | SHIELD 2 HV ANALOG READOUT |
| 0 | 102 | ALL | 2PRBSCR | PRIMARY BUS CURRENT |
| 0 | 103 | ALL | 2PRBSVL | PRIMARY BUS VOLTAGE |
| 0 | 104 | ALL | 2ULDIALV | UPPER LEVEL DISCR SETTING |
| 0 | 105 | ALL | 2LLDIALV | LOWER LEVEL DISCR SETTING |
| 0 | 106 | ALL | 2FEPRATM | FE PREAMP CARD TEMPERATURE |
| 0 | 107 | ALL | 2CALPALV | CAL PULSER AMPLITUDE SETTING |
| 0 | 108 | ALL | 2GRDVALV | GRID BIAS SETTING |
| 0 | 109 | ALL | 2RSRFALV | RANGE SWITCH SETTING |
| 0 | 110 | ALL | 2SPINATM | SPECTROSCOPY DETECTOR TEMP (INSIDE) |
| 0 | 111 | ALL | 2IMINATM | IMAGING DETECTOR TEMP (INSIDE) |
| 0 | 112 | ALL | | |
| 0 | 113 | ALL | 2LVPLATM | LVPS PLATE TEMPERATURE |
| 0 | 114 | ALL | 2SPHVATM | SPECTROSCOPY DET HVPS TEMP |
| 0 | 115 | ALL | 2IMHVATM | IMAGING DET HVPS TEMPERATURE |
| 0 | 116 | ALL | | |
| 0 | 117 | ALL | | |
| 0 | 118 | ALL | 2SMTRATM | SELECTED MOTOR TEMPERATURE |
| 0 | 119 | ALL | 2FE00ATM | UNASSIGNED FE TEMPERATURE |
| 0 | 120 | ALL | 2CE00ATM | UNASSIGNED CE TEMPERATURE |
| 0 | 121 | ALL | 2CE01ATM | UNASSIGNED CE TEMPERATURE |
| 0 | 122 | ALL | 2TLEVART | TOTAL EVENT RATE, HI BYTE |
| 0 | 123 | ALL | | TOTAL EVENT RATE, LO BYTE |
| 0 | 124 | ALL | 2VLEVART | VALID EVENT RATE, HI BYTE |
| 0 | 125 | ALL | | VALID EVENT RATE, LO BYTE |
| 0 | 126 | ALL | 2SHEVART | SHIELD EVENT RATE, HI BYTE |
| 0 | 127 | ALL | | SHIELD EVENT RATE, LO BYTE |

## 2.2 Primary Science Event Word

(Repeats in the listed groups of 16 bytes in all science telemetry slots after byte 127 of minor frame 0)

Bit Patterns within the 16 byte groups:

| BYTE# | BIT# | DESCRIPTION |
|---|---|---|
| 0 | B7-B0 | Coarse Position V axis |
| 1 | B7-B2 | Coarse Position U axis |
| | B1-B0 | Amplitude scale factor |
| 2 | B7-B0 | V1 axis ADC B11-B4 |

| | | |
|---|---|---|
| 3 | B7-B4 | V1 axis ADC B3-B0 |
| | B3-B0 | V2 axis ADC B11-B8 |
| 4 | B7-B0 | V2 axis ADC B7-B0 |
| 5 | B7-B0 | V3 axis ADC B11-B4 |
| 6 | B7-B4 | V3 axis ADC B3-B0 |
| | B3-B0 | U1 axis ADC B11-B8 |
| 7 | B7-B0 | U1 axis ADC B7-B0 |
| 8 | B7-B0 | U2 axis ADC B11-B4 |
| 9 | B7-B4 | U2 axis ADC B3-B0 |
| | B3-B0 | U3 axis ADC B11-B8 |
| 10 | B7-B0 | U3 axis ADC B7-B0 |
| 11 | B7-B0 | PHA |
| 12 | B7 | V axis triggered |
| | B6 | U axis triggered |
| | B5 | V axis center blank event |
| | B4 | U axis center blank event |
| | B3 | V axis width exceeded |
| | B2 | U axis width exceeded |
| | B1 | Shield PMT active |
| | B0 | SPARE |
| 13 | B7 | Upper Level Discriminator exceeded |
| | B6 | Lower Level Discriminator exceeded |
| | B5 | Detector ID (Img/Spect) |
| | B4 | Sub Major Frame B2 |
| | B3 | Sub Major Frame B1 |
| | B2 | Sub Major Frame B0 |
| | B1 | Time B17 |
| | B0 | Time B16 |
| 14 | B7 | Time B15 |
| | B6 | Time B14 |
| | B5 | Time B13 |
| | B4 | Time B12 |
| | B3 | Time B11 |
| | B2 | Time B10 |
| | B1 | Time B9 |
| | B0 | Time B8 |
| 15 | B7 | Time B7 |
| | B6 | Time B6 |
| | B5 | Time B5 |
| | B4 | Time B4 |
| | B3 | Time B3 |
| | B2 | Time B2 |
| | B1 | Time B1 |
| | B0 | Time B0 |

## 3.0 SCALE FACTORS FOR HRC TELEMETRY

### 3.1 Scale Factors for Voltages and Currents

"m" and "b" are coefficients in the formula $V = m * DN + b$, where V is the voltage being read, DN is the telemetry digital value, and b is the offset of the measurement.

example: 2C15NALV reads digital number 32.

from the table, $m = 0.15625$ and $b = -20$

the voltage is then $V = 0.15625 * 32 + -20 = -15$ volts

HRC voltage measurements in engineering telemetry (all formats)

| MNEMONIC | DESCR | BYT-MF | "m" | "b" | typ "on" value (DN) |
|---|---|---|---|---|---|
| 2P05VAVL | + 5V LVPS, CEA A | 3-268 | 0.0390625 | 0 | 128 |
| 2P15VAVL | +15V LVPS, CEA A | 5-268 | 0.078125 | 0 | 192 |
| 2N15VAVL | +15V LVPS, CEA A | 1-268 | -0.078125 | 0 | 192 |
| 2P24VAVL | +24V LVPS, CEA A | 7-268 | 0.14977 | 0 | 160 |
| 2P05VBVL | + 5V LVPS, CEA B | 4-268 | 0.0390625 | 0 | 128 |
| 2P15VBVL | +15V LVPS, CEA B | 6-268 | 0.078125 | 0 | 192 |
| 2N15VBVL | +15V LVPS, CEA B | 2-268 | -0.078125 | 0 | 192 |
| 2P24VBVL | +24V LVPS, CEA B | 8-268 | 0.14977 | 0 | 160 |

HRC voltage measurements in science telemetry (formats 0 and 1)

| MNEMONIC | DESCR | BYTE * | "m" | "b" | typ "on" value (DN) |
|---|---|---|---|---|---|
| 2C05PALV | + 5V LVPS ** | 92 | 0.078125 | -10 | 192 |
| 2C15PALV | + 15V LVPS ** | 93 | 0.15625 | -20 | 224 |
| 2C15NALV | - 15V LVPS ** | 94 | 0.15625 | -20 | 32 |
| 2C24PALV | + 24V LVPS ** | 95 | 0.234375 | -30 | 231 |
| 2PRBSVL | PRIMARY BUS V * | 103 | 0.3125 | -40 | 217 |
| 2PRBSCR | PRIMARY BUS I * | 102 | 0.0682 | -8.65 | 149 |

* byte number applies for all science header frames in format 1.
** measurement relates to the CEA that is currently powered (A or B).

The units of the following measurements will remain "steps". As such, no calibration factors will apply:

| | |
|---|---|
| 2SPTPAST | SP DET TOP PLATE HV STEP |
| 2SPBPAST | SP DET BOT PLATE HV STEP |
| 2IMTPAST | IM DET TOP PLATE HV STEP |
| 2IMBPAST | IM DET BOT PLATE HV STEP |
| 2S1HVST | SHIELD A HVPS SETTING |
| 2S2HVST | SHIELD B HVPS SETTING |
| 2IMHVLV | IMAGING LOWER MCP HV |
| 2IMHBLV | IMAGING LOWER & UPPER MCP HV |
| 2SPHVLV | SPECT LOWER MCP HV |
| 2SPHBLV | SPECT LOWER & UPPER MCP HV |
| 2S1HVLV | SHIELD 1 HV ANALOG READOUT |
| 2S2HVLV | SHIELD 2 HV ANALOG READOUT |

## 3.2 Scale Factors for Temperatures

HRC temperature measurements in engineering telemetry (all formats)

K = telemetry count
L = 5100*K/255
R = 1/(1/l-1/4500)
T(C) = 1/[a+b*lnR+c(lnR)^3]-273.16

| MNEMONIC | DESCR | a | b | c |
|---|---|---|---|---|
| 2PMT1T | PMT 1 TEMP | 0.00133543 | 0.00025266 | 2.2001E-07 |

a 171.14

b −3.242

c 0.021696

d −5.552 $e^{-5}$

| | | |
|---|---|---|
| 10 | 140.97 | 158.66 |
| 100 | −125.39 | −208 |

| | | | | |
|---|---|---|---|---|
| 2PMT2T | PMT 2 TEMP | 0.00133543 | 0.00025266 | 2.2001E-07 |
| 2DTSTATT | DET HSG TEMP1 | 0.00133543 | 0.00025266 | 2.2001E-07 |
| 2DCENTRT | DET HSG TEMP2 | 0.00133543 | 0.00025266 | 2.2001E-07 |
| 2FHTRMZT | FE BOX TEMP | 0.00133543 | 0.00025266 | 2.2001E-07 |
| 2CHTRPZT | CE BOX TEMP | 0.00133543 | 0.00025266 | 2.2001E-07 |
| 2FRADPYT | +Y TEMP | 0.00133543 | 0.00025266 | 2.2001E-07 |
| 2CEAHVPT | -Y TEMP | 0.00133543 | 0.00025266 | 2.2001E-07 |
| 2CONDMXT | CONDUIT TEMP | 0.00133543 | 0.00025266 | 2.2001E-07 |
| 2UVLSPXT | SNOUT TEMP | 0.00133543 | 0.00025266 | 2.2001E-07 |

HRC temperature measurements in science telemetry (formats 1 and 2)

T(C) = a+bK+cK^2+dK^3 where K = telemetry count

| MNEMONIC | DESCR | a | b | c | d |
|---|---|---|---|---|---|
| 2FEPRATM | FE PREAMP TEMP | 131.47 | -2.29 | 1.42E-2 | -3.55E-05 |
| 2SPINATM | SPECT DET TEMP | 131.47 | -2.29 | 1.42E-2 | -3.55E-05 |
| 2IMINATM | IMAGING DET TEMP | 131.47 | -2.29 | 1.42E-2 | -3.55E-05 |
| 2LVPLATM | LVPS PLATE TEMP | 58.61 | -6.74E-01 | 3.45E-03 | -9.90E-06 |
| 2SPHVATM | SPECT HVPS TEMP | 58.61 | -6.74E-01 | 3.45E-03 | -9.90E-06 |
| 2IMHVATM | IMAG HVPS TEMP | 58.61 | -6.74E-01 | 3.45E-03 | -9.90E-06 |
| 2SMTRATM | SEL MOTOR TEMP | -54.93 | 8.37E-01 | -4.09E-03 | 9.89E-06 |
| 2FE00ATM | FE TEMP | 58.61 | -6.74E-01 | 3.45E-03 | -9.90E-06 |
| 2CE00ATM | CE TEMP 0 | 58.61 | -6.74E-01 | 3.45E-03 | -9.90E-06 |
| 2CE01ATM | CE TEMP 1 | 58.61 | -6.74E-01 | 3.45E-03 | -9.90E-06 |

## 4.0 HRC TELEMETRY CAUTION & WARNING LIST

### 4.1 HRC Data in Engineering Telemetry

BILEVEL TELEMETRY

| Mnem | DESCRIPTION | |
|---|---|---|
| 2FSMRST | FAILSAFE MASTER RELAY ON/OFF | Warning if state = "1" |
| 2FSCAST | FAILSAFE CALSRC RELAY ON/OFF | Warning if state = "1" |
| 2FSPYST | FAILSAFE +Y SHUTTER ON/OFF | Warning if state = "1" |
| 2FSNYST | FAILSAFE -Y SHUTTER ON/OFF | Warning if state = "1" |

ACTIVE ANALOG TELEMETRY

| Mnem | DESCRIPTION | |
|---|---|---|
| 2P05VAVL | SEC +5 BUS VOLTAGE A | Caution > 5.25V, Warning > 5.5V |
| 2P15VAVL | SEC +15 BUS VOLTAGE A | Caution > 16V, Warning > 17V |
| 2N15VAVL | SEC -15 BUS VOLTAGE A | Caution < -16V, Warning < -17V |
| 2P24VAVL | SEC +24 BUS VOLTAGE A | Caution > 25V, Warning > 26V |
| 2P05VBVL | SEC +5 BUS VOLTAGE B | Caution > 5.25V, Warning > 5.5V |
| 2P15VBVL | SEC +15 BUS VOLTAGE B | Caution > 16V, Warning > 17V |
| 2N15VBVL | SEC -15 BUS VOLTAGE B | Caution < -16V, Warning < -17V |
| 2P24VBVL | SEC +24 BUS VOLTAGE B | Caution > 25V, Warning > 26V |

PASSIVE ANALOG TELEMETRY

| Mnem | DESCRIPTION | | |
|---|---|---|---|
| 2PMT1T | HRC PMT 1 TEMP | Caution > 45C, Warning > 50C<br>Caution <-35C, Warning <-38C | T_Pmt1 |
| 2PMT2T | HRC PMT 2 TEMP | Caution > 45C, Warning > 50C<br>Caution <-35C, Warning <-38C | T_Pmt2 |
| 2DTSTATT | HRC DET HSG TEMP1 | Caution > 35C, Warning > 40C<br>Caution <-09C, Warning <-12C | T_OutDet |
| 2DCENTRT | HRC DET HSG TEMP2 | Caution > 35C, Warning > 40C<br>Caution <-09C, Warning <-12C | T_OutDet |
| 2FHTRMZT | HRC FE BOX TEMP | Caution > 45C, Warning > 50C<br>Caution <-35C, Warning <-38C | T_FeaBox |
| 2CHTRPZT | HRC CE BOX TEMP | Caution > 45C, Warning > 50C<br>Caution <-35C, Warning <-38C | T_CEAbox |
| 2FRADPYT | +Y TEMP | Caution > 45C, Warning > 50C<br>Caution <-37C, Warning <-40C | T_PY |
| 2CEAHVPT | -Y TEMP | Caution > 50C, Warning > 55C<br>Caution <-35C, Warning <-38C | T_MY |
| 2CONDMXT | CONDUIT TEMP | Caution > 45C, Warning > 50C<br>Caution <-35C, Warning <-38C | T_conduit |
| 2UVLSPXT | SNOUT TEMP | Caution > 45C, Warning > 50C<br>Caution <-45C, Warning <-48C | T_Snout |

## 4.2 HRC Data in Science Telemetry

SERIAL DIGITAL TELEMETRY

| MNEMONIC | DESCRIPTION | |
|---|---|---|
| 2TLEVART | TOTAL EVENT RATE | Caution > 150 /s, Warning > 200 /s |
| 2SHEVART | SHIELD EVENT RATE | Caution > 15000 /s, Warning>20000 /s |
| 2SPTPAST | SP DET TOP HV STEP | Caution > step 90, Warning > step 92 |
| 2SPBPAST | SP DET BOT HV STEP | Caution > step 102,Warning> step 104 |
| 2IMTPAST | IM DET TOP HV STEP | Caution > step 79, Warning > step 81 |
| 2IMBPAST | IM DET BOT HV STEP | Caution > step 91, Warning > step 93 |
| 2SMOIAST | MOTOR OVERCURRENT | Caution if "1" |
| 2SMOTAST | MOTOR OVERTEMP | Caution if "1" |
| 2SPMDASL | SPECT/IMG MODE SEL | Caution if "1" |
| 2SPCL ST | SP HVPS ILIM ENA | Caution if "0" |
| 2IMCL ST | IM HVPS ILIM ENA | Caution if "0" |
| 2S1HV ST | SHIELD 1 HVPS SET | Caution > step 12, Warning > step 13 |
| 2S2HV ST | SHIELD 2 HVPS SET | Caution > step 4, Warning > step 5 |
| 2C05PALV | +5V BUS MONITOR | Caution > +5.2V, Warning > +5.5V |
| 2C15PALV | +15V BUS MONITOR | Caution > +15.5V, Warning > +17V |
| 2C15NALV | -15V BUS MONITOR | Caution < -15.5V, Warning < -17V |
| 2C24PALV | +24V BUS MONITOR | Caution > +24.5V, Warning > +26V |
| 2IMHVLV | IMAG LOWER MCP HV | Caution < step 80, Warning < step 78 |
| 2IMHBLV | IMAG UPPER MCP HV | Caution < step 87, Warning < step 85 |
| 2SPHVLV | SPEC LOWER MCP HV | Caution < step 74, Warning < step 72 |
| 2SPHBLV | SPEC UPPER MCP HV | Caution < step 81, Warning < step 79 |
| 2S1HVLV | SHIELD 1 HV ANALOG | Caution < step 81, Warning < step 79 |
| 2S2HVLV | SHIELD 2 HV ANALOG | Caution < step 86, Warning < step 84 |
| 2PRBSCR | PRIMARY BUS CURRENT | Caution > step 2.3A, Warning > 2.5A |
| 2PRBSVL | PRIMARY BUS VOLTAGE | Caution > step 35V, Warning > 37V |
| 2FEPRATM | FE PREAMP TEMP | Caution > 50C, Warning > 55C<br>Caution <-42C, Warning <-45C |
| 2SPINATM | SPECT DET TEMP | Caution > 35C, Warning > 40C<br>Caution <-11C, Warning <-14C |
| 2IMINATM | IMAGING DET TEMP | Caution > 35C, Warning > 40C<br>Caution <-11C, Warning <-14C |

| | | |
|---|---|---|
| 2LVPLATM | LVPS PLATE | Caution > 50C, Warning > 55C<br>Caution <-32C, Warning <-35C |
| 2SPHVATM | SPECT HVPS TEMP | Caution > 50C, Warning > 55C<br>Caution <-32C, Warning <-35C |
| 2IMHVATM | IMAG HVPS TEMP | Caution > 50C, Warning > 55C<br>Caution <-32C, Warning <-35C |
| 2SMTRATM | SEL MOTOR TEMP | Caution > 45C, Warning > 50C<br>Caution <-17C, Warning <-20C |
| 2FE00ATM | FE TEMP | Caution > 45C, Warning > 50C<br>Caution <-32C, Warning <-35C |
| 2CE00ATM | CE TEMP 0 | Caution > 45C, Warning > 50C<br>Caution <-32C, Warning <-35C |
| 2CE01ATM | CE TEMP 1 | Caution > 45C, Warning > 50C<br>Caution <-32C, Warning <-35C |

**HRC MSID LIST**

| | |
|---|---|
| 215NCAST | -15V LVPS ON/OFF |
| 215PCAST | +15V LVPS ON/OFF |
| 224PCAST | +24V LVPS ON/OFF |
| 2ALMTAST | ALL MOTORS DESELECTED |
| 2C05PALV | +5V BUS MONITOR |
| 2C15NALV | -15V BUS MONITOR |
| 2C15PALV | +15V BUS MONITOR |
| 2C1LVBS | S/C BUS SELECT, CEA A |
| 2C24PALV | +24V BUS MONITOR |
| 2C2LVBS | S/C BUS SELECT, CEA B |
| 2CALPALV | CAL PULSER AMPLITUDE MONITOR |
| 2CBHUAST | CENTER BLANK HIGH CP, U AXIS |
| 2CBHVAST | CENTER BLANK HIGH CP, V AXIS |
| 2CBLKAVR | CENTER BLANK VALIDITY ENABLE |
| 2CBLUAST | CENTER BLANK LOW CP, U AXIS |
| 2CBLVAST | CENTER BLANK LOW CP, V AXIS |
| 2CE00ATM | CE TEMPERATURE BOTTOM CENTER WALL |
| 2CE01ATM | CE TEMPERATURE TOP CENTER WALL |
| 2CEAHVPT | CEA RADIATOR TEMPERATURE AT CENTER |
| 2CHTRPZT | CENTRAL ELECTRONICS BOX TEMP |
| 2CLMDAST | CALIBRATION MODE ON |
| 2CLMTAST | CALSRC MOTOR SELECTED |
| 2CONDMXT | CONDUIT -X FACE TEMPERATURE |
| 2CPLSAAC | CLOS PRIMARY LS ACTIVE |
| 2CPLSAST | CLOS PRIMARY LIMIT SWITCH ENABLE |
| 2CSLSAAC | CLOS SECONDARY LS ACTIVE |
| 2CSLSADT | CLOS SECONDARY LS DETECTED |
| 2CSLSAST | CLOS SECONDARY LIMIT SWITCH ENABLE |
| 2CSLSHM | CAL SOURCE LIMIT SWITCH HOME |
| 2CSLSMX | CAL SOURCE LIMIT SWITCH MAX TRAVEL |
| 2DCENTRT | DETECTOR HOUSING TEMP 2 |
| 2DETART | DETECTOR EVENT RATE A |
| 2DETBRT | DETECTOR EVENT RATE B |
| 2DRLSCL | DOOR LIMIT SWITCH CLOSED |
| 2DRLSOP | DOOR LIMIT SWITCH OPEN |
| 2DRMTAST | DOOR MOTOR SELECTED |
| 2DROIAST | DRV OVERCURRENT ENABLE |
| 2DROTAST | DRV OVERTEMP ENABLE |
| 2DTSTATT | DETECTOR HOUSING TEMP 1 |
| 2EBLKAVR | EDGE BLANK VALIDITY ENABLE |
| 2ELEASS | SHIELD SIGNAL SELECT, ELECTRONICS A |
| 2ELEBSS | SHIELD SIGNAL SELECT, ELECTRONICS B |
| 2FCPUAST | FORCED COARSE POSITION U AXIS |
| 2FCPVAST | FORCED COARSE POSITION V AXIS |
| 2FE00ATM | FRONT END TEMPERATURE RT2 |
| 2FEPRATM | FE PREAMP CARD TEMPERATURE |
| 2FHTRMZT | FRONT END ELECTRONICS BOX TEMPERATURE |
| 2FIFOAVR | DATA FIFO ENABLE |
| 2FRADPYT | FRONT END ASSEMBLY +Y AT RADIATOR CENTER TEMP |
| 2FSCAST | FAILSAFE CALSRC ENABLE/DISABLE |

| | |
|---|---|
| 2FSMRST | FAILSAFE MASTER RELAY ENABLE/DISABLE |
| 2FSNYST | FAILSAFE -Y SHUTTER ENAB/DISA |
| 2FSPYST | FAILSAFE +Y SHUTTER ENAB/DISA |
| 2GRDVALV | GRID BIAS SETTING MONITOR |
| 2IMBPAST | IMAGING DET BOTTOM PLATE HV STEP |
| 2IMCLST | IMAGING DET HVPS CURRENT LIMIT ENABLE |
| 2IMHBLV | IMAGING LOWER & UPPER MCP HV MONITOR |
| 2IMHVATM | IMAGING DET HVPS TEMPERATURE |
| 2IMHVBS | CEA BUS SELECT, IMAGING HVPS |
| 2IMHVLV | IMAGING LOWER MCP HV MONITOR |
| 2IMINATM | IMAGING DETECTOR TEMPERATURE (INSIDE) |
| 2IMONST | IMAGING DETECTOR HVPS ON/OFF |
| 2IMTPAST | IMAGING DET TOP PLATE HV STEP |
| 2LLDIALV | TRIGGER LEVEL DISCRIMINATOR MONITOR |
| 2LVPLATM | LVPS PLATE TEMP |
| 2MCLAAMD | MOTOR CMD REGISTER MOVE TO LIMIT SWITCH A |
| 2MCLBAMD | MOTOR CMD REGISTER MOVE TO LIMIT SWITCH B |
| 2MCMDARS | MOTION CONTROL MODE RESET -- 2MCMDARS |
| 2MCNAAMD | MOTOR CMD REGISTER MV NSTEPS TOWARD A |
| 2MCNBAMD | MOTOR CMD REGISTER MV NSTEPS TOWARD B |
| 2MCPRAMD | MOTOR COMMAND REGISTER MOVE TO POSITION REGISTER |
| 2MDIRAST | MOTOR DIRECTION |
| 2MDRVAST | MOTOR CMD REGISTER MOTOR DRIVE ENABLE |
| 2MSDRAMD | MOTOR DRIVE ENABLE |
| 2MSLAAMD | MOTOR STATUS REGISTER MOVE TO LIMIT SWITCH A |
| 2MSLBAMD | MOTOR STATUS REGISTER MOVE TO LIMIT SWITCH B |
| 2MSMDARS | MOTION CONTROL MODE RESET -- 2MSMDARS |
| 2MSNAAMD | MOTOR STATUS REGISTER MV NSTEPS TOWARD A |
| 2MSNBAMD | MOTOR STATUS REGISTER MV NSTEPS TOWARD B |
| 2MSPRAMD | MOTOR STATUS REGISTER MOVE TO POSITION R |
| 2MYLSHM | -Y SHUTTER LIMIT SWITCH HOME |
| 2MYLSMX | -Y SHUTTER LIMIT SWITCH MAX TRAVEL |
| 2N15VAVL | SECONDARY -15 VOLTAGE A |
| 2N15VBVL | SECONDARY -15 VOLTAGE B |
| 2NYMTAST | -Y SHUTTER MOTOR SELECTED |
| 2OBNLASL | OBSERVING/NEXT-IN-LINE MODE SELECT |
| 2OHIRADF | HRC HIGH RADIATION FLAG |
| 2OLORADF | HRC LOW RADIATION FLAG |
| 2OPLSAAC | OPEN PRIMARY LS ACTIVE |
| 2OPLSAST | OPEN PRIMARY LIMIT SWITCH ENABLE |
| 2OSLSAAC | OPEN SECONDARY LS ACTIVE |
| 2OSLSADT | OPEN SECONDARY LS DETECTED |
| 2OSLSAST | OPEN SECONDARY LIMIT SWITCH ENABLE |
| 2P05VAVL | SECONDARY +5 VOLTAGE A |
| 2P05VBVL | SECONDARY +5 VOLTAGE B |
| 2P15VAVL | SECONDARY +15 VOLTAGE A |
| 2P15VBVL | SECONDARY +15 VOLTAGE B |
| 2P24VAVL | SECONDARY +24 VOLTAGE A |
| 2P24VBVL | SECONDARY +24 VOLTAGE B |
| 2PMT1T | PMT 1 TEMPERATURE |
| 2PMT2T | PMT 2 TEMPERATURE |
| 2PRBSCR | PRIMARY BUS CURRENT |

| | |
|---|---|
| 2PRBSVL | PRIMARY BUS VOLTAGE |
| 2PREADS | DETECTOR SELECT, PREAMP A |
| 2PREBDS | DETECTOR SELECT, PREAMP B |
| 2PS5AON | +5V LV POWER SUPPLY A ON/OFF |
| 2PS5BON | +5V LV POWER SUPPLY B ON/OFF |
| 2PYLSHM | +Y SHUTTER LIMIT SWITCH HOME |
| 2PYLSMX | +Y SHUTTER LIMIT SWITCH MAX TRAVEL |
| 2PYMTAST | +Y SHUTTER MOTOR SELECTED |
| 2RSRFALV | RANGE SWITCH ANALOG SETTING |
| 2S1HVBS | CEA BUS SELECT, SHIELD A HVPS |
| 2S1HVLV | SHIELD A HV MONITOR |
| 2S1HVST | SHIELD A HVPS SETTING |
| 2S1ONST | SHIELD A HVPS ON/OFF |
| 2S2HVBS | CEA BUS SELECT, SHIELD B HVPS |
| 2S2HVLV | SHIELD B HV MONITOR |
| 2S2HVST | SHIELD B HVPS SETTING |
| 2S2ONST | SHIELD B HVPS ON/OFF |
| 2SCTHAST | STEP CTR LAST VALUE |
| 2SFLGAST | STOP FLAG ENABLE |
| 2SHEV1RT | SHIELD EVENT RATE 1 |
| 2SHEV2RT | SHIELD EVENT RATE 2 |
| 2SHLDART | SHIELD RATE A |
| 2SHLDAVR | SHIELD DISCR VALIDITY ENABLE |
| 2SHLDBRT | SHIELD RATE B |
| 2SMOIAST | SELECTED MOTOR OVERCURRENT FLAG |
| 2SMOTAST | SELECTED MOTOR OVERTEMPERATURE FLAG |
| 2SMTRATM | SELECTED MOTOR TEMPERATURE |
| 2SPBPAST | SPECTROSCOPY DET BOTTOM PLATE HV STEP |
| 2SPCLST | SPECTROSCOPY DET HVPS CURRENT LIMIT ENAB |
| 2SPHBLV | SPECTROSCOPY UPPER MCP HV MONITOR |
| 2SPHVATM | SPECTROSCOPY DET HVPS TEMPERATURE |
| 2SPHVBS | BUS SELECT, SPECTROSCOPY HVPS |
| 2SPHVLV | SPECTROSCOPY LOWER MCP HV MONITOR |
| 2SPINATM | SPECTROSCOPY DETECTOR TEMPERATURE (INSIDE) |
| 2SPMDASL | SPECT DETECTOR SPECT/IMG MODE SELECT |
| 2SPONST | SPECTROSCOPY DETECTOR HVPS ON/OFF |
| 2SPTPAST | SPECTROSCOPY DET TOP PLATE HV STEP |
| 2TLEV1RT | TOTAL EVENT RATE 1 |
| 2TLEV2RT | TOTAL EVENT RATE 2 |
| 2ULDIALV | UPPER LEVEL DISCRIMINATOR SETTING |
| 2ULDIAVR | UPPER LEVEL DISCR VALIDITY ENABLE |
| 2UVLSPXT | UV LIGHT SHIELD, NEXT TO SNOUT TEMP |
| 2VLEV1RT | VALID EVENT RATE 1 |
| 2VLEV2RT | VALID EVENT RATE 2 |
| 2WDTHAST | WIDTH THRESHOLD SETTING |
| 2WDTHAVR | WIDTH DISCR VALIDITY ENABLE |

msidlist 10JUN99

| msid | hrcmsid | confid | conf | rl | yl | yu | ru | | |
|---|---|---|---|---|---|---|---|---|---|
| 2TLEV1RT | | R_tevt1 | 1 | idef | -1 | -1 | 50 | 100 | |
| 2TLEV1RT | | R_tevt1 | 2 | sdef | -1 | -1 | 50 | 100 | |
| 2VLEV1RT | | R_vevt1 | 1 | idef | -1 | -1 | 50 | 100 | |
| 2VLEV1RT | | R_vevt1 | 2 | sdef | -1 | -1 | 50 | 100 | |
| 2SHEV1RT | | R_shield1 | 1 | idef | -1 | -1 | 150 | 200 | |
| 2SHEV2RT | | R_shield1 | 2 | sdef | -1 | -1 | 150 | 200 | |
| 2TLEV2RT | | R_tevt2 | 1 | idef | -1 | -1 | 50 | 100 | |
| 2TLEV2RT | | R_tevt2 | 2 | sdef | -1 | -1 | 50 | 100 | |
| 2VLEV2RT | | R_vevt2 | 1 | idef | -1 | -1 | 50 | 100 | |
| 2VLEV2RT | | R_vevt2 | 2 | sdef | -1 | -1 | 50 | 100 | |
| 2SHEV2RT | | R_shield2 | 1 | idef | -1 | -1 | 150 | 200 | |
| 2SHEV2RT | | R_shield2 | 2 | sdef | -1 | -1 | 150 | 200 | |
| 224PCAST | | S_LvpsP24 | 1 | idef | 0 | 0 | 2 | 2 | |
| 224PCAST | | S_LvpsP24 | 2 | sdef | 0 | 0 | 2 | 2 | |
| 215PCAST | | S_LvpsP15 | 1 | idef | 0 | 0 | 2 | 2 | |
| 215PCAST | | S_LvpsP15 | 2 | sdef | 0 | 0 | 2 | 2 | |
| 215NCAST | | S_LvpsM15 | 1 | idef | -1 | -1 | 2 | 2 | |
| 215NCAST | | S_LvpsM15 | 2 | sdef | -1 | -1 | 2 | 2 | |
| 2FCPUAST | | ForcedCpU | 1 | idef | -1 | -1 | 1 | 1 | |
| 2FCPUAST | | ForcedCpU | 2 | sdef | -1 | -1 | 1 | 1 | |
| 2FCPVAST | | ForcedCpV | 1 | idef | -1 | -1 | 1 | 1 | |
| 2FCPVAST | | ForcedCpV | 2 | sdef | -1 | -1 | 1 | 1 | |
| 2CBHUAST | | CenterBlankHiCpU | | 1 | idef | 254 | 254 | 256 | 256 |
| 2CBHUAST | | CenterBlankHiCpU | | 2 | sdef | 254 | 254 | 256 | 256 |
| 2CBLUAST | | CenterBlankLoCpU | | 1 | idef | -1 | -1 | 1 | 1 |
| 2CBLUAST | | CenterBlankLoCpU | | 2 | sdef | -1 | -1 | 1 | 1 |
| 2CBHVAST | | CenterBlankHiCpV | | 1 | idef | 254 | 254 | 256 | 256 |
| 2CBHVAST | | CenterBlankHiCpV | | 2 | sdef | 254 | 254 | 256 | 256 |
| 2CBLVAST | | CenterBlankLoCpV | | 1 | idef | -1 | -1 | 1 | 1 |
| 2CBLVAST | | CenterBlankLoCpV | | 2 | sdef | -1 | -1 | 1 | 1 |
| 2WDTHAST | | WidthThreshold | 1 | idef | 2 | 2 | 4 | 4 | |
| 2WDTHAST | | WidthThreshold | 2 | sdef | 2 | 2 | 4 | 4 | |
| 2CLMDAST | | CalModeEnable | 1 | idef | -1 | -1 | 1 | 1 | |
| 2CLMDAST | | CalModeEnable | 2 | sdef | -1 | -1 | 1 | 1 | |
| 2FIFOAVR | | DataFifoEnable | 1 | idef | 0 | 0 | 2 | 2 | |
| 2FIFOAVR | | DataFifoEnable | 2 | sdef | 0 | 0 | 2 | 2 | |
| 2SPMDASL | | S_InstSelect | 1 | idef | 0 | 0 | 2 | 2 | |
| 2SPMDASL | | S_InstSelect | 2 | sdef | 0 | 0 | 2 | 2 | |
| 2EBLKAVR | | EdgeBlkValidityEnable | | 1 | idef | -1 | -1 | 1 | 1 |
| 2EBLKAVR | | EdgeBlkValidityEnable | | 2 | sdef | -1 | -1 | 1 | 1 |
| 2CBLKAVR | | CtrBlkValidityEnable | | 1 | idef | -1 | -1 | 1 | 1 |
| 2CBLKAVR | | CtrBlkValidityEnable | | 2 | sdef | -1 | -1 | 1 | 1 |
| 2ULDIAVR | | ULDValidityEnable | | 1 | idef | -1 | -1 | 1 | 1 |
| 2ULDIAVR | | ULDValidityEnable | | 2 | sdef | -1 | -1 | 1 | 1 |
| 2WDTHAVR | | WidValidityEnable | | 1 | idef | -1 | -1 | 1 | 1 |
| 2WDTHAVR | | WidValidityEnable | | 2 | sdef | -1 | -1 | 1 | 1 |
| 2SHLDAVR | | ShldValidityEnable | | 1 | idef | -1 | -1 | 1 | 1 |
| 2SHLDAVR | | ShldValidityEnable | | 2 | sdef | -1 | -1 | 1 | 1 |
| 2SPONST | S_SpHvps | | 1 | idef | -1 | -1 | 1 | 1 | |
| 2SPONST | S_SpHvps | | 2 | sdef | -1 | -1 | 1 | 2 | |
| 2SPCLST | S_SpHvpsCurLim | | 1 | idef | 0 | 0 | 2 | 3 | |
| 2SPCLST | S_SpHvpsCurLim | | 2 | sdef | -1 | 0 | 2 | 3 | |
| 2S1ONST | S_ShldA 1 | | idef | -1 | -1 | 1 | 2 | | |
| 2S1ONST | S_ShldA 2 | | sdef | -1 | -1 | 1 | 2 | | |
| 2IMONST | S_ImHvps | | 1 | idef | -1 | -1 | 1 | 2 | |
| 2IMONST | S_ImHvps | | 2 | sdef | -1 | -1 | 1 | 1 | |
| 2IMCLST | S_ImHvpsCurLim | | 1 | idef | -1 | 0 | 2 | 3 | |
| 2IMCLST | S_ImHvpsCurLim | | 1 | idef | -1 | 0 | 2 | 3 | |
| 2IMCLST | S_ImHvpsCurLim | | 2 | sdef | 0 | 0 | 2 | 3 | |
| 2IMCLST | S_ImHvpsCurLim | | 2 | sdef | 0 | 0 | 2 | 3 | |
| 2S2ONST | S_ShldB 1 | | idef | -1 | -1 | 1 | 1 | | |
| 2S2ONST | S_ShldB 2 | | sdef | -1 | -1 | 1 | 1 | | |
| 2S1HVST | V_ShldAHVStep | | 1 | idef | -2 | -1 | 12 | 13 | |
| 2S1HVST | V_ShldAHVStep | | 2 | sdef | -2 | -1 | 12 | 13 | |
| 2S2HVST | V_ShldBHVStep | | 1 | idef | -1 | -1 | 1 | 1 | |
| 2S2HVST | V_ShldBHVStep | | 2 | sdef | -1 | -1 | 1 | 1 | |
| 2C05PALV | | P5BusMon | | 1 | idef | 4.5 | 4.8 | 5.2 | 5.5 |

| | | | | | | | | |
|---|---|---|---|---|---|---|---|---|
| 2C05PALV | P5BusMon | 2 | sdef | 4.5 | 4.8 | 5.2 | 5.5 | |
| 2C15PALV | P15BusMon | 1 | idef | 13.0 | 14.5 | 15.5 | 17 | |
| 2C15PALV | P15BusMon | 2 | sdef | 13.0 | 14.5 | 15.5 | 17 | |
| 2C15NALV | M15BusMon | 1 | idef | -17.0 | -15.5 | -14.5 | -13.0 | |
| 2C15NALV | M15BusMon | 2 | sdef | -17.0 | -15.5 | -14.5 | -13.0 | |
| 2C24PALV | P24BusMon | 1 | idef | 22 | 23.5 | 24.5 | 26 | |
| 2C24PALV | P24BusMon | 2 | sdef | 22 | 23.5 | 24.5 | 26 | |
| 2IMHVLV | V_ImBotHV | 1 | idef | 78 | 79 | 128 | 128 | |
| 2IMHVLV | V_ImBotHV | 2 | sdef | 126 | 126 | 128 | 128 | |
| 2IMBPAST | V_ImBotHVStep | 1 | idef | -1 | -1 | 91 | 92 | |
| 2IMBPAST | V_ImBotHVStep | 2 | sdef | -1 | -1 | 1 | 1 | |
| 2IMHBLV | V_ImTopHV | 1 | idef | 85 | 86 | 128 | 128 | |
| 2IMHBLV | V_ImTopHV | 2 | sdef | 126 | 126 | 128 | 128 | |
| 2IMTPAST | V_ImTopHVStep | 1 | idef | -1 | -1 | 79 | 80 | |
| 2IMTPAST | V_ImTopHVStep | 2 | sdef | -1 | -1 | 1 | 1 | |
| 2SPHVLV | V_SpBotHV | 1 | idef | 126 | 126 | 128 | 128 | |
| 2SPHVLV | V_SpBotHV | 2 | sdef | 72 | 73 | 128 | 128 | |
| 2SPBPAST | V_SpBotHVStep | 1 | idef | -1 | -1 | 1 | 1 | |
| 2SPBPAST | V_SpBotHVStep | 2 | sdef | -1 | -1 | 102 | 103 | |
| 2SPHBLV | V_SpTopHV | 1 | idef | 126 | 126 | 128 | 128 | |
| 2SPHBLV | V_SpTopHV | 2 | sdef | 79 | 80 | 128 | 128 | |
| 2SPTPAST | V_SpTopHVStep | 1 | idef | -1 | -1 | 1 | 1 | |
| 2SPTPAST | V_SpTopHVStep | 2 | sdef | -1 | -1 | 90 | 91 | |
| 2S1HVLV | V_ShldAHV | 1 | idef | 79 | 80 | 128 | 128 | |
| 2S1HVLV | V_ShldAHV | 2 | sdef | 79 | 80 | 128 | 128 | |
| 2S2HVLV | V_ShldBHV | 1 | idef | 126 | 126 | 128 | 128 | |
| 2S2HVLV | V_ShldBHV | 2 | sdef | 126 | 126 | 128 | 128 | |
| 2S2HVST | V_ShldBHVStep | 1 | idef | -1 | -1 | 1 | 1 | |
| 2S2HVST | V_ShldBHVStep | 2 | sdef | -1 | -1 | 1 | 1 | |
| 2PRBSCR | PrimBusI | 1 | idef | 140 | 145 | 155 | 160 | |
| 2PRBSCR | PrimBusI | 2 | sdef | 140 | 145 | 155 | 160 | |
| 2PRBSVL | PrimBusV | 1 | idef | 22 | 23 | 34 | 35 | |
| 2PRBSVL | PrimBusV | 2 | sdef | 22 | 23 | 34 | 35 | |
| 2ULDIAVR | ULDValidityEnable | | 1 | idef | -1 | -1 | 1 | 1 |
| 2ULDIAVR | ULDValidityEnable | | 2 | sdef | -1 | -1 | 1 | 1 |
| 2ULDIALV | ULD | 1 | idef | 254 | 254 | 256 | 256 | |
| 2ULDIALV | ULD | 2 | sdef | 254 | 254 | 256 | 256 | |
| 2LLDIALV | LLD | 1 | idef | 130 | 130 | 132 | 132 | |
| 2LLDIALV | LLD | 2 | sdef | 130 | 130 | 132 | 132 | |
| 2FEPRATM | T_FePreAmp | 1 | idef | -35 | -32 | 50 | 55 | |
| 2FEPRATM | T_FePreAmp | 2 | sdef | -35 | -32 | 50 | 55 | |
| 2CALPALV | CalPulserSetting | | 1 | idef | 126 | 126 | 128 | 128 |
| 2CALPALV | CalPulserSetting | | 2 | sdef | 126 | 126 | 128 | 128 |
| 2GRDVALV | GridBias | 1 | idef | 140 | 140 | 142 | 142 | |
| 2GRDVALV | GridBias | 2 | sdef | 140 | 140 | 142 | 142 | |
| 2RSRFALV | RangeSwSetting | 1 | idef | 172 | 172 | 174 | 174 | |
| 2RSRFALV | RangeSwSetting | 2 | sdef | 172 | 172 | 174 | 174 | |
| 2SPINATM | T_Spec | 1 | idef | -15 | -12 | 35 | 40 | |
| 2SPINATM | T_Spec | 2 | sdef | -15 | -12 | 35 | 40 | |
| 2IMINATM | T_Img | 1 | idef | -15 | -12 | 35 | 40 | |
| 2IMINATM | T_Img | 2 | sdef | -15 | -12 | 35 | 40 | |
| 2LVPLATM | T_Lvps | 1 | idef | -35 | -32 | 50 | 55 | |
| 2LVPLATM | T_Lvps | 2 | sdef | -35 | -32 | 50 | 55 | |
| 2SPHVATM | T_SpHvps | 1 | idef | -35 | -32 | 50 | 55 | |
| 2SPHVATM | T_SpHvps | 2 | sdef | -35 | -32 | 50 | 55 | |
| 2IMHVATM | T_ImHvps | 1 | idef | -35 | -32 | 50 | 55 | |
| 2IMHVATM | T_ImHvps | 2 | sdef | -35 | -32 | 50 | 55 | |
| 2SMTRATM | T_Motor | 1 | idef | -20 | -17 | 45 | 50 | |
| 2SMTRATM | T_Motor | 2 | sdef | -20 | -17 | 45 | 50 | |
| 2FHTRMZT | T_FEABox | 0 | off | -37.5 | -35.5 | 35.5 | 37.5 | |
| 2FHTRMZT | T_FEABox | 1 | idef | -37.5 | -35.5 | 35.5 | 37.5 | |
| 2FHTRMZT | T_FEABox | 2 | sdef | -37.5 | -35.5 | 35.5 | 37.5 | |
| 2FE00ATM | T_FEA | 1 | idef | -35 | -32 | 45 | 50 | |
| 2FE00ATM | T_FEA | 2 | sdef | -35 | -32 | 45 | 50 | |
| 2CE00ATM | T_CEA0 | 1 | idef | -35 | -32 | 45 | 50 | |
| 2CE00ATM | T_CEA0 | 2 | sdef | -35 | -32 | 45 | 50 | |
| 2CE01ATM | T_CEA1 | 1 | idef | -35 | -32 | 45 | 50 | |
| 2CE01ATM | T_CEA1 | 2 | sdef | -35 | -32 | 45 | 50 | |
| 2C1LVBS | S_BusSelCeaALvps | 0 | off | -1 | -1 | 1 | 1 | |

| | | | | | | | |
|---|---|---|---|---|---|---|---|
| 2C1LVBS | S_BusSelCeaALvps | 1 | idef | -1 | -1 | 1 | 1 |
| 2C1LVBS | S_BusSelCeaALvps | 2 | sdef | -1 | -1 | 1 | 1 |
| 2IMHVBS | S_BusSelImgHvps 0 | off | -1 | -1 | 1 | 1 | |
| 2IMHVBS | S_BusSelImgHvps 1 | idef | -1 | -1 | 1 | 1 | |
| 2IMHVBS | S_BusSelImgHvps 2 | sdef | -1 | -1 | 1 | 1 | |
| 2S1HVBS | S_BusSelShldAHvps | 0 | off | -1 | -1 | 1 | 1 |
| 2S1HVBS | S_BusSelShldAHvps | 1 | idef | -1 | -1 | 1 | 1 |
| 2S1HVBS | S_BusSelShldAHvps | 2 | sdef | -1 | -1 | 1 | 1 |
| 2PREADS | S_DetSelPreampA 1 | idef | -1 | -1 | 1 | 1 | |
| 2PREADS | S_DetSelPreampA 2 | sdef | 0 | 0 | 2 | 2 | |
| 2ELEASS | S_ShldPmtSelPreampA | 0 | off | 0 | 0 | 2 | 2 |
| 2ELEASS | S_ShldPmtSelPreampA | 1 | idef | 0 | 0 | 2 | 2 |
| 2ELEASS | S_ShldPmtSelPreampA | 2 | sdef | 0 | 0 | 2 | 2 |
| 2PS5AON | S_P5LvpsA 0 | off | -1 | -1 | 1 | 1 | |
| 2PS5AON | S_P5LvpsA 1 | idef | 0 | 0 | 2 | 2 | |
| 2PS5AON | S_P5LvpsA 2 | sdef | 0 | 0 | 2 | 2 | |
| 2DRLSOP | S_PriDoorLSOpen 0 | off | -1 | 0 | 2 | 3 | |
| 2DRLSOP | S_PriDoorLSOpen 1 | idef | -1 | 0 | 2 | 3 | |
| 2DRLSOP | S_PriDoorLSOpen 2 | sdef | -1 | 0 | 2 | 3 | |
| 2PYLSHM | S_PYShutterLSHome | 0 | off | -1 | 0 | 2 | 3 |
| 2PYLSHM | S_PYShutterLSHome | 1 | idef | -1 | 0 | 2 | 3 |
| 2PYLSHM | S_PYShutterLSHome | 2 | sdef | -1 | 0 | 2 | 3 |
| 2FSMRST | S_FailSafeMasterRelay | 0 | off | 0 | 0 | 2 | 2 |
| 2FSMRST | S_FailSafeMasterRelay | 1 | idef | 0 | 0 | 2 | 2 |
| 2FSMRST | S_FailSafeMasterRelay | 2 | sdef | 0 | 0 | 2 | 2 |
| 2FSCAST | S_FailSafeCalSrcRelay | 0 | off | 0 | 0 | 2 | 2 |
| 2FSCAST | S_FailSafeCalSrcRelay | 1 | idef | 0 | 0 | 2 | 2 |
| 2FSCAST | S_FailSafeCalSrcRelay | 2 | sdef | 0 | 0 | 2 | 2 |
| 2C2LVBS | S_BusSelCeaBLvps | 0 | off | 0 | 0 | 2 | 2 |
| 2C2LVBS | S_BusSelCeaBLvps | 1 | idef | 0 | 0 | 2 | 2 |
| 2C2LVBS | S_BusSelCeaBLvps | 2 | sdef | 0 | 0 | 2 | 2 |
| 2SPHVBS | S_BusSelSpecHvps | 0 | off | -1 | -1 | 1 | 1 |
| 2SPHVBS | S_BusSelSpecHvps | 1 | idef | -1 | -1 | 1 | 1 |
| 2SPHVBS | S_BusSelSpecHvps | 2 | sdef | -1 | -1 | 1 | 1 |
| 2S2HVBS | S_BusSelShldBHvps | 0 | off | -1 | -1 | 1 | 1 |
| 2S2HVBS | S_BusSelShldBHvps | 1 | idef | -1 | -1 | 1 | 1 |
| 2S2HVBS | S_BusSelShldBHvps | 2 | sdef | -1 | -1 | 1 | 1 |
| 2PREBDS | S_DetSelPreampB 1 | idef | 0 | 0 | 2 | 2 | |
| 2PREBDS | S_DetSelPreampB 2 | sdef | -1 | -1 | 1 | 1 | |
| 2ELEBSS | S_ShldPmtSelPreampB | 0 | off | -1 | -1 | 1 | 1 |
| 2ELEBSS | S_ShldPmtSelPreampB | 1 | idef | -1 | -1 | 1 | 1 |
| 2ELEBSS | S_ShldPmtSelPreampB | 2 | sdef | -1 | -1 | 1 | 1 |
| 2PS5BON | S_P5LvpsB 0 | off | -1 | -1 | 1 | 1 | |
| 2PS5BON | S_P5LvpsB 1 | idef | -1 | -1 | 1 | 1 | |
| 2PS5BON | S_P5LvpsB 2 | sdef | -1 | -1 | 1 | 1 | |
| 2MYLSHM | S_MYShutterLSHome | 0 | off | -1 | 0 | 2 | 3 |
| 2MYLSHM | S_MYShutterLSHome | 1 | idef | -1 | 0 | 2 | 3 |
| 2MYLSHM | S_MYShutterLSHome | 2 | sdef | -1 | 0 | 2 | 3 |
| 2CSLSHM | S_CalSrcPriLSHome | 0 | off | -1 | 0 | 2 | 3 |
| 2CSLSHM | S_CalSrcPriLSHome | 1 | idef | -1 | 0 | 2 | 3 |
| 2CSLSHM | S_CalSrcPriLSHome | 2 | sdef | -1 | 0 | 2 | 3 |
| 2FSPYST | S_FailSafePYShutter | 0 | off | 0 | 0 | 2 | 2 |
| 2FSPYST | S_FailSafePYShutter | 1 | idef | 0 | 0 | 2 | 2 |
| 2FSPYST | S_FailSafePYShutter | 2 | sdef | 0 | 0 | 2 | 2 |
| 2FSNYST | S_FailSafeMYShutter | 0 | off | 0 | 0 | 2 | 2 |
| 2FSNYST | S_FailSafeMYShutter | 1 | idef | 0 | 0 | 2 | 2 |
| 2FSNYST | S_FailSafeMYShutter | 2 | sdef | 0 | 0 | 2 | 2 |
| 2P05VAVL | SecP5BusVA | 0 | off | -.5 | -.25 | 1 | 1.5 |
| 2P05VAVL | SecP5BusVA | 1 | idef | 4.0 | 4.5 | 5.25 | 5.5 |
| 2P05VAVL | SecP5BusVA | 2 | sdef | 4.0 | 4.5 | 5.25 | 5.5 |
| 2P15VAVL | SecP15BusVA | 0 | off | -.5 | -.25 | 1 | 1.5 |
| 2P15VAVL | SecP15BusVA | 1 | idef | 13.00 | 14.00 | 16.00 | 17.00 |
| 2P15VAVL | SecP15BusVA | 2 | sdef | 13.00 | 14.00 | 16.00 | 17.00 |
| 2N15VAVL | SecM15BusVA | 0 | off | -1 | -.5 | .5 | 1 |
| 2N15VAVL | SecM15BusVA | 1 | idef | -17.00 | -16.00 | -14.00 | -13.00 |
| 2N15VAVL | SecM15BusVA | 2 | sdef | -17.00 | -16.00 | -14.00 | -13.00 |
| 2P24VAVL | SecP24BusVA | 0 | off | -.5 | -.25 | 1 | 1.5 |
| 2P24VAVL | SecP24BusVA | 1 | idef | 22.0 | 23.0 | 25.0 | 26.0 |
| 2P24VAVL | SecP24BusVA | 2 | sdef | 22.0 | 23.0 | 25.0 | 26.0 |

| | | | | | | | | |
|---|---|---|---|---|---|---|---|---|
| 2P05VBVL | | SecP5BusVB | 0 | off | -.5 | -.25 | 1 | 1.5 |
| 2P05VBVL | | SecP5BusVB | 1 | idef | -.5 | -.25 | 1 | 1.5 |
| 2P05VBVL | | SecP5BusVB | 2 | sdef | -.5 | -.25 | 1 | 1.5 |
| 2P15VBVL | | SecP15BusVB | 0 | off | -.5 | -.25 | 1 | 1.5 |
| 2P15VBVL | | SecP15BusVB | 1 | idef | -.5 | -.25 | 1 | 1.5 |
| 2P15VBVL | | SecP15BusVB | 2 | sdef | -.5 | -.25 | 1 | 1.5 |
| 2N15VBVL | | SecM15BusVB | 0 | off | -1 | -.5 | .5 | 1 |
| 2N15VBVL | | SecM15BusVB | 1 | idef | -1 | -.5 | .5 | 1 |
| 2N15VBVL | | SecM15BusVB | 2 | sdef | -1 | -.5 | .5 | 1 |
| 2P24VBVL | | SecP24BusVB | 0 | off | -.5 | -.25 | 1 | 1.5 |
| 2P24VBVL | | SecP24BusVB | 1 | idef | -.5 | -.25 | 1 | 1.5 |
| 2P24VBVL | | SecP24BusVB | 2 | sdef | -.5 | -.25 | 1 | 1.5 |
| 2PMT1T | T_Pmt1 | 0 | off | -37.5 | -35.5 | 45.5 | 47.5 | |
| 2PMT1T | T_Pmt1 | 1 | idef | -37.5 | -35.5 | 45.5 | 47.5 | |
| 2PMT1T | T_Pmt1 | 2 | sdef | -37.5 | -35.5 | 45.5 | 47.5 | |
| 2PMT2T | T_Pmt2 | 0 | off | -37.5 | -35.5 | 45.5 | 47.5 | |
| 2PMT2T | T_Pmt2 | 1 | idef | -37.5 | -35.5 | 45.5 | 47.5 | |
| 2PMT2T | T_Pmt2 | 2 | sdef | -37.5 | -35.5 | 45.5 | 47.5 | |
| 2DTSTATT | | T_OutDet1 | 0 | off | -15 | -13 | 35.5 | 37.5 |
| 2DTSTATT | | T_OutDet1 | 1 | idef | -15 | -13 | 35.5 | 37.5 |
| 2DTSTATT | | T_OutDet1 | 2 | sdef | -15 | -13 | 35.5 | 37.5 |
| 2DCENTRT | | T_OutDet2 | 0 | off | -12.5 | -10.5 | 35.5 | 37.5 |
| 2DCENTRT | | T_OutDet2 | 1 | idef | -12.5 | -10.5 | 35.5 | 37.5 |
| 2DCENTRT | | T_OutDet2 | 2 | sdef | -12.5 | -10.5 | 35.5 | 37.5 |
| 2CHTRPZT | | T_CEABox | 0 | off | -37.5 | -35.5 | 35.5 | 37.5 |
| 2CHTRPZT | | T_CEABox | 1 | idef | -37.5 | -35.5 | 35.5 | 37.5 |
| 2CHTRPZT | | T_CEABox | 2 | sdef | -37.5 | -35.5 | 35.5 | 37.5 |
| 2FRADPYT | | T_PY | 0 | off | -40 | -38 | 35.5 | 37.5 |
| 2FRADPYT | | T_PY | 1 | idef | -40 | -38 | 35.5 | 37.5 |
| 2FRADPYT | | T_PY | 2 | sdef | -40 | -38 | 35.5 | 37.5 |
| 2CEAHVPT | | T_MY | 0 | off | -37.5 | -35.5 | 45.5 | 47.5 |
| 2CEAHVPT | | T_MY | 1 | idef | -37.5 | -35.5 | 45.5 | 47.5 |
| 2CEAHVPT | | T_MY | 2 | sdef | -37.5 | -35.5 | 45.5 | 47.5 |
| 2CONDMXT | | T_Conduit | 0 | off | -37.5 | -35.5 | 45.5 | 47.5 |
| 2CONDMXT | | T_Conduit | 1 | idef | -37.5 | -35.5 | 45.5 | 47.5 |
| 2CONDMXT | | T_Conduit | 2 | sdef | -37.5 | -35.5 | 45.5 | 47.5 |
| 2UVLSPXT | | T_Snout | 0 | off | -47.5 | -45.5 | 45.5 | 47.5 |
| 2UVLSPXT | | T_Snout | 1 | idef | -47.5 | -45.5 | 45.5 | 47.5 |
| 2UVLSPXT | | T_Snout | 2 | sdef | -47.5 | -45.5 | 45.5 | 47.5 |

Smithsonian Astrophysical Observatory
High Energy Astrophysics Division

# Alarmed Telemetry Values in the HRC EGSE

| | |
|---|---|
| **Project** | HRC |
| **Document ID** | |
| **Revision ID** | *Revision* |
| **Prepared By** | jhc |
| **Reviewed By** | |
| **File** | alarms.tex |

## Contents

1 HRC OFF ALARM STATE 2

2 IMAGER ALARM STATE 3

3 SPECTROSCOPIC ALARM STATE 6

# 1 HRC OFF ALARM STATE

Table 1: hrc_off.alarm

| HRCMSID | MSID | STATUS | RL | YL | YU | RU |
|---|---|---|---|---|---|---|
| — | — | — | – | – | – | – |
| S_BusSelCeaALvps | 2C1LVBS | 1 | -1 | -1 | 1 | 1 |
| S_BusSelCeaBLvps | 2C2LVBS | 1 | 0 | 0 | 2 | 2 |
| S_BusSelImgHvps | 2IMHVBS | 1 | -1 | -1 | 1 | 1 |
| S_BusSelSpecHvps | 2SPHVBS | 1 | -1 | -1 | 1 | 1 |
| S_BusSelShldAHvps | 2S1HVBS | 1 | -1 | -1 | 1 | 1 |
| S_BusSelShldBHvps | 2S2HVBS | 1 | -1 | -1 | 1 | 1 |
| S_ShldPmtSelPreampA | 2ELEASS | 1 | 0 | 0 | 2 | 2 |
| S_ShldPmtSelPreampB | 2ELEBSS | 1 | -1 | -1 | 1 | 1 |
| S_FailSafeMasterRelay | 2FSMRST | 1 | 0 | 0 | 2 | 2 |
| S_FailSafeCalSrcRelay | 2FSCAST | 1 | 0 | 0 | 2 | 2 |
| S_FailSafePYShutter | 2FSPYST | 1 | 0 | 0 | 2 | 2 |
| S_FailSafeMYShutter | 2FSNYST | 1 | 0 | 0 | 2 | 2 |
| S_P5LvpsA | 2PS5AON | 1 | -1 | -1 | 1 | 1 |
| SecP5BusVA | 2P05VAVL | 1 | -.5 | -.25 | 1 | 1.5 |
| SecP15BusVA | 2P15VAVL | 1 | -.5 | -.25 | 1 | 1.5 |
| SecM15BusVA | 2N15VAVL | 1 | -1 | -.5 | .5 | 1 |
| SecP24BusVA | 2P24VAVL | 1 | -.5 | -.25 | 1 | 1.5 |
| S_P5LvpsB | 2PS5BON | 1 | -1 | -1 | 1 | 1 |
| SecP5BusVB | 2P05VBVL | 1 | -.5 | -.25 | 1 | 1.5 |
| SecP15BusVB | 2P15VBVL | 1 | -.5 | -.25 | 1 | 1.5 |
| SecM15BusVB | 2N15VBVL | 1 | -1 | -.5 | .5 | 1 |
| SecP24BusVB | 2P24VBVL | 1 | -.5 | -.25 | 1 | 1.5 |
| S_PriDoorLSOpen | 2DRLSOP | 1 | -1 | 0 | 2 | 3 |
| S_PYShutterLSHome | 2PYLSHM | 1 | -1 | 0 | 2 | 3 |
| S_MYShutterLSHome | 2MYLSHM | 1 | -1 | 0 | 2 | 3 |
| S_CalSrcPriLSHome | 2CSLSHM | 1 | -1 | 0 | 2 | 3 |
| T_Pmt1 | 2PMT1T | 1 | -37.5 | -35.5 | 45.5 | 47.5 |
| T_Pmt2 | 2PMT2T | 1 | -37.5 | -35.5 | 45.5 | 47.5 |
| T_OutDet1 | 2DTSTATT | 1 | -15 | -13 | 35.5 | 37.5 |
| T_OutDet2 | 2DCENTRT | 1 | -12.5 | -10.5 | 35.5 | 37.5 |
| T_FEABox | 2FHTRMZT | 1 | -37.5 | -35.5 | 35.5 | 37.5 |
| T_CEABox | 2CHTRPZT | 1 | -37.5 | -35.5 | 35.5 | 37.5 |
| T_PY | 2FRADPYT | 1 | -40 | -38 | 35.5 | 37.5 |
| T_MY | 2CEAHVPT | 1 | -37.5 | -35.5 | 45.5 | 47.5 |
| T_Conduit | 2CONDMXT | 1 | -37.5 | -35.5 | 45.5 | 47.5 |
| T_Snout | 2UVLSPXT | 1 | -47.5 | -45.5 | 45.5 | 47.5 |

# 2 IMAGER ALARM STATE

Table 2: Idef.alarm

| HRCMSID | MSID | STATUS | RL | YL | YU | RU |
|---|---|---|---|---|---|---|
| — | — | — | – | – | – | – |
| | 1 | 0 | 0 | 0 | 0 | |
| S_BusSelCeaALvps | 2C1LVBS | 1 | -1 | -1 | 1 | 1 |
| S_BusSelCeaBLvps | 2C2LVBS | 1 | 0 | 0 | 2 | 2 |
| S_BusSelImgHvps | 2IMHVBS | 1 | -1 | -1 | 1 | 1 |
| S_BusSelSpecHvps | 2SPHVBS | 1 | -1 | -1 | 1 | 1 |
| S_BusSelShldAHvps | 2S1HVBS | 1 | -1 | -1 | 1 | 1 |
| S_BusSelShldBHvps | 2S2HVBS | 1 | -1 | -1 | 1 | 1 |
| S_ShldPmtSelPreampA | 2ELEASS | 1 | 0 | 0 | 2 | 2 |
| S_ShldPmtSelPreampB | 2ELEBSS | 1 | -1 | -1 | 1 | 1 |
| S_DetSelPreampA | 2PREADS | 1 | -1 | -1 | 1 | 1 |
| S_DetSelPreampB | 2PREBDS | 1 | 0 | 0 | 2 | 2 |
| S_FailSafeMasterRelay | 2FSMRST | 1 | 0 | 0 | 2 | 2 |
| S_FailSafeCalSrcRelay | 2FSCAST | 1 | 0 | 0 | 2 | 2 |
| S_FailSafePYShutter | 2FSPYST | 1 | 0 | 0 | 2 | 2 |
| S_FailSafeMYShutter | 2FSNYST | 1 | 0 | 0 | 2 | 2 |
| S_P5LvpsA | 2PS5AON | 1 | 0 | 0 | 2 | 2 |
| SecP5BusVA | 2P05VAVL | 1 | 4.0 | 4.5 | 5.25 | 5.5 |
| SecP15BusVA | 2P15VAVL | 1 | 13.00 | 14.00 | 16.00 | 17.00 |
| SecM15BusVA | 2N15VAVL | 1 | -17.00 | -16.00 | -14.00 | -13.00 |
| SecP24BusVA | 2P24VAVL | 1 | 22.0 | 23.0 | 25.0 | 26.0 |
| S_P5LvpsB | 2PS5BON | 1 | -1 | -1 | 1 | 1 |
| SecP5BusVB | 2P05VBVL | 1 | -.5 | -.25 | 1 | 1.5 |
| SecP15BusVB | 2P15VBVL | 1 | -.5 | -.25 | 1 | 1.5 |
| SecM15BusVB | 2N15VBVL | 1 | -1 | -.5 | .5 | 1 |
| SecP24BusVB | 2P24VBVL | 1 | -.5 | -.25 | 1 | 1.5 |
| S_LvpsP24 | 224PCAST | 1 | 0 | 0 | 2 | 2 |
| S_LvpsP15 | 215PCAST | 1 | 0 | 0 | 2 | 2 |
| S_LvpsM15 | 215NCAST | 1 | -1 | -1 | 2 | 2 |
| P5BusMon | 2C05PALV | 1 | 4.5 | 4.8 | 5.2 | 5.5 |
| P15BusMon | 2C15PALV | 1 | 13.0 | 14.5 | 15.5 | 17 |
| M15BusMon | 2C15NALV | 1 | -17.0 | -15.5 | -14.5 | -13.0 |
| P24BusMon | 2C24PALV | 1 | 22 | 23.5 | 24.5 | 26 |
| PrimBusI | 2PRBSCR | 1 | 140 | 145 | 155 | 160 |
| PrimBusV | 2PRBSVL | 1 | 22 | 23 | 34 | 35 |
| S_ImHvps | 2IMONST | 1 | -1 | -1 | 1 | 2 |
| S_ImHvpsCurLim | 2IMCLST | 1 | -1 | 0 | 2 | 3 |
| V_ImTopHV | 2IMHBLV | 1 | 85 | 86 | 128 | 128 |
| V_ImBotHV | 2IMHVLV | 1 | 78 | 79 | 128 | 128 |
| V_ImTopHVStep | 2IMTPAST | 1 | -1 | -1 | 79 | 80 |
| V_ImBotHVStep | 2IMBPAST | 1 | -1 | -1 | 91 | 92 |
| S_SpHvps | 2SPONST | 1 | -1 | -1 | 1 | 1 |

Table 2: Idef.alarm

| HRCMSID | MSID | STATUS | RL | YL | YU | RU |
|---|---|---|---|---|---|---|
| S_SpHvpsCurLim | 2SPCLST | 1 | 0 | 0 | 2 | 3 |
| V_SpTopHV | 2SPHBLV | 1 | 126 | 126 | 128 | 128 |
| V_SpBotHV | 2SPHVLV | 1 | 126 | 126 | 128 | 128 |
| V_SpTopHVStep | 2SPTPAST | 1 | -1 | -1 | 1 | 1 |
| V_SpBotHVStep | 2SPBPAST | 1 | -1 | -1 | 1 | 1 |
| S_ShldA | 2S1ONST | 1 | -1 | -1 | 1 | 2 |
| V_ShldAHV | 2S1HVLV | 1 | 79 | 80 | 128 | 128 |
| V_ShldAHVStep | 2S1HVST | 1 | -2 | -1 | 12 | 13 |
| S_ShldB | 2S2ONST | 1 | -1 | -1 | 1 | 1 |
| V_ShldBHV | 2S2HVLV | 1 | 126 | 126 | 128 | 128 |
| V_ShldBHVStep | 2S2HVST | 1 | -1 | -1 | 1 | 1 |
| S_PriDoorLSOpen | 2DRLSOP | 1 | -1 | 0 | 2 | 3 |
| S_PYShutterLSHome | 2PYLSHM | 1 | -1 | 0 | 2 | 3 |
| S_MYShutterLSHome | 2MYLSHM | 1 | -1 | 0 | 2 | 3 |
| S_CalSrcPriLSHome | 2CSLSHM | 1 | -1 | 0 | 2 | 3 |
| R_tevt1 | 2TLEV1RT | 1 | -1 | -1 | 50 | 100 |
| R_tevt2 | 2TLEV2RT | 1 | -1 | -1 | 50 | 100 |
| R_vevt1 | 2VLEV1RT | 1 | -1 | -1 | 50 | 100 |
| R_vevt2 | 2VLEV2RT | 1 | -1 | -1 | 50 | 100 |
| R_shield1 | 2SHEV1RT | 1 | -1 | -1 | 150 | 200 |
| R_shield2 | 2SHEV2RT | 1 | -1 | -1 | 150 | 200 |
| T_Pmt1 | 2PMT1T | 1 | -37.5 | -35.5 | 45.5 | 47.5 |
| T_Pmt2 | 2PMT2T | 1 | -37.5 | -35.5 | 45.5 | 47.5 |
| T_OutDet1 | 2DTSTATT | 1 | -15 | -13 | 35.5 | 37.5 |
| T_OutDet2 | 2DCENTRT | 1 | -12.5 | -10.5 | 35.5 | 37.5 |
| T_FEABox | 2FHTRMZT | 1 | -37.5 | -35.5 | 35.5 | 37.5 |
| T_CEABox | 2CHTRPZT | 1 | -37.5 | -35.5 | 35.5 | 37.5 |
| T_PY | 2FRADPYT | 1 | -40 | -38 | 35.5 | 37.5 |
| T_MY | 2CEAHVPT | 1 | -37.5 | -35.5 | 45.5 | 47.5 |
| T_Conduit | 2CONDMXT | 1 | -37.5 | -35.5 | 45.5 | 47.5 |
| T_Snout | 2UVLSPXT | 1 | -47.5 | -45.5 | 45.5 | 47.5 |
| T_FePreAmp | 2FEPRATM | 1 | -35 | -32 | 50 | 55 |
| T_Spec | 2SPINATM | 1 | -15 | -12 | 35 | 40 |
| T_Img | 2IMINATM | 1 | -15 | -12 | 35 | 40 |
| T_Lvps | 2LVPLATM | 1 | -35 | -32 | 50 | 55 |
| T_SpHvps | 2SPHVATM | 1 | -35 | -32 | 50 | 55 |
| T_ImHvps | 2IMHVATM | 1 | -35 | -32 | 50 | 55 |
| T_Motor | 2SMTRATM | 1 | -20 | -17 | 45 | 50 |
| T_FEA | 2FE00ATM | 1 | -35 | -32 | 45 | 50 |
| T_CEA0 | 2CE00ATM | 1 | -35 | -32 | 45 | 50 |
| T_CEA1 | 2CE01ATM | 1 | -35 | -32 | 45 | 50 |
| ForcedCpU | 2FCPUAST | 1 | -1 | -1 | 1 | 1 |
| ForcedCpV | 2FCPVAST | 1 | -1 | -1 | 1 | 1 |
| CenterBlankHiCpU | 2CBHUAST | 1 | 254 | 254 | 256 | 256 |
| CenterBlankLoCpU | 2CBLUAST | 1 | -1 | -1 | 1 | 1 |

Table 2: Idef.alarm

| HRCMSID | MSID | STATUS | RL | YL | YU | RU |
|---|---|---|---|---|---|---|
| CenterBlankHiCpV | 2CBHVAST | 1 | 254 | 254 | 256 | 256 |
| CenterBlankLoCpV | 2CBLVAST | 1 | -1 | -1 | 1 | 1 |
| WidthThreshold | 2WDTHAST | 1 | 2 | 2 | 4 | 4 |
| CalModeEnable | 2CLMDAST | 1 | -1 | -1 | 1 | 1 |
| S_InstSelect | 2SPMDASL | 1 | 0 | 0 | 2 | 2 |
| DataFifoEnable | 2FIFOAVR | 1 | 0 | 0 | 2 | 2 |
| EdgeBlkValidityEnable | 2EBLKAVR | 1 | -1 | -1 | 1 | 1 |
| CtrBlkValidityEnable | 2CBLKAVR | 1 | -1 | -1 | 1 | 1 |
| ULDValidityEnable | 2ULDIAVR | 1 | -1 | -1 | 1 | 1 |
| WidValidityEnable | 2WDTHAVR | 1 | -1 | -1 | 1 | 1 |
| ShldValidityEnable | 2SHLDAVR | 1 | -1 | -1 | 1 | 1 |
| ULD | 2ULDIALV | 1 | 254 | 254 | 256 | 256 |
| LLD | 2LLDIALV | 1 | 130 | 130 | 132 | 132 |
| CalPulserSetting | 2CALPALV | 1 | 126 | 126 | 128 | 128 |
| GridBias | 2GRDVALV | 1 | 140 | 140 | 142 | 142 |
| RangeSwSetting | 2RSRFALV | 1 | 172 | 172 | 174 | 174 |

# 3 SPECTROSCOPIC ALARM STATE

Table 3: Sdef.alarm

| HRCMSID | MSID | STATUS | RL | YL | YU | RU |
|---|---|---|---|---|---|---|
| — | — | — | – | – | – | – |
| | 1 | 0 | 0 | 0 | 0 | |
| S_BusSelCeaALvps | 2C1LVBS | 1 | -1 | -1 | 1 | 1 |
| S_BusSelCeaBLvps | 2C2LVBS | 1 | 0 | 0 | 2 | 2 |
| S_BusSelImgHvps | 2IMHVBS | 1 | -1 | -1 | 1 | 1 |
| S_BusSelSpecHvps | 2SPHVBS | 1 | -1 | -1 | 1 | 1 |
| S_BusSelShldAHvps | 2S1HVBS | 1 | -1 | -1 | 1 | 1 |
| S_BusSelShldBHvps | 2S2HVBS | 1 | -1 | -1 | 1 | 1 |
| S_ShldPmtSelPreampA | 2ELEASS | 1 | 0 | 0 | 2 | 2 |
| S_ShldPmtSelPreampB | 2ELEBSS | 1 | -1 | -1 | 1 | 1 |
| S_DetSelPreampA | 2PREADS | 1 | 0 | 0 | 2 | 2 |
| S_DetSelPreampB | 2PREBDS | 1 | -1 | -1 | 1 | 1 |
| S_FailSafeMasterRelay | 2FSMRST | 1 | 0 | 0 | 2 | 2 |
| S_FailSafeCalSrcRelay | 2FSCAST | 1 | 0 | 0 | 2 | 2 |
| S_FailSafePYShutter | 2FSPYST | 1 | 0 | 0 | 2 | 2 |
| S_FailSafeMYShutter | 2FSNYST | 1 | 0 | 0 | 2 | 2 |
| S_P5LvpsA | 2PS5AON | 1 | 0 | 0 | 2 | 2 |
| SecP5BusVA | 2P05VAVL | 1 | 4.0 | 4.5 | 5.25 | 5.5 |
| SecP15BusVA | 2P15VAVL | 1 | 13.00 | 14.00 | 16.00 | 17.00 |
| SecM15BusVA | 2N15VAVL | 1 | -17.00 | -16.00 | -14.00 | -13.00 |
| SecP24BusVA | 2P24VAVL | 1 | 22.0 | 23.0 | 25.0 | 26.0 |
| S_P5LvpsB | 2PS5BON | 1 | -1 | -1 | 1 | 1 |
| SecP5BusVB | 2P05VBVL | 1 | -.5 | -.25 | 1 | 1.5 |
| SecP15BusVB | 2P15VBVL | 1 | -.5 | -.25 | 1 | 1.5 |
| SecM15BusVB | 2N15VBVL | 1 | -1 | -.5 | .5 | 1 |
| SecP24BusVB | 2P24VBVL | 1 | -.5 | -.25 | 1 | 1.5 |
| S_LvpsP24 | 224PCAST | 1 | 0 | 0 | 2 | 2 |
| S_LvpsP15 | 215PCAST | 1 | 0 | 0 | 2 | 2 |
| S_LvpsM15 | 215NCAST | 1 | -1 | -1 | 2 | 2 |
| P5BusMon | 2C05PALV | 1 | 4.5 | 4.8 | 5.2 | 5.5 |
| P15BusMon | 2C15PALV | 1 | 13.0 | 14.5 | 15.5 | 17 |
| M15BusMon | 2C15NALV | 1 | -17.0 | -15.5 | -14.5 | -13.0 |
| P24BusMon | 2C24PALV | 1 | 22 | 23.5 | 24.5 | 26 |
| PrimBusI | 2PRBSCR | 1 | 140 | 145 | 155 | 160 |
| PrimBusV | 2PRBSVL | 1 | 22 | 23 | 34 | 35 |
| S_ImHvps | 2IMONST | 1 | -1 | -1 | 1 | 1 |
| S_ImHvpsCurLim | 2IMCLST | 1 | 0 | 0 | 2 | 3 |
| V_ImTopHV | 2IMHBLV | 1 | 126 | 126 | 128 | 128 |
| V_ImBotHV | 2IMHVLV | 1 | 126 | 126 | 128 | 128 |
| V_ImTopHVStep | 2IMTPAST | 1 | -1 | -1 | 1 | 1 |
| V_ImBotHVStep | 2IMBPAST | 1 | -1 | -1 | 1 | 1 |
| S_SpHvps | 2SPONST | 1 | -1 | -1 | 1 | 2 |

Table 3: Sdef.alarm

| HRCMSID | MSID | STATUS | RL | YL | YU | RU |
|---|---|---|---|---|---|---|
| S_SpHvpsCurLim | 2SPCLST | 1 | -1 | 0 | 2 | 3 |
| V_SpTopHV | 2SPHBLV | 1 | 79 | 80 | 128 | 128 |
| V_SpBotHV | 2SPHVLV | 1 | 72 | 73 | 128 | 128 |
| V_SpTopHVStep | 2SPTPAST | 1 | -1 | -1 | 90 | 91 |
| V_SpBotHVStep | 2SPBPAST | 1 | -1 | -1 | 102 | 103 |
| S_ShldA | 2S1ONST | 1 | -1 | -1 | 1 | 2 |
| V_ShldAHV | 2S1HVLV | 1 | 79 | 80 | 128 | 128 |
| V_ShldAHVStep | 2S1HVST | 1 | -2 | -1 | 12 | 13 |
| S_ShldB | 2S2ONST | 1 | -1 | -1 | 1 | 1 |
| V_ShldBHV | 2S2HVLV | 1 | 126 | 126 | 128 | 128 |
| V_ShldBHVStep | 2S2HVST | 1 | -1 | -1 | 1 | 1 |
| S_PriDoorLSOpen | 2DRLSOP | 1 | -1 | 0 | 2 | 3 |
| S_PYShutterLSHome | 2PYLSHM | 1 | -1 | 0 | 2 | 3 |
| S_MYShutterLSHome | 2MYLSHM | 1 | -1 | 0 | 2 | 3 |
| S_CalSrcPriLSHome | 2CSLSHM | 1 | -1 | 0 | 2 | 3 |
| R_tevt1 | 2TLEV1RT | 1 | -1 | -1 | 50 | 100 |
| R_tevt2 | 2TLEV2RT | 1 | -1 | -1 | 50 | 100 |
| R_vevt1 | 2VLEV1RT | 1 | -1 | -1 | 50 | 100 |
| R_vevt2 | 2VLEV2RT | 1 | -1 | -1 | 50 | 100 |
| R_shield1 | 2SHEV1RT | 1 | -1 | -1 | 150 | 200 |
| R_shield2 | 2SHEV2RT | 1 | -1 | -1 | 150 | 200 |
| T_Pmt1 | 2PMT1T | 1 | -37.5 | -35.5 | 45.5 | 47.5 |
| T_Pmt2 | 2PMT2T | 1 | -37.5 | -35.5 | 45.5 | 47.5 |
| T_OutDet1 | 2DTSTATT | 1 | -15 | -13 | 35.5 | 37.5 |
| T_OutDet2 | 2DCENTRT | 1 | -12.5 | -10.5 | 35.5 | 37.5 |
| T_FEABox | 2FHTRMZT | 1 | -37.5 | -35.5 | 35.5 | 37.5 |
| T_CEABox | 2CHTRPZT | 1 | -37.5 | -35.5 | 35.5 | 37.5 |
| T_PY | 2FRADPYT | 1 | -40 | -38 | 35.5 | 37.5 |
| T_MY | 2CEAHVPT | 1 | -37.5 | -35.5 | 45.5 | 47.5 |
| T_Conduit | 2CONDMXT | 1 | -37.5 | -35.5 | 45.5 | 47.5 |
| T_Snout | 2UVLSPXT | 1 | -47.5 | -45.5 | 45.5 | 47.5 |
| T_FePreAmp | 2FEPRATM | 1 | -35 | -32 | 50 | 55 |
| T_Spec | 2SPINATM | 1 | -15 | -12 | 35 | 40 |
| T_Img | 2IMINATM | 1 | -15 | -12 | 35 | 40 |
| T_Lvps | 2LVPLATM | 1 | -35 | -32 | 50 | 55 |
| T_SpHvps | 2SPHVATM | 1 | -35 | -32 | 50 | 55 |
| T_ImHvps | 2IMHVATM | 1 | -35 | -32 | 50 | 55 |
| T_Motor | 2SMTRATM | 1 | -20 | -17 | 45 | 50 |
| T_FEA | 2FE00ATM | 1 | -35 | -32 | 45 | 50 |
| T_CEA0 | 2CE00ATM | 1 | -35 | -32 | 45 | 50 |
| T_CEA1 | 2CE01ATM | 1 | -35 | -32 | 45 | 50 |
| ForcedCpU | 2FCPUAST | 1 | -1 | -1 | 1 | 1 |
| ForcedCpV | 2FCPVAST | 1 | -1 | -1 | 1 | 1 |
| CenterBlankHiCpU | 2CBHUAST | 1 | 254 | 254 | 256 | 256 |
| CenterBlankLoCpU | 2CBLUAST | 1 | -1 | -1 | 1 | 1 |

Table 3: Sdef.alarm

| HRCMSID | MSID | STATUS | RL | YL | YU | RU |
|---|---|---|---|---|---|---|
| CenterBlankHiCpV | 2CBHVAST | 1 | 254 | 254 | 256 | 256 |
| CenterBlankLoCpV | 2CBLVAST | 1 | -1 | -1 | 1 | 1 |
| WidthThreshold | 2WDTHAST | 1 | 2 | 2 | 4 | 4 |
| CalModeEnable | 2CLMDAST | 1 | -1 | -1 | 1 | 1 |
| S_InstSelect | 2SPMDASL | 1 | 0 | 0 | 2 | 2 |
| DataFifoEnable | 2FIFOAVR | 1 | 0 | 0 | 2 | 2 |
| EdgeBlkValidityEnable | 2EBLKAVR | 1 | -1 | -1 | 1 | 1 |
| CtrBlkValidityEnable | 2CBLKAVR | 1 | -1 | -1 | 1 | 1 |
| ULDValidityEnable | 2ULDIAVR | 1 | -1 | -1 | 1 | 1 |
| WidValidityEnable | 2WDTHAVR | 1 | -1 | -1 | 1 | 1 |
| ShldValidityEnable | 2SHLDAVR | 1 | -1 | -1 | 1 | 1 |
| ULD | 2ULDIALV | 1 | 254 | 254 | 256 | 256 |
| LLD | 2LLDIALV | 1 | 130 | 130 | 132 | 132 |
| CalPulserSetting | 2CALPALV | 1 | 126 | 126 | 128 | 128 |
| GridBias | 2GRDVALV | 1 | 140 | 140 | 142 | 142 |
| RangeSwSetting | 2RSRFALV | 1 | 172 | 172 | 174 | 174 |

Organization:


**Smithsonian Astrophysical Observatory**

60 Garden St.
Cambridge MA, 02310


Program/Project:

**Chandra**

**High Resolution Camera**

Title:

# CHAPTER

# HRC RCTU IF

| | | | |
|---|---|---|---|
| **Project** | HRC | **Start Date:Time:** | |
| **Document Type** | Scanned Document | **End Date:Time:** | |
| **File** | hrc.poc.proc.ops.tex | **Test Conductor:** | |
| **Revision** | *Rev* | | |
| **Prepared By** | | | |
| **Make Date** | January 17, 2013 | | |

Document Configuration Management Information:

| REVISIONS | | | | |
|---|---|---|---|---|
| ZONE | LTR. | DESCRIPTION | DATE | APPROVED |
| | F | REVISED PER ECO #21213 | 20FEB97 | |

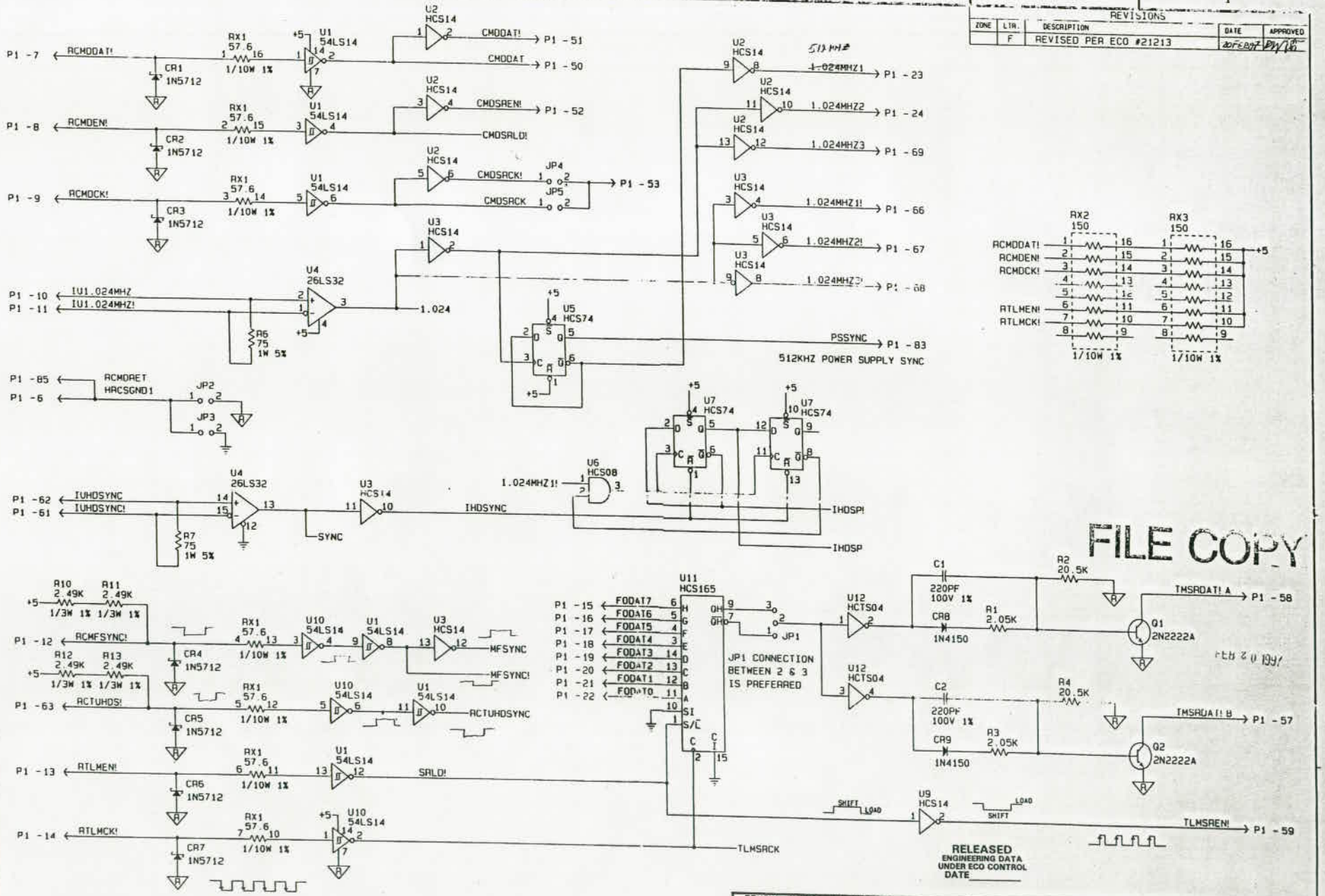


NOTES:
1. UNLESS OTHERWISE SPECIFIED:
ALL RESISTOR VALUES ARE IN OHMS, 1/8W +/-1%.
ALL CAPACITOR VALUES ARE IN uF, 50V, +/-5%.

| | | |
|---|---|---|
| REMOVE BURRS AND BREAK SHARP EDGES UNLESS OTHERWISE SPECIFIED DIMENSIONS ARE IN INCHES | DRN RBCook DATE 06/20/95 CHK A.DEPAVAO DATE 06/23/95 | SMITHSONIAN ASTROPHYSICAL OBSERVATORY CENTRAL ENGINEERING CAMBRIDGE MA |
| TOLERANCES ON FRACTIONS ± DECIMALS .XX ± .XXX ± ANGLES ± | DSGN APPD DATE | SCHEMATIC, FLT INTERFACE |
| MACH. FIN: N/A | DSGN APPD DATE | C CODE IDENT NO. 50944 DWG NO. HRC-5214 REV F |
| FIN: N/A MATL: N/A | ENGR APPD DATE E.A.JOHNSTON 06/23/95 | SCALE NONE SCHEMA V3.34 SHEET 1 OF 4 |
| NEXT ASSY: HRC-OV5264 | PROJ APPD DATE E.J. for J.GOMES 06/23/95 | |
| | CH W.DAIGLE 06/23/95 | |

CMOS

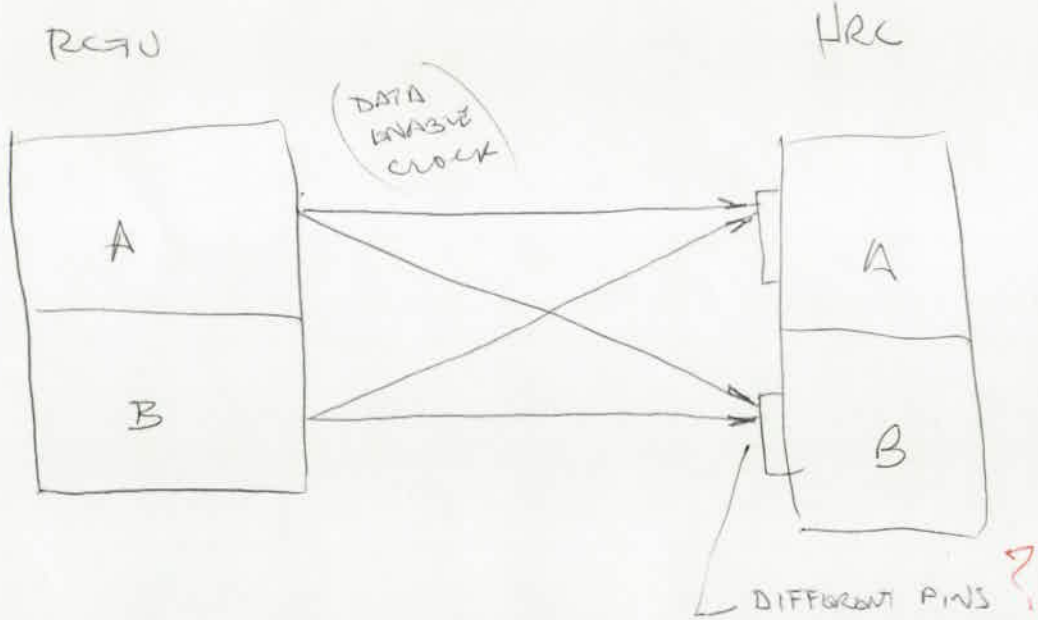


TLM

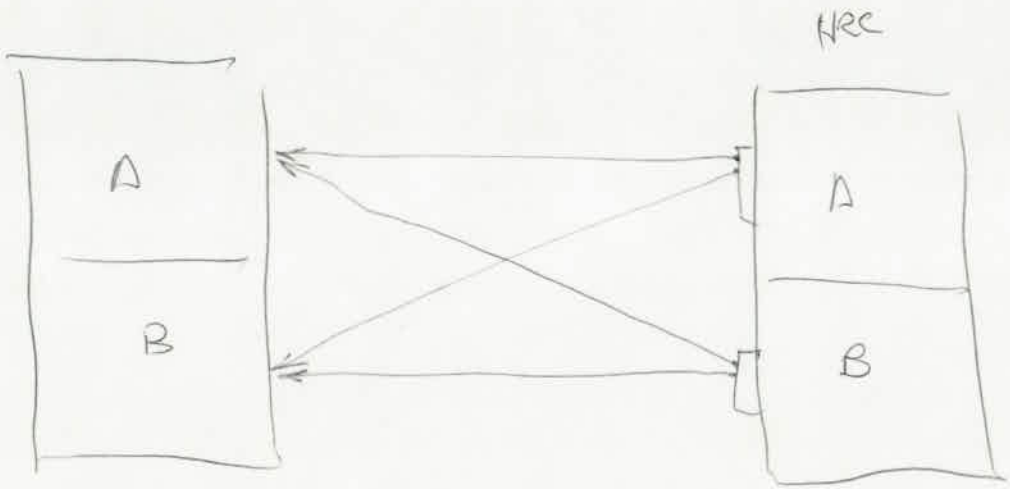


* CHECK CONN I/D'S & PIN #S

Organization:


**Smithsonian Astrophysical Observatory**

60 Garden St.
Cambridge MA, 02310


Program/Project:

**Chandra**

**High Resolution Camera**

Title:

**CHAPTER**

# HRC Power Config

| | | | |
|---|---|---|---|
| **Project** | HRC | **Start Date:Time:** | |
| **Document Type** | Scanned Document | **End Date:Time:** | |
| **File** | hrc.poc.proc.ops.tex | **Test Conductor:** | |
| **Revision** | *Rev* | | |
| **Prepared By** | | | |
| **Make Date** | January 17, 2013 | | |

Document Configuration Management Information:

## PCFG00

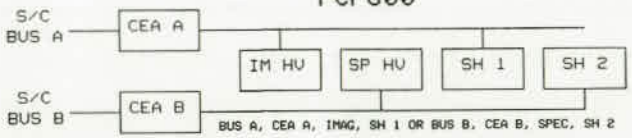


CEA A - A
CEA B - B
IMAG - A
SPEC - B
SH 1 - A
SH 2 - B

## PCFG01

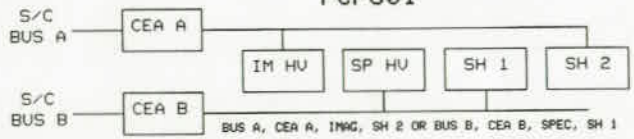


CEA A - A
CEA B - B
IMAG - A
SPEC - B
SH 1 - B
SH 2 - A

## PCFG02

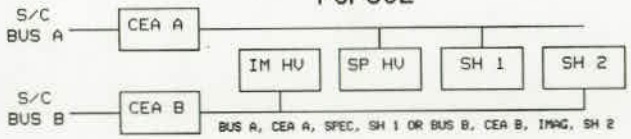


CEA A - A
CEA B - B
IMAG - B
SPEC - A
SH 1 - A
SH 2 - B

## PCFG03

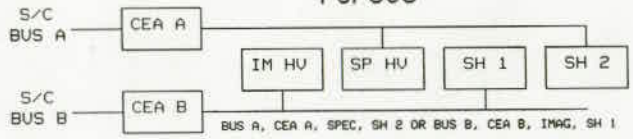


CEA A - A
CEA B - B
IMAG - B
SPEC - A
SH 1 - B
SH 2 - A

## PCFG04

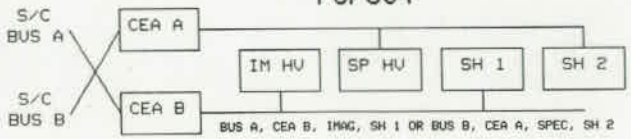


CEA A - B
CEA B - A
IMAG - B
SPEC - A
SH 1 - B
SH 2 - A

## PCFG05

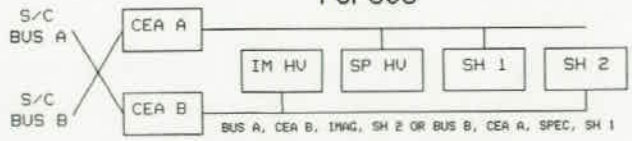


CEA A - B
CEA B - A
IMAG - B
SPEC - A
SH 1 - A
SH 2 - B

## PCFG06

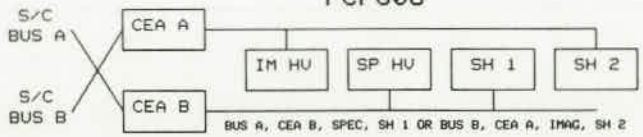


CEA A - B
CEA B - A
IMAG - A
SPEC - B
SH 1 - B
SH 2 - A

## PCFG07

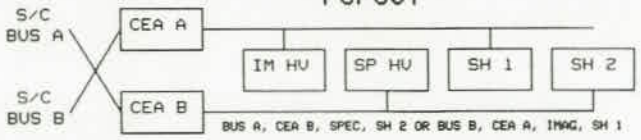


CEA A - B
CEA B - A
IMAG - A
SPEC - B
SH 1 - A
SH 2 - B

## PCFG08

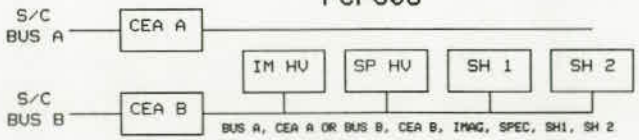


CEA A - A
CEA B - B
IMAG - B
SPEC - B
SH 1 - B
SH 2 - B

## PCFG09

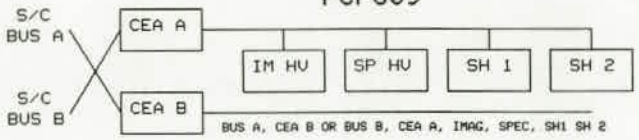


CEA A - B
CEA B - A
IMAG - A
SPEC - A
SH 1 - A
SH 2 - A

## PCFG10

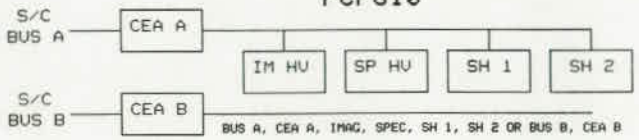


CEA A - A
CEA B - B
IMAG - A
SPEC - A
SH 1 - A
SH 2 - A

## PCFG11

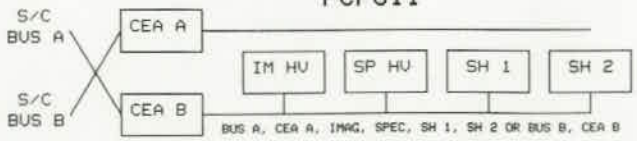


CEA A - B
CEA B - A
IMAG - B
SPEC - B
SH 1 - B
SH 2 - B

REV A 2/19/97
REV B 9/9/97
REV C 11/5/98

# HRC POWER CONFIGURATION DIAGRAM

PCFG.PUC

06/08/98 20:44:13

| REVISIONS | | | | |
|---|---|---|---|---|
| SYMB | LTR | DESCRIPTION | DATE | APPROVED |
| | | | | |

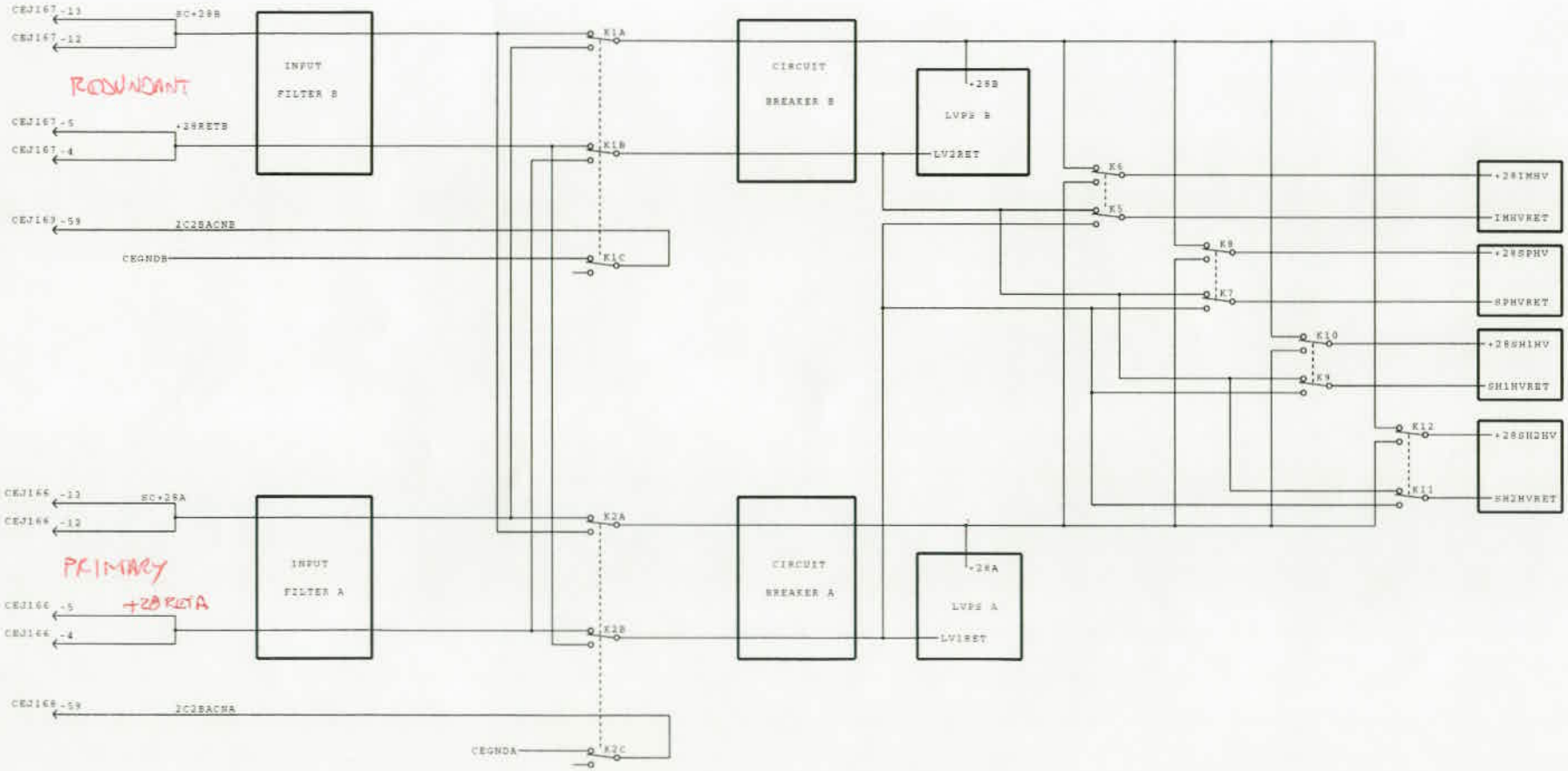


| | | |
|---|---|---|
| REMOVE BURRS AND BREAK SHARP EDGES | DR DATE | CHK DATE |
| UNLESS OTHERWISE SPECIFIED DIMENSIONS ARE IN INCHES | DRAW APPR DATE | |
| TOLERANCES ON | DESIGN APPR DATE | |
| | ENGR APPR DATE | |
| MATL FIN. | PROJ APPR DATE | |
| FIN: MATL: | CONTRACT | |
| NEXT ASSY. | | |

SMITHSONIAN ASTROPHYSICAL OBSERVATORY
CENTRAL ENGINEERING CAMBRIDGE MA

28V POWER SWITCHING

| | | | |
|---|---|---|---|
| C | CAGE CODE NO. 50944 | DWG NO. HRCPHRSM | REV |
| SCALE | | SHEET 1 OF 1 | |

# Interoffice Correspondence

TRW Space & Electronics Group

| Subject | Date | From |
|---|---|---|
| HRC Power Bus Commands | 13-Feb-98<br>AXAF.98.341.015 | Brad Loveman |
| **To** | **cc** | **Location/Phone** |
| Pat Anderson | Distribution | R7A/2100<br>(310)8135418 |

The HRC power bus commands (on/off) will be sent from the STC/TC console during testing. During HRC testing, the science team will make several requests to the TC to turn on and off the bus.

The HRC will be damaged if both busses are **ON** at the same time. The commands to power **ON** the HRC bus are on the critical command list.

HRC POWER ON: (critical commands)

CMD **EHRCPPON** (HRC POWER ON, PRIMARY BUS)

CMD **EHRCRPON** (HRC POWER ON, REDUNDANT BUS)

HRC POWER OFF:

CMD **EHRCPPOF** (HRC POWER OFF, PRIMARY BUS)

CMD **EHRCRPOF** (HRC POWER OFF, REDUNDANT BUS)

TELEMETRY:

**EHRCPPWR**= ON/OFF (ON will be a yellow alarm)

**EHRCRPWR**=ON/OFF (ON will be a yellow alarm)

Please post this at the TC console so that in an energency (both busses on), the commands for HRC OFF are readily available.

MEMORANDUM

TO: Scott Texter

FROM: G. K. Austin GA

DATE: May 11, 1998

SUBJECT: Turn-on of HRC Power Busses

The following bilevel telemetry values **MUST** be verified prior to turning on either the HRC primary or redundant power busses:

| **Mnemonic** | **State** |
|---|---|
| 2PS5AON | 0 = OFF |
| 2PS5BON | 0 = OFF |
| 2FSMRST | 1 = DIS |
| 2FSCAST | 1 = DIS |
| 2FSPYST | 1 = DIS |
| 2FSNYST | 1 = DIS |

After this verification, either EHRCPPON or EHRCRPON may be sent to turn on the HRC primary or redundant buss respectively, but only one at a time.

If the verification fails due to an improper state, nothing further should be done until HRC personnel have been contacted (call G. Austin @ 617-719-8413). The HRC was in the proper state when it was turned off after OCC testing last Friday. Since the configuration is established by latching relays, any change in configuration should be understood before proceeding or making any attempt to correct the configuration.

cc: J. Gomes
S. Murray

| | | |
|---|---|---|
| 28 √ | 1.2 / 1.5 A | 33.6 / 42 |
| 35 √ | 0.7 / 1.3 A | 24.5 / 45.5 |
| 22 √ | 1.3 / 1.9 A | 28.6 / 41.8 |
| 32 √ | 0.9 / 1.4 A | 29 / 45 |

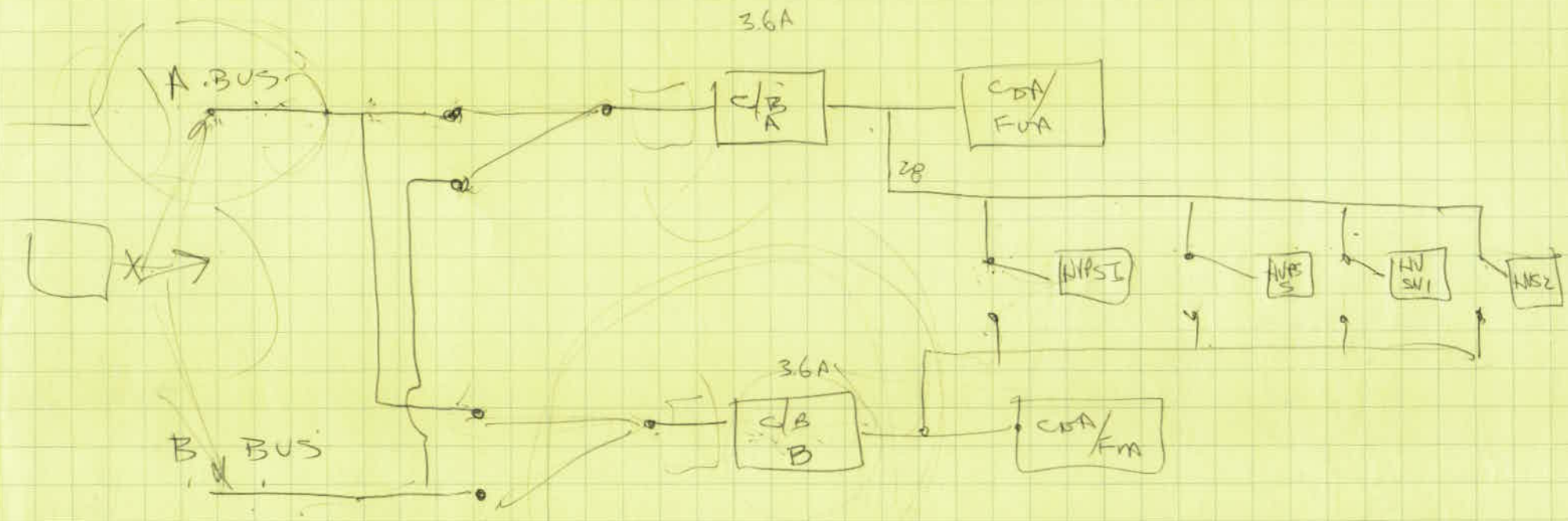
3.6A
A BUS
CB A
CDA/FUA
28
NPS I
NPS S
HV SW1
NPS2
3.6A
CB B
CDA/FM
B BUS

QA DB

ADP

Organization:


## Smithsonian Astrophysical Observatory

60 Garden St.
Cambridge MA, 02310


Program/Project:

## Chandra

## High Resolution Camera

Title:

## CHAPTER

# HRC EGSE

| | | | |
|---|---|---|---|
| **Project** | HRC | **Start Date:Time:** | |
| **Document Type** | Scanned Document | **End Date:Time:** | |
| **File** | hrc.poc.proc.ops.tex | **Test Conductor:** | |
| **Revision** | *Rev* | | |
| **Prepared By** | | | |
| **Make Date** | January 17, 2013 | | |

Document Configuration Management Information:

HRC RTCADS

Acquire | RTP/Log | TM CTUE | TM File | Commands | Alarms | DPP | PS Display | SS Display | EE Display | SAFE

## I/O Status

| | |
|---|---|
| YDHHMMSS | 1998151.012721 |
| VCDU | 1174678 |
| fmt:Mfn:mfn | 4(3):9177:22 |
| Alarm_File | 0.alarm |
| CMD_File | OCC.nil_mode.cmd |
| Capture_File | |
| Run_Time | : 60 : |

## SSD Rates Status

| | |
|---|---|
| TE Rate 1 (c/s) | 0 |
| TE Rates 2 (c/s) | 0 |
| VE Rate 1 (c/s) | 0 |
| VE Rates 2 (c/s) | 0 |
| SH Rate 1 (c/s) | 212 |
| SH Rates 2 (c/s) | 185 |

## EED Mechanisms Status

| | |
|---|---|
| Door LS Open ([un]act) | Act |
| Door LS Closed ([un]act) | Unact |
| +Y Shut LS Home ([un]ac | Act |
| +Y Shut LS Max ([un]act) | Unact |
| -Y Shut LS Home ([un]ac | Act |
| -Y Shut LS Max ([un]act) | Unact |
| Cal Src LS Home ([un]act | Act |
| Cal Src LS Max ([un]act) | Unact |

## EED Bus Select

| | |
|---|---|
| CEA-A LVPS Bus (A\|B) | A |
| CEA-B LVPS Bus (A\|B) | B |
| IM HVPS Bus (A\|B) | A |
| SP HVPS Bus (A\|B) | A |
| Shld 1 HVPS Bus (A\|B) | A |
| Shld 2 HVPS Bus (A\|B) | A |
| Shld Pmt Preamp A (1\|2) | 1 |
| Shld Pmt Preamp B (1\|2) | 2 |
| Det Preamps A (I\|S) | I |
| Det Preamps B (I\|S) | S |

## EED Fail Safes

| | |
|---|---|
| FS Master Relay (ena\|dis) | Dis |
| FS CalSrc Relay (ena\|dis) | Dis |
| FS +Y Shutter (ena\|dis) | Dis |
| FS -Y Shutter (ena\|dis) | Dis |

## SSD Mechanisms Status

| | |
|---|---|
| Selected Motor | None |
| Mv Twd Close (move\|stop | Stop |
| Mv Twd Open (move\|stop | Stop |
| Pri LS Close ([un]act) | UnAct |
| Sec LS Close ([un]act) | UnAct |
| Pri LS Open ([un]act) | UnAct |
| Sec LS Open ([un]act) | UnAct |

## EED LVPS Status

| | |
|---|---|
| +5V LVPS A (on\|off) | On |
| Sec +5V Bus A (V) | 4.84 |
| Sec +15V Bus A (V) | 14.53 |
| Sec -15V Bus A (V) | -14.45 |
| Sec +24V Bus A (V) | 23.36 |
| +5V LVPS B (V) | Off |
| Sec +5V Bus B (V) | 0.70 |
| Sec +15V Bus B (V) | 0.23 |
| Sec -15V Bus B (V) | -0.31 |
| Sec +24V Bus B (V) | 0.00 |

## SSD LVPS Status

| | |
|---|---|
| +24V LVPS (on\|off) | On |
| +15V LVPS (on\|off) | On |
| -15V LVPS (on\|off) | Off |
| +5V Bus Voltage (V) | 5.00 |
| +15V Bus Voltage (V) | 15.00 |
| -15V Bus Voltage (V) | -14.84 |
| +24V Bus Voltage (V) | 24.14 |
| Primary Bus Cur (A) | 146 |
| Primary Bus Voltage (V) | 30.44 |

## SSD Imager HVPS Status

| | |
|---|---|
| IM HVPS (on\|off) | Off |
| IM HVPS I Lim (ena\|dis) | Ena |
| IM Top HV Mon (dn) | 127 |
| IM Bot HV Mon (dn) | 127 |
| IM Top HV Step (step) | 0 |
| IM Bot HV Step (step) | 0 |

## SSD Spec HVPS Status

| | |
|---|---|
| SP HVPS (on\|off) | Off |
| SP HVPS I Lim (ena\|dis) | Ena |
| SP Top HV Mon (dn) | 127 |
| SP Bot HV Mon (dn) | 127 |
| SP Top HV Step (step) | 0 |
| SP Bot HV Step (step) | 0 |

## SSD Shld HVPS Status

| | |
|---|---|
| Shld 1 (on\|off) | On |
| Shld 1 HV Mon (dn) | 80 |
| Shld 1 HV Step (step) | 12 |
| Shld 2 (on\|off) | Off |
| Shld 2 HV Mon (dn) | 127 |
| Shld 2 HV Step (step) | 0 |

HRC EGSE Command List

---

revision 2.3
date: 1998/03/17 23:34:10; author: jhc;

---

Serial Digital Commands

---

| Command | Crit | lld | uld | Mnem | Description |
|---|---|---|---|---|---|
| sd0100 | 0 | 0 | 255 | 2SPHVOF | spect det hv off |
| sd0101 | 1 | 0 | 255 | 2SPHVON | spect det hv on |
| sd02YY | 1 | 0 | 255 | 2SPTTHV | spect top plate hv |
| sd03YY | 1 | 0 | 255 | 2SPTBHV | spect bot plate hv |
| sd0400 | 0 | 0 | 0 | 2SPCLDS | spect ilim disable |
| sd0401 | 0 | 1 | 1 | 2SPCLEN | spect ilim enable |
| sd0500 | 0 | 0 | 0 | 2S1HVOF | shield a hv off |
| sd0501 | 1 | 1 | 1 | 2S1HVON | shield a hv on |
| sd06YY | 0 | 0 | 255 | 2S1STHV | shield a hv step |
| sd0900 | 0 | 0 | 0 | 2IMHVOF | imaging det hv off |
| sd0901 | 1 | 1 | 1 | 2IMHVON | imaging det hv on |
| sd0aYY | 1 | 0 | 255 | 2IMTTHV | imaging top plate hv |
| sd0bYY | 1 | 0 | 255 | 2IMTBHV | imaging bot plate hv |
| sd0c00 | 0 | 0 | 0 | 2IMCLDS | imaging ilim disable |
| sd0c01 | 0 | 1 | 1 | 2IMCLEN | imaging ilim on |
| sd0d00 | 0 | 0 | 0 | 2S2HVOF | shield b hv off |
| sd0d01 | 1 | 1 | 1 | 2S2HVON | shield b hv on |
| sd0eYY | 0 | 0 | 255 | 2S2STHV | shield b hv step |
| sd1000 | 0 | 0 | 0 | 215PCAOF | +15v lv power supply off |
| sd1001 | 0 | 1 | 1 | 215PCAON | +15v lv power supply on |
| sd1100 | 0 | 0 | 0 | 215NCAOF | -15v lv power supply off |
| sd1101 | 0 | 1 | 1 | 215NCAON | -15v lv power supply on |
| sd1200 | 0 | 0 | 0 | 224PCAOF | +24v lv power supply off |
| sd1201 | 0 | 1 | 1 | 224PCAON | +24v lv power supply on |
| sd18YY | 0 | 0 | 255 | 2PSHBALD | mot ctrl pos word hi byte load |
| sd19YY | 0 | 0 | 255 | 2PSLBALD | mot ctrl pos word lo byte load |
| sd1a00 | 0 | 0 | 0 | 2OBSVASL | observing mode select |
| sd1a01 | 0 | 1 | 1 | 2NXILASL | next in line mode select |
| sd1b00 | 0 | 0 | 0 | 2SPIMASL | spect det in imaging mode |
| sd1b01 | 0 | 1 | 1 | 2SPNLASL | spect det in normal mode |
| sd20YY | 0 | 0 | 255 | 2CALBAAM | cal pulse amplitude |
| sd2100 | 0 | 0 | 0 | 2CLMDAOF | cal mode off |
| sd2101 | 0 | 1 | 1 | 2CLMDAON | cal mode on |
| sd22YY | 0 | 0 | 255 | 2FCPUALV | forced coarse pos u |
| sd23YY | 0 | 0 | 255 | 2FCPVALV | forced coarse pos v |
| sd24YY | 0 | 0 | 255 | 2CBHUALV | cb hi channel, u axis |
| sd25YY | 0 | 0 | 255 | 2CBLUALV | cb lo channel, u axis |
| sd26YY | 0 | 0 | 255 | 2CBHVALV | cb hi channel, v axis |
| sd27YY | 0 | 0 | 255 | 2CBLVALV | cb lo channel, v axis |
| sd28YY | 0 | 0 | 255 | 2ULDIATH | upper lvl threshold |
| sd29YY | 0 | 0 | 255 | 2LLDIATH | trigger lvl threshold |
| sd2bYY | 0 | 0 | 255 | 2GRDVAAM | grid bias voltage |
| sd2cYY | 0 | 0 | 255 | 2WDTHATH | coarse width threshold |
| sd2dYY | 0 | 0 | 255 | 2RSRFAAM | range switch setting |
| sd4000 | 0 | 0 | 0 | 2SHL1ADI | shield antico disable |
| sd4001 | 0 | 1 | 1 | 2SHL1AEN | shield antico enable |
| sd4100 | 0 | 0 | 0 | 2WDTHADI | width disable |
| sd4101 | 0 | 1 | 1 | 2WDTHAEN | width enable |
| sd4200 | 0 | 0 | 0 | 2ULDIADI | upper lvl disable |
| sd4201 | 0 | 1 | 1 | 2ULDIAEN | upper lvl enable |
| sd4300 | 0 | 0 | 0 | 2CBLKADI | center blank disable |
| sd4301 | 0 | 1 | 1 | 2CBLKAEN | center blank enable |
| sd4400 | 0 | 0 | 0 | 2EBLKADI | edge blank disable |
| sd4401 | 0 | 1 | 1 | 2EBLKAEN | edge blank enable |
| sd4500 | 0 | 0 | 0 | 2FIFOAOF | data fifo reset |
| sd4501 | 0 | 1 | 1 | 2FIFOAON | data fifo enable |
| sd4900 | 0 | 0 | 0 | 2SMOIADI | selected mtr overcurrent prot disable |
| sd4901 | 0 | 1 | 1 | 2SMOIAEN | selected mtr overcurrent prot enable |
| sd4a00 | 0 | 0 | 0 | 2SMOTAEN | selected mtr overtemp prot enable |
| sd4a01 | 0 | 1 | 1 | 2SMOTADI | selected mtr overtemp prot disable |
| sd5000 | 0 | 0 | 0 | 2CHPLADI | clos/home primary limit sw disa |
| sd5001 | 0 | 1 | 1 | 2CHPLAEN | clos/home primary limit sw enable |
| sd5100 | 0 | 0 | 0 | 2CHSLADI | clos/home secondary lim sw disa |
| sd5101 | 0 | 1 | 1 | 2CHSLAEN | clos/home secondary lim sw enable |
| sd5200 | 0 | 0 | 0 | 2OMPLADI | open/max primary limit sw disa |

| | | | | | |
|---|---|---|---|---|---|
| sd5201 | 0 | 1 | 1 | 2OMPLAEN | open/max primary limit sw enable |
| sd5300 | 0 | 0 | 0 | 2OMSLADI | open/max secondary lim sw disa |
| sd5301 | 0 | 1 | 1 | 2OMSLAEN | open/max secondary lim sw enable |
| sd5400 | 0 | 0 | 0 | 2STFLADI | clear stop flags |
| sd5401 | 0 | 1 | 1 | 2STFLAEN | enable stop flags |
| sd6800 | 0 | 0 | 0 | 2MDRVADI | motor drive disable |
| sd6801 | 0 | 1 | 1 | 2MDRVAEN | motor drive enable |
| sd69YY | 1 | 0 | 1 | 2MVPSAEX | step from home to pos ctr value |
| sd6aYY | 1 | 0 | 1 | 2MVLAAEX | move to clos/home limit switch |
| sd6bYY | 1 | 0 | 1 | 2MVLBAEX | move to open/max limit switch |
| sd6cYY | 1 | 0 | 1 | 2NSTAAEX | move n steps toward clos/home ls |
| sd6dYY | 1 | 0 | 1 | 2NSTBAEX | move n steps toward open/max ls |
| sd6fYY | 0 | 0 | 255 | 2MCMRASL | motion control mode reset |
| sd70YY | 0 | 0 | 255 | 2ALMTADS | all motors deselect |
| sd71YY | 0 | 0 | 255 | 2DRMTASL | door motor select |
| sd72YY | 0 | 0 | 255 | 2CLMTASL | calsrc motor select |
| sd73YY | 0 | 0 | 255 | 2PYMTASL | +y shutter motor select |
| sd74YY | 0 | 0 | 255 | 2NYMTASL | -y shutter motor select |

High Level Pulse Commands

| Command | Crit | Mnem | Description |
|---|---|---|---|
| hlp22 | 1 | 2FSMREN | FAILSAFE MASTER RELAY ENABLE |
| hlp24 | 0 | 2FSMRDI | FAILSAFE MASTER RELAY DISABLE |
| hlp25 | 1 | 2FSCSEN | FAILSAFE CALSRC RELAY ENABLE |
| hlp28 | 0 | 2FSCSDI | FAILSAFE CALSRC RELAY DISABLE |
| hlp32 | 0 | 2C1BASL | BUS A select, CEA A LVPS |
| hlp33 | 0 | 2C1BBSL | BUS B SELECT, CEA A LVPS |
| hlp34 | 0 | 2IMBASL | BUS A SELECT, IMAGING HVPS |
| hlp36 | 0 | 2IMBBSL | BUS B SELECT, IMAGING HVPS |
| hlp37 | 0 | 2S1BASL | BUS A SELECT, SHIELD A HVPS |
| hlp38 | 0 | 2S1BBSL | BUS B SELECT, SHIELD A HVPS |
| hlp39 | 0 | 2PRASSL | SPECTR DETECTOR SELECT, PREAMP A |
| hlp3a | 0 | 2PRAISL | IMAGING DETECTOR SELECT, PREAMP A |
| hlp3b | 0 | 2PRA1SL | SHIELD PMT 1 SELECT, PREAMP A |
| hlp3d | 0 | 2PRA2SL | SHIELD PMT 2 SELECT, PREAMP A |
| hlp3e | 0 | 205VAON | +5V LV POWER SUPPLY A ON |
| hlp3f | 0 | 205VAOF | +5V LV POWER SUPPLY A OFF |
| hlp65 | 1 | 2FSPYEN | FAILSAFE +Y SHUTTER ENABLE |
| hlp66 | 0 | 2FSPYDI | FAILSAFE +Y SHUTTER DISABLE |
| hlp69 | 1 | 2FSNYEN | FAILSAFE -Y SHUTTER ENABLE |
| hlp6a | 0 | 2FSNYDI | FAILSAFE -Y SHUTTER DISABLE |
| hlp74 | 0 | 2C2BASL | BUS A SELECT, CEA B LVPS |
| hlp75 | 0 | 2C2BBSL | BUS B SELECT, CEA B LVPS |
| hlp76 | 0 | 2SPBASL | BUS A SELECT, SPECTROSCOPY HVPS |
| hlp77 | 0 | 2SPBBSL | BUS B SELECT, SPECTROSCOPY HVPS |
| hlp78 | 0 | 2S2BASL | BUS A SELECT, SHIELD B HVPS |
| hlp79 | 0 | 2S2BBSL | BUS B SELECT, SHIELD B HVPS |
| hlp7a | 0 | 2PRBSSL | SPECTR DETECTOR SELECT, PREAMP B |
| hlp7b | 0 | 2PRBISL | IMAGING DETECTOR SELECT, PREAMP B |
| hlp7c | 0 | 2PRB1SL | SHIELD PMT 1 SELECT, PREAMP B |
| hlp7d | 0 | 2PRB2SL | SHIELD PMT 2 SELECT, PREAMP B |
| hlp7e | 0 | 205VBON | +5V LV POWER SUPPLY B ON |
| hlp7f | 0 | 205VBOF | +5V LV POWER SUPPLY B OFF |

Organization:


**Smithsonian Astrophysical Observatory**

60 Garden St.
Cambridge MA, 02310


Program/Project:

**Chandra**

**High Resolution Camera**

Title:

# CHAPTER

# HRC Temperatures

| | | | |
|---|---|---|---|
| **Project** | HRC | **Start Date:Time:** | |
| **Document Type** | Scanned Document | **End Date:Time:** | |
| **File** | hrc.poc.proc.ops.tex | **Test Conductor:** | |
| **Revision** | *Rev* | | |
| **Prepared By** | | | |
| **Make Date** | January 17, 2013 | | |

Document Configuration Management Information:

Thomas Lees vs Egso vs TRW Insurances

TEMPSENS
3/22/97

HRC TEMPERATURE SENSORS

| Sensor name<br>Terminals located | Location | Monitored<br>CHANNEL # | REF DES |
|---|---|---|---|
| | A SIDE THERMISTORS | | |
| PREAMPTMPA<br>FEJ9 49/50 | Preamp card FE slot 9 | HRC HK - A - 106 | |
| SDETTEMPA<br>DHP142 53/54 | Inside detector housing<br>Located on floor -X | HRC HK - A -110 | SDRT3 |
| IDETTEMPA<br>DHP140 53/54 | Inside detector housing<br>Located on IMG DET | HRC HK - A - 111 | IDRT1 |
| LVPSTMPA<br>CEP150 2/1 | Low voltage power<br>supply A | HRC HK - A - 113 | |
| SHVTMPA<br>CEP162 26/27 | Spectroscopy HV<br>power supply heat sink | HRC HK A - 114 | |
| IHVTMPA<br>CEP163 26/27 | IMAGING HV<br>power supply heat sink | HRC HK A - 115 | |
| TH1A<br>CEPM1 36/17 | DOOR MOTOR via mux<br>+X Motor face | HRC HK A - 118 | |
| TH2A<br>CEPM2 36/17 | CAL MOTOR via mux<br>Motor ???? | HRC HK A - 118 | |
| TH3A<br>CEPM3 36/17 | + Y MOTOR via mux<br>Near wire entry grommet | HRC HK A- 118 | |
| TH3A 4?<br>CEPM3 36/17 | - Y MOTOR via mux<br>Near wire entry grommet | HRC HK A - 118 | |
| FETMPA<br>FEBP | FE box center wall top<br>between SLOTS 24 & 25<br>Near access panel | HRC HK A - 119 | FERT2 |

| | | | |
|---|---|---|---|
| CE_TMP1A<br>CEBP | CE box center wall bottom<br>between SLOTS 18 & 19 | HRC HK A - 120 | CERT1 |
| CE_TMP2A<br>CEBP | CE box center wall top<br>between SLOTS 9 & 10<br>+ X surface | HRC HK A - 121 | CERT1 |

| Sensor name<br>Terminals located | Location | Monitored<br>CHANNEL # | REF DES |
|---|---|---|---|
| | B SIDE THERMISTORS | | |
| PREAMPTMPB<br>FEJ10 49/50 | Preamp card FE slot 10 | HRC HK B - 106 | |
| SDETTEMPB<br>DHP142 77/78 | Inside detector housing<br>Located on SPECT DET | HRC HK B -110 | SDRT1 |
| IDETTEMPB<br>DHP140 77/78 | Inside detector housing<br>Located on floor -X | HRC HK B - 111 | IDRT3? |
| LVPSTMPB<br>CEP151 2/1 | Low voltage power<br>supply B | HRC HK B - 113 | |
| SHVTMPB<br>CEP162 28/29 | Spectroscopy HV<br>power supply heat sink | HRC HK B - 114 | |
| IHVTMPB<br>CEP163 28/29 | IMAGING HV<br>power supply heat sink | HRC HK B - 115 | |
| TH1B<br>CEPM1 25/6 | DOOR MOTOR via mux<br>+Y Motor face | HRC HK B - 118 | |
| TH2B<br>CEPM2 25/6 | CAL MOTOR via mux<br>Motor ???? | HRC HK B - 118 | |
| TH3B<br>CEPM3 25/6 | + Y MOTOR via mux<br>Near wire entry grommet | HRC HK B - 118 | |
| TH3B<br>CEPM3 25/6 | - Y MOTOR via mux<br>Near wire entry grommet | HRC HK B - 118 | |
| FETMPB | FE box center wall top | HRC HK B - 119 | FERT3 |

| | | | |
|---|---|---|---|
| FEBP | between SLOTS 25 & 26<br>Center wall near access panel | | |
| CE_TMP1B<br>CEBP | CE box on back plane<br>between SLOTS 18 & 19 | HRC HK B - 120 | CERT3 |
| CE_TMP2B<br>CEBP | CE box center wall top<br>between SLOTS 9 & 10<br>+ X surface | HRC HK B- 121 | CERT4 |

NOTE: ALL "SCPA#" ARE TRW SUPPLIED THERMISTORS

{{{{{ NOT YSI44908 }}}}}

| Sensor name<br>Terminals located<br>DES | Location | Monitored<br>CHANNEL # | REF |
|---|---|---|---|
| PMT1TMP<br>CEXP164 19/20 | PMT1 HV<br>POWER SUPPLY<br>On heat sink | SCPA1 | |
| PMT2TMP<br>CEXP165 19/20 | PMT1 HV<br>POWER SUPPLY<br>On heat sink | SCPA2 | |
| DETHSTMP1<br>CPIGTMP 11/13<br>CEJ174 4/9 | External via CEJ174<br>on bottom of det hse near<br>thermostats. Common return<br>With SCPA4 | SCPA3 | |
| DETHSTMP2<br>CPIGTMP 12/14<br>CEJ174 5/9 | External via CEJ174<br>on bottom of det hse near<br>center. Common return<br>With SCPA3 | SCPA4 | |
| FEBOXTMP<br>FEBP | FEBP On inside -Z wall<br>near A/D slot FEJ34<br>Under survival heater | SCPA5 | FERT1 |
| CEBOXTMP<br>CPIGTMP 1/6 | CE BACK PLANE<br>inside +Z wall under<br>survival heaters | SCPA6 | |
| TMP07 | External via CEJ174 | TMP07 | +XTEMP |

| | | | |
|---|---|---|---|
| CPIGTMP 2/7<br>CEJ174 1/6 | On snout | | |
| TMP08<br>CPIGTMP 3/8 | External via CEJ174<br>On conduit | TMP08 | -XTEMP |
| TMP09<br>CPIGTMP 4/9<br>CEJ174 3/8 | External via CEJ174<br>ACCESS COVER | TMP09 | +YTEMP |
| TMP10 | HV POWER SUPPLY<br>BRACKET | TMP10 | -YTEMP |

TEMPMON *NOTES ADDED IN ITALIC 5/23 & 5/25/DB*
To Jack Gomes >From E.A. Johnston Subject: Thermistor locations
Date APRIL 24,1996 Updated 11/29/95 Updated 5/16/96

| Sensor name | Location | CHANNEL # |
|---|---|---|
| SDETTMPA<br>DHP142 53/54 | INSIDE DETECTOR HOUSING<br>Located on floor -X | HRC HK-A 110 |
| IDETTMPA<br>DHP140 53/54 | INSIDE DETECTOR HOUSING<br>Located on Img detector | HRC HK-A 111 |
| PREAMPTMPA<br>FEJ9 49/50 | PREAMP CARD FE SLOT 9 | HRC HK-A 112 |
| LVPSTMPA<br>CEP150 2/1 | LOW VOLTAGE POWER SUPPLY A<br>*THRU HOLE IN CKT BOARD, ON HEAT SINK PLATE* | HRC HK-A 113 |
| SHVTMPA<br>CEP162 26/27 | SPECTROSCOPY HV POWER SUPPLY<br>*ON POWER TRANSISTOR HEAT SINK BLOCK* | HRC HK-A 114 |
| IHVTMPA<br>CEP163 26/27 | IMAGING HV POWER SUPPLY<br>*ON POWER TRANSISTOR HEAT SINK BLOCK* | HRC HK-A 115 |
| TH1A<br>CEPM1 36/17 | DOOR MOTOR<br>*+Y FACE* | VIA MUX HRC HK-A 118 |
| TH2A<br>CEPM2 36/17 | CAL MOTOR<br>*CENTER INSIDE DOOR* | VIA MUX HRC HK-A 118 |
| TH3A<br>CEPM3 36/17 | +Y MOTOR<br>*ADJACENT WIRE ENTRY GROMMET* | VIA MUX HRC HK-A 118 |
| TH4A<br>CEPM4 36/17 | -Y MOTOR<br>*ADJACENT WIRE ENTRY GROMMET* | VIA MUX HRC HK-A 118 |
| FETMPA<br>FEBP FPIGTMP 44/63 | FRONT END BOX RT2<br>*CENTER WALL +X NEAR ACCESS PANEL* | HRC HK-A 119 ?? |
| CE__1TMPA<br>CETMP__1TMPA | INSIDE CE ASSY RT1<br>*NOT* bottom of center wall between slots 18 & 19*NOT*! | HRC HK-A 120 |
| CE__2TMPA<br>CETMP__2TMPA | INSIDE CE ASSY RT2<br>Top of center wall +X SURFACE between slots 9 & 10 | HRC HK-A 121 |
| SDETTMPB<br>DHP142 77/78 | INSIDE DETECTOR HOUSING<br>Located on Spect detector | HRC HK-B 110 |
| IDETTMPB<br>DHP140 77/78 | INSIDE DETECTOR HOUSING<br>Located on floor -X | HRC HK-B 111 |
| PREAMPTMPB<br>FEJ10 49/50 | PREAMP CARD FE SLOT 10 | HRC HK-B 112 |
| LVPSTMPB<br>CEP151 2/1 | LOW VOLTAGE POWER SUPPLY A<br>*THRU HOLE IN CKT BOARD, ON HEAT SINK PLATE* | HRC HK-B 113 |
| SHVTMPB<br>CEP162 28/29 | SPECTROSCOPY HV POWER SUPPLY<br>*ON POWER TRANSISTOR HEAT SINK BLOCK* | HRC HK-B 114 |
| IHVTMPB<br>CEP163 28/29 | IMAGING HV POWER SUPPLY<br>*ON POWER TRANSISTOR HEAT SINK BLOCK* | HRC HK-B 115 |
| TH1B<br>CEPM1 25/6 | DOOR MOTOR<br>*+Y FACE* | VIA MUX HRC HK-B 118 |
| TH2B<br>CEPM2 25/6 | CAL MOTOR<br>*CENTER INSIDE DOOR* | VIA MUX HRC HK-B 118 |
| TH3B<br>CEPM3 25/6 | +Y MOTOR<br>*ADJACENT WIRE ENTRY GROMMET* | VIA MUX HRC HK-B 118 |
| TH4B<br>CEPM4 25/6 | -Y MOTOR<br>*ADJACENT WIRE ENTRY GROMMET* | VIA MUX HRC HK-B 118 |
| FETMPB<br>FETMPB T/B | FRONT END BOX RT3<br>*CENTER WALL +X NEAR ACCESS PANEL* | HRC HK-B 119 |
| CE__1TMPB<br>CETMP__1TMPB T/B | INSIDE CE ASSY RT3<br>near filter ???????? | HRC HK-B 120 ?? |
| CE__2TMPB<br>CETMP__2TMPB T/B | INSIDE CE ASSY RT4<br>Top of center wall opposite slots 9 & 10 *-X SURFACE OF CTR WALL* | HRC HK-B 121 |

***NOTE: ALL SC PA# THERMISTORS ARE TRW-SUPPLIED, NOT YSI!!***

| | | | |
|---|---|---|---|
| T_Pmt1 | PMT1TMP<br>CEXP164/1 7/6 | PMT1 HV POWER SUPPLY<br>*ON POWER TRANSISTOR HEAT SINK BLOCK* | SC PA 1 |
| T_Pmt2 | PMT2TMP<br>CEXP165/1 7/6 | PMT2 HV POWER SUPPLY<br>*ON POWER TRANSISTOR HEAT SINK BLOCK* | SC PA 2 |
| T_OvDet1 | DETHSTMP1<br>CPIGTMP 11/13<br>CEJ174 4/9 | AVAILABLE FROM CE BP<br>External via CEJ174 locate<br>on bottom of detector housing<br>near thermostats. requires common return line with SC PA 4 at CEJ174 | SC PA 3 |
| T_OvDet2 | DETHSTMP2<br>CPIGTMP 12/14<br>CEJ174 5/9 | AVAILABLE FROM CE BP<br>External via CEJ174 locate<br>on bottom of detector housing<br>near center. requires common return line with SC PA 3 at CEJ174 | SC PA 4 |
| T_FEABox | FEBOXTMP<br>FPIG123 44/63 | AVAILABLE FROM FE BP RT1<br>Dave wants near input lines<br>NO! NO! NO! *INSIDE -Z FACE UNDER SURVIVAL HEATERS* | SC PA 5 ?? |
| T_CEABox | CEBOXTMP<br>CPIGTMP 1/6 | AVAILABLE FROM CE BP<br>Near survival heater ??? *INSIDE +Z FACE UNDER SURVIVAL HEATERS* | SC PA 6 ?? |
| T_Snout | TMP07<br>CPIGTMP 2/7<br>CEJ174 1/6 | AVAILABLE FROM CE BP<br>External via CEJ174 locate<br>on snout *ON UVLS TOP NEXT TO SNOUT* | SC PA 7 |
| T_Conduit | TMP08<br>CPIGTMP 3/8<br>CEJ174 2/7 | AVAILABLE FROM CE BP<br>External via CEJ174 locate<br>on edege of conduit | SC PA 8 |
| T_PY (Fee) | TMP09<br>CPIGTMP 4/9<br>CEJ174 3/8 | AVAILABLE FROM CE BP ???<br>External via CEJ174 locate<br>on TBD *PROBABLY ON FEA ACCESS PANEL EXTERNAL* | SC PA 9 ?? |
| T MY (Cee) | TMP10<br>CPIGTMP 5/10 | AVAILABLE FROM CE BP ???<br>*DETECTOR HVPS BRACKET IN CEA* | SC PA 10 ?? |

TABLE 2 -- Temperature Limits (Celsius)TABLE 2 --

(Display Screen Format)

Screen labels in plain font **- temp meas designation or byte in bold**

| MEASUREMENT | Deg C | MEASUREMENT | DegC | Max |
|---|---|---|---|---|
| FEA Card Rack | **119** | SPEC Detector | **110** | 50 |
| CEA Card Rack | **120** | IMAGING Detector | **111** | 50 |
| CEA Card Rack<br><br>**FEA:** | **121** | **DETECTOR HOUSING:** | | |
| Survival Heater | **FEBOXTMP** | Corner (near FEA) | **DET HST MP1** | 50 |
| +Y Panel | **TMP09** | Center | **DET HST MP2** | 50 |
| Preamp Card | **112** | | | |
| **CEA:** | | **EXTERNAL:** | | |
| SPECTROSCOPY HVPS | **114** | Motor (selectable) | **118** | 50 |
| IMAGING HVPS | **115** | Conduit -X | **TMP0 8** | 50 |
| LVPS | **113** | Snout | **TMP0 7** | 50 |
| HVPS BRACKET | **TMP10** | PMT#1 | **PMT1 TMP** | 50 |
| Survival Heater | **CEBOXTMP** | PMT#2 | **PMT2 TMP** | 50 |

Organization:


**Smithsonian Astrophysical Observatory**

60 Garden St.
Cambridge MA, 02310


Program/Project:

**Chandra**

**High Resolution Camera**

Title:

# CHAPTER

# HRC Survival Heaters

| | | | |
|---|---|---|---|
| **Project** | HRC | **Start Date:Time:** | |
| **Document Type** | Scanned Document | **End Date:Time:** | |
| **File** | hrc.poc.proc.ops.tex | **Test Conductor:** | |
| **Revision** | *Rev* | | |
| **Prepared By** | | | |
| **Make Date** | January 17, 2013 | | |

Document Configuration Management Information:

| ZONE | LTR | REVISIONS DESCRIPTION | DATE | APPROVED |
|---|---|---|---|---|
| | B | REVISED PER ECO 21036 | | |

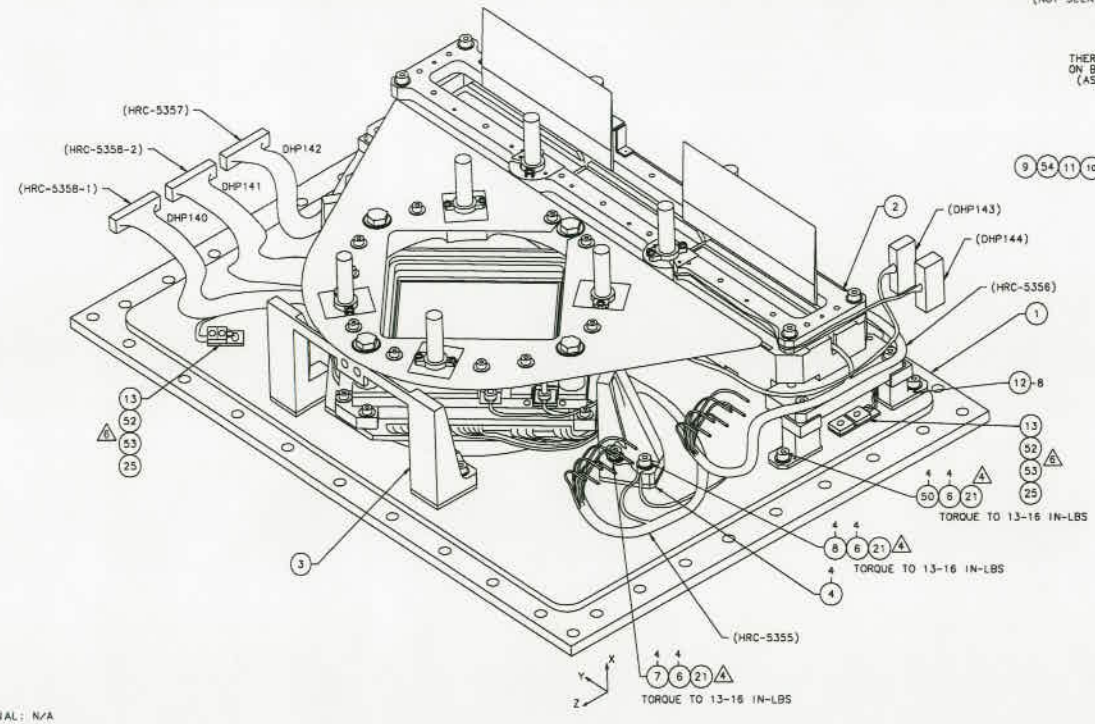


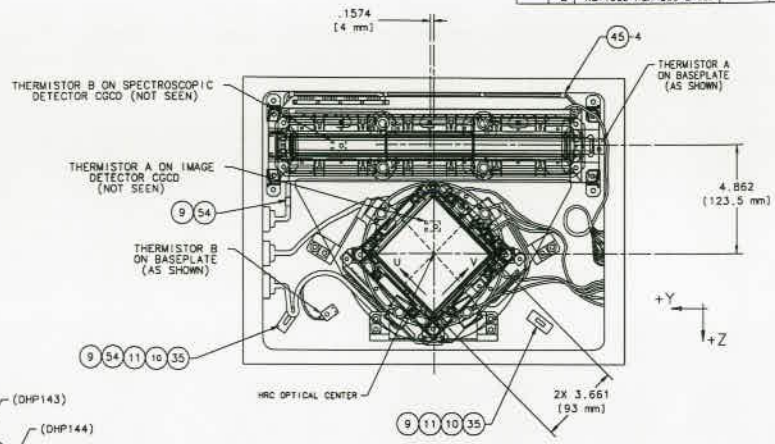


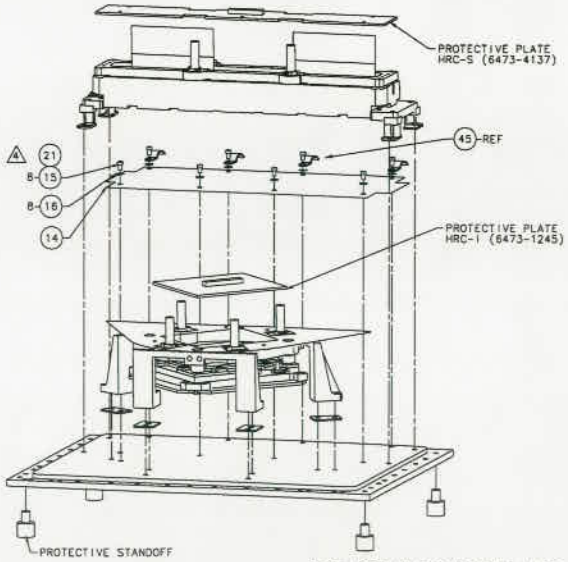


SEE SEPARATE PARTS LIST

NOTES:

1. MATERIAL: N/A
2. FINISH: N/A
3. ASSEMBLE PER P-HRC-589.
4. STAKE HARDWARE USING ITEM 21. CURE AT ROOM TEMPERATURE FOR 1 HOUR.
5. EPOXY STAKE STRIP HEATER IN EACH CORNER USING THE MIX RATIO DESCRIBED IN NOTE 6.
6. BOND ITEM SHOWN TO BASEPLATE WITH EPOXY USING ITEM 52 WITH ITEM 53. MIX RATIO : 3 PT BY WT OF ITEM 52 TO 2 PT BY WT OF ITEM 53. CURE AT ROOM TEMPERATURE FOR 24 HRS.
7. HANDLE ALL PARTS WITH NON-POWDERED GLOVES.
8. WIRE PER INTERCONNECT DIAGRAM HRC-5398 AND GENERAL WIRING PROCEDURE P-HRC-320 CLASS II.
9. BOND ITEM 35 TO ITEM 1 AS REQUIRED TO SECURE CABLE. BOND USING ITEM 10 WITH ITEM 11. MIX RATIO: 5 PT BY WT OF ITEM 11 TO 7 PT BY WT OF ITEM 10. CURE AT ROOM TEMPERATURE FOR 24 HOURS. DO NOT ENCLOSE LIGHT WEIGHTING POCKETS.
10. MARK REF DESIGNATIONS ON ITEM 40 AND 41 USING ITEM 42.
11. PLACE CONNECTOR LABELS APPROX ONE INCH FROM EACH CONNECTOR MARKED AS SHOWN ON HRC-5398. PLACE THERMISTOR AS SHOWN, MARKED AS INDICATED ON SHEET 2 OF THIS DRAWING. (LABELS ARE SIZED TO ACCOMMODATE MARKING).
12. CONFORMAL COAT ALL EXPOSED ELECTRICAL WIRING CONNECTIONS WITH ITEM 43.

REMOVE BURRS AND BREAK SHARP EDGES
UNLESS OTHERWISE SPECIFIED DIMENSIONS ARE IN INCHES
TOLERANCES ON FRACTIONS ± DECIMALS ± ANGLES ±
FINISH:
MATL: FIN:
NEXT ASSY: HRC-501

SMITHSONIAN ASTROPHYSICAL OBSERVATORY
CENTRAL ENGINEERING

BOTTOM PLATE ASSEMBLY

SIZE E | CODE IDENT NO. 50944 | DWG NO. HRC-589 | REV B

SCALE NONE | IDEAS MS5 | SHEET 1 OF 2

| REVISIONS | | | | |
|---|---|---|---|---|
| ZONE | LTR | DESCRIPTION | DATE | APPROVED |
| | B | REVISED PER ECO 21036 | | |

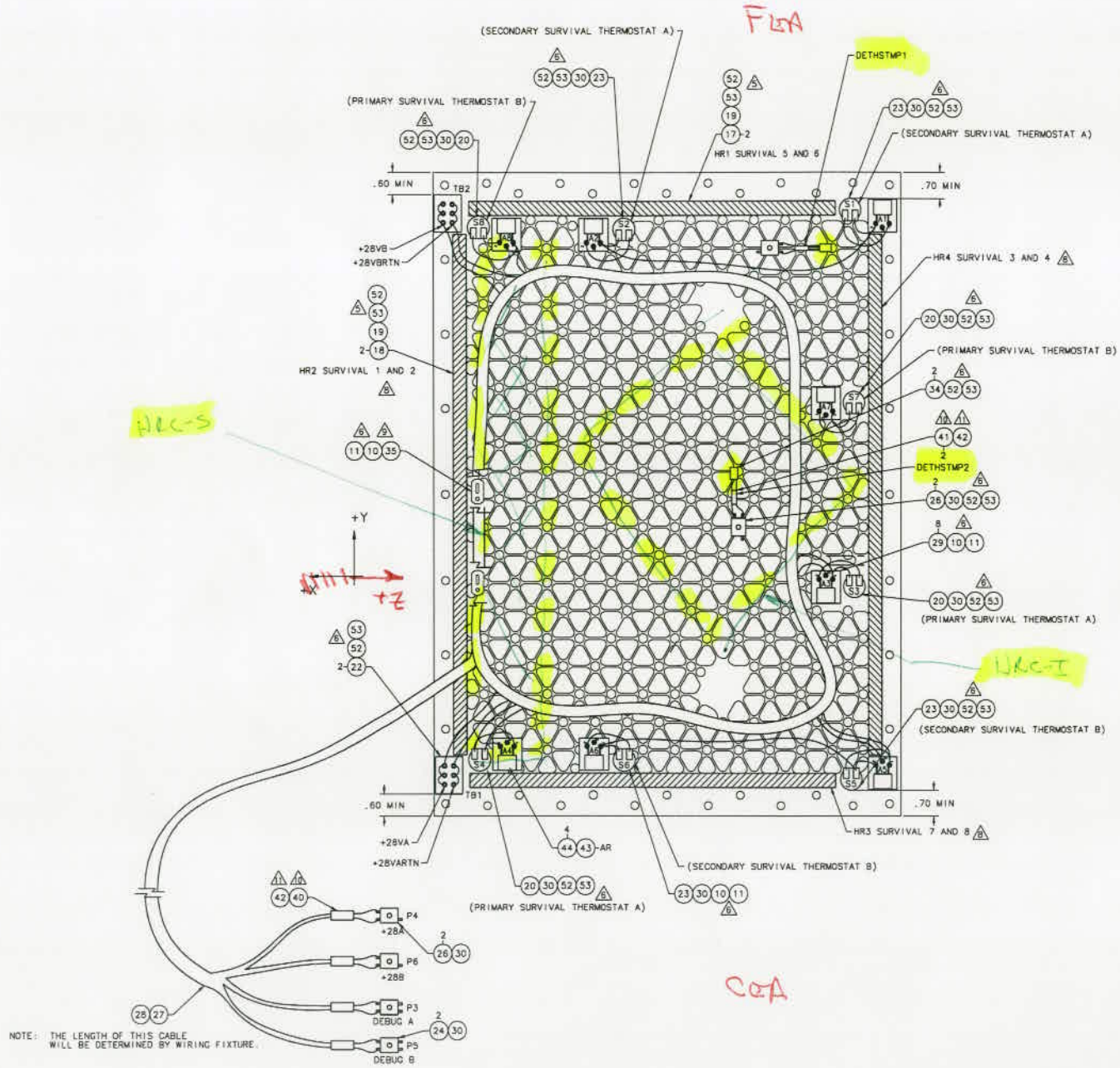


SEE SEPARATE PARTS LIST

| | | | |
|---|---|---|---|
| REMOVE BURRS AND BREAK SHARP EDGES | DR J.BARCO DATE 3-14-86 | CHK R.BERNICE DATE 06-27-86 | SMITHSONIAN ASTROPHYSICAL OBSERVATORY CENTRAL ENGINEERING CAMBRIDGE, MA. |
| UNLESS OTHERWISE SPECIFIED DIMENSIONS ARE IN INCHES | DESIGN APPR DATE | | |
| TOLERANCES ON FRACTIONS ± 1/32 DECIMALS ± .005 ANGLES ± | DRAW APPR DATE | | BOTTOM PLATE ASSEMBLY |
| MATL. FIN. | CHGR APPR DATE | JOHN POLIZOTTI 9-9-86 | |
| MATL'L FIN. | PROJ APPR DATE | J.P. FOR R.W. 9-9-86 | SIZE E / CODE IDENT NO. 50944 / DWG NO. HRC-589 / REV B |
| NEXT ASSY HRC-501 | APPROVED DR | E.SALEY FOR RD 9-9-86 | SCALE NONE / IDEAS MSS / SHEET 2 OF 2 |

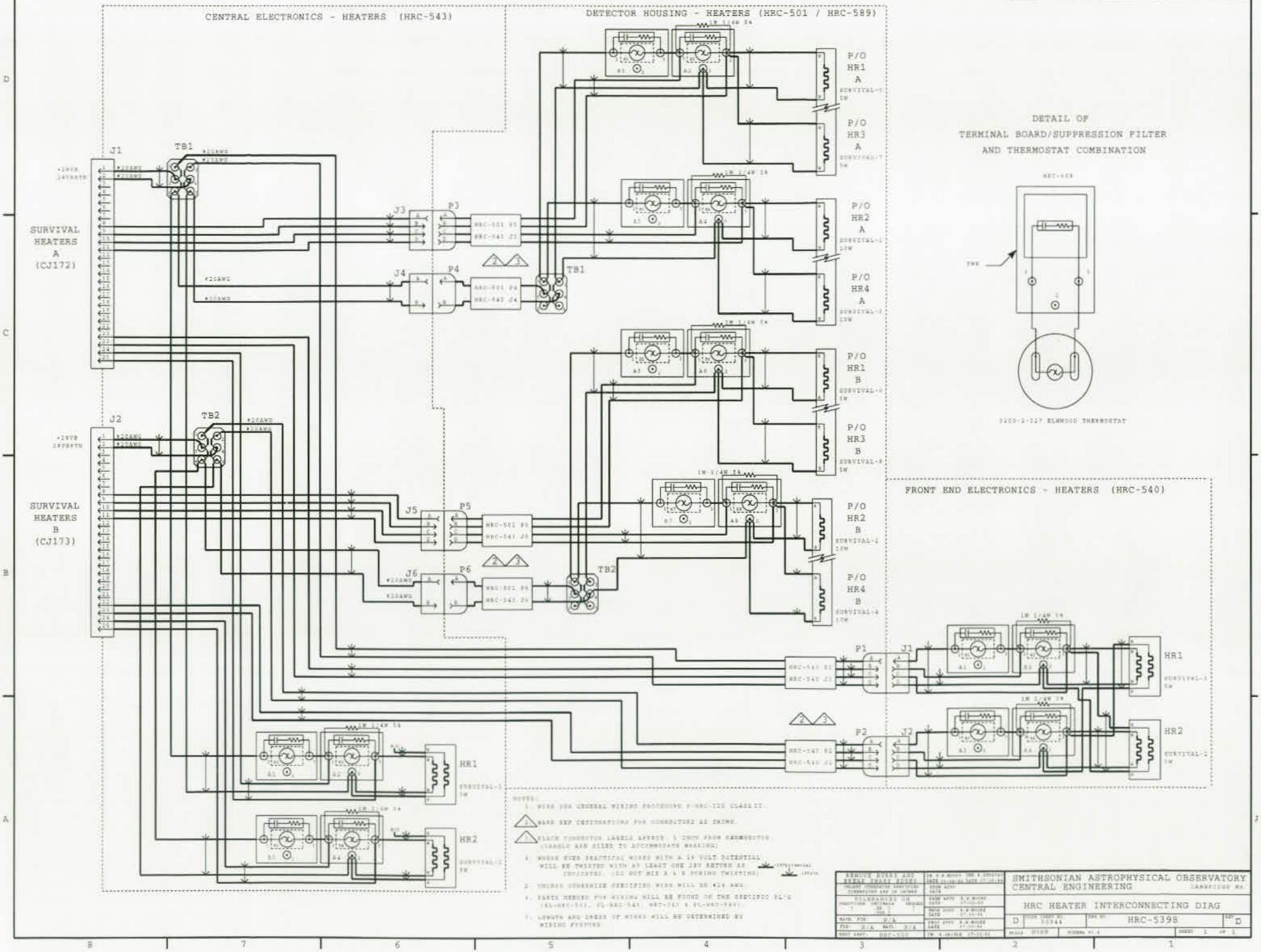
CENTRAL ELECTRONICS - HEATERS (HRC-543)
DETECTOR HOUSING - HEATERS (HRC-501 / HRC-589)
FRONT END ELECTRONICS - HEATERS (HRC-540)
DETAIL OF
TERMINAL BOARD/SUPPRESSION FILTER
AND THERMOSTAT COMBINATION
SURVIVAL HEATERS A (CJ172)
SURVIVAL HEATERS B (CJ173)
J1
J2
TB1
TB2
J3
J4
J5
J6
P3
P4
P5
P6
P1
P2
HR1
HR2
P/O HR1 A
P/O HR3 A
P/O HR2 A
P/O HR4 A
P/O HR1 B
P/O HR3 B
P/O HR2 B
P/O HR4 B
1W 1/4W 5%
#20AWG
SMITHSONIAN ASTROPHYSICAL OBSERVATORY
CENTRAL ENGINEERING
CAMBRIDGE MA.
HRC HEATER INTERCONNECTING DIAG
HRC-539B
D

| | | | | |
|---|---|---|---|---|
| DLT | * SW | A | JA-9 | JA-8 |
| DT | 10W | A | JA-11 | JA10 |
| FLA | SW | A | JA-23 | JA-22 |
| CON | SW | A | JA-25 | JA-24 |

| | | | | |
|---|---|---|---|---|
| DT | SW | B | JB-9 | JB-8 |
| DT | 10W | B | JB-11 | JB-10 |
| FLA | SW | B | JB-23 | JB-22 |
| CON | SW | B | JB-25 | JB-24 |

OUTPUT OF 2ND T/S

BUTTON T/S

Jx-2 VOLTAGE

Jx-2 VOLTAGE

Jx-1 RESISTANCE [T/S 2]

RESISTANCE [T/S 2]

(HRC-500 SHT 2)

172

A

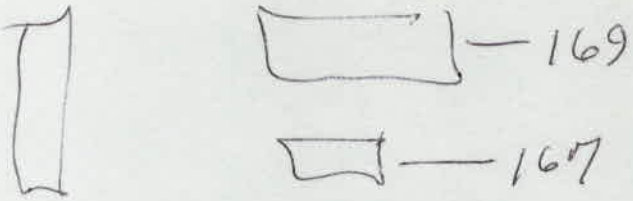


173

B

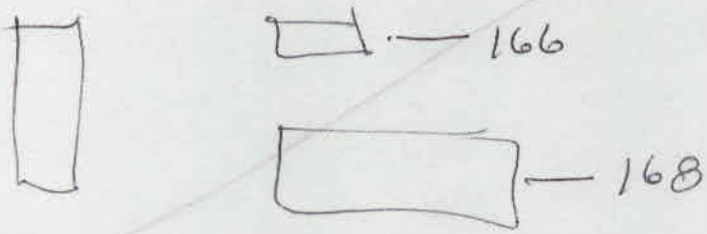


OHMS

A

9-2 — 48.8

11-2 — 25.2

23-2 — 48.8

25-2 — 93.1

B

9-2 — 48.6

11-2 — 25.0

23-2 — 48.9

25-2 — 95.2

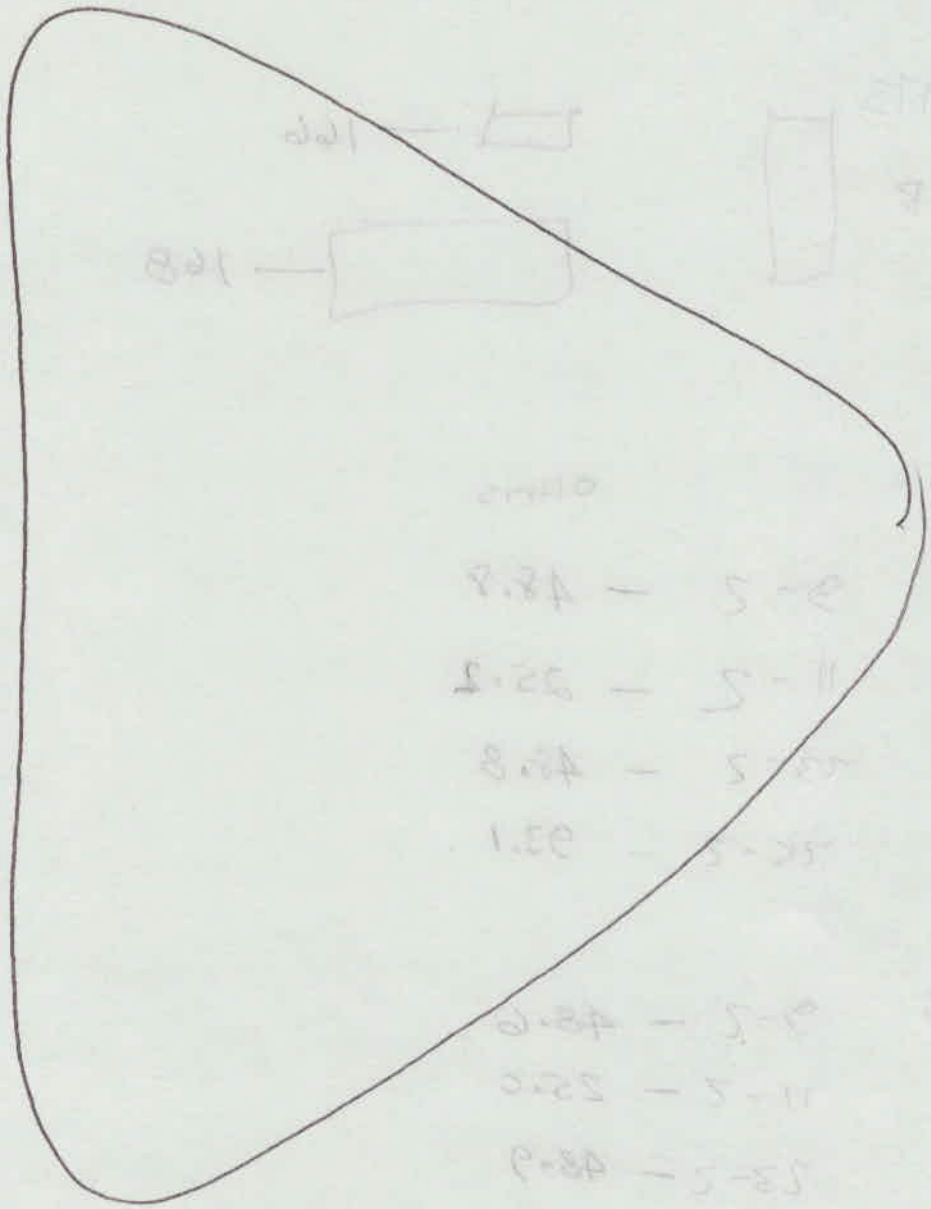

Organization:


**Smithsonian Astrophysical Observatory**

60 Garden St.
Cambridge MA, 02310


Program/Project:

**Chandra**

**High Resolution Camera**

Title:

# CHAPTER

# HRC HV

| | | | |
|---|---|---|---|
| **Project** | HRC | **Start Date:Time:** | |
| **Document Type** | Scanned Document | **End Date:Time:** | |
| **File** | hrc.poc.proc.ops.tex | **Test Conductor:** | |
| **Revision** | *Rev* | | |
| **Prepared By** | | | |
| **Make Date** | January 17, 2013 | | |

Document Configuration Management Information:

N MAY 97

| | WAS | IS | (1/2 VALUE) |
|---|---|---|---|
| HRC-I | | | |
| TOP | 77 | 79 | 42 |
| BOT | 88 | 91 | 53 |
| HRC-S | | | |
| TOP | 87 | 90 | 43 |
| BOT | 98 | 102 | 54 |

26 APR 99

POC

I

| | Bot | Top |
|---|---|---|
| | 89 (+513V) | 78 (-1510V) |
| ½ | 51 | 40 |
| | 38 | 38 |
| | 8,7,8,7,8 | |
| | 51 ✓ | 40 ✓ |
| | 59 ✓ | 48 ✓ |
| | 66 ✓ | 55 ✓ |
| | 74 ✓ | 63 ✓ |
| | 81 ✓ | 70 ✓ |
| | 89 ✓ | 78 ✓ |

| | | |
|---|---|---|
| S | 104 (-1800V) | 92 (-1770V) |
| | 59 | 47 |
| | Δ = 45 | Δ = 45 |
| | 59 ✓ | 47 ✓ |
| | 68 ✓ | 56 ✓ |
| | 77 ✓ | 65 ✓ |
| | 86 ✓ | 74 ✓ |
| | 95 ✓ | 83 ✓ |
| | 104 ✓ | 92 ✓ |

T B
92 104

```
diff -r --brief FULL_DISTRIBUTION.990412.1500 FULL_DISTRIBUTION.990426.073615

AXAF HRC HTML Command Description File
--------------------------------------

This DIFFERENCE MANIFEST file is generated from the difference
between the FULL_DISTRIBUTION releases:
        (OLD):  FULL_DISTRIBUTION.990412.1500
        (NEW):  FULL_DISTRIBUTION.990426.073615
        (DIFF): DIFF_DIST.990412.1500-990426.073615
The files that have been changed or added have been placed in the
DIFF_DIST.990412.1500-990426.073615 directory.


=====  Files found ONLY in the NEW Release  =========
 These files have been ADDED to the NEW distribution.
        NEW MD5                          FILE
-------------------------------------------------
 7c51db0c6ed8263c9d2a162f71d6e356  FULL_DISTRIBUTION.990426.073615/calsrc_use.html
 e8786a9cdc87e82959518c0d6fca1ec1  FULL_DISTRIBUTION.990426.073615/cmd_seq_list.html
 7eeb9190897b129b75028d91552b5046  FULL_DISTRIBUTION.990426.073615/flows/gifs/calsrc_use.gif
 36002f1336191b0ccfe14f1258e4814a  FULL_DISTRIBUTION.990426.073615/flows/gifs/hrcobs.gif
 584bf792061f7898b7036bb425ad2ef6  FULL_DISTRIBUTION.990426.073615/flows/gifs/i2s.gif
 2cd2ace0e41abfebe8183ce7341527cd  FULL_DISTRIBUTION.990426.073615/flows/gifs/off2i.gif
 4e0d84e050fedc6de03379e80df5ba1f  FULL_DISTRIBUTION.990426.073615/flows/gifs/off2s.gif
 d65d2fc83cd08f88c85b8259ae5409d4  FULL_DISTRIBUTION.990426.073615/flows/gifs/rad_zone_entry.gif
 1878b3f81684254f0185669977df6235  FULL_DISTRIBUTION.990426.073615/flows/gifs/rad_zone_exit.gif
 6375ddb1edb003f9c7c2b07fe9581914  FULL_DISTRIBUTION.990426.073615/flows/gifs/s2i.gif
 d0aa0247e6ffbe7187e2d508b00d214a  FULL_DISTRIBUTION.990426.073615/flows/gifs/scan_minusy.gif
 44b22228643fe6e8b2ad6dd020a387af  FULL_DISTRIBUTION.990426.073615/flows/gifs/scan_plusy.gif
 1dcbaf4f151cf5a4a621a44f9e69954c  FULL_DISTRIBUTION.990426.073615/hrcmode.html
 9885048c59b2aa7cf0127c9758141c29  FULL_DISTRIBUTION.990426.073615/hrcobs.html
 83ba64b2854c0e1dbb9210736254ec9e  FULL_DISTRIBUTION.990426.073615/i_to_s.html
 b4e2bfccd5d4ac0caafc7eab03f7dbd7  FULL_DISTRIBUTION.990426.073615/off_to_i.html
 b7f98a0315933cd1ae364fa2ca792bd4  FULL_DISTRIBUTION.990426.073615/off_to_s.html
 0cad30c59c320276dc65f084f9b807cb  FULL_DISTRIBUTION.990426.073615/rad_zone_entry.html
 8d6150472371ecdd46f80eaa01093733  FULL_DISTRIBUTION.990426.073615/rad_zone_exit.html
 33f95851bbed18315d29d1f273bcbc96  FULL_DISTRIBUTION.990426.073615/s_to_i.html
 32e0a908c64670b0a78fea471a6cee7d  FULL_DISTRIBUTION.990426.073615/scan_negy.html
 b39265f679acefef498c11c6ab06c79f  FULL_DISTRIBUTION.990426.073615/scan_posy.html
 9969c162a112953e2e42acf6b64fdf4e  FULL_DISTRIBUTION.990426.073615/sd_cmd_verif.html
 7838af06e24ad212a1b7cac1c849e009  FULL_DISTRIBUTION.990426.073615/sh1tosh2.html
 e80fe052deda690f847b19244dabed33  FULL_DISTRIBUTION.990426.073615/template.html


=====  Files found ONLY in the OLD Release  =========
These files have been DELETED in the NEW distribution
        NEW MD5                          FILE
-------------------------------------------------


===== Files that DIFFER in the OLD and NEW Release ======
 These Files that have been changed between the OLD and NEW Release
        NEW MD5                          FILE
-----------------------------------------------------------------------
 1092f2f889af10c7460a1425f9f81048  FULL_DISTRIBUTION.990426.073615/MANIFEST
 75c0829b23956f2f702bca35878e0968  FULL_DISTRIBUTION.990426.073615/flows/gifs/index.html
```

2-19-97 HRC IMAGER HV CODES and HSKP MONITORS

| V MCP low | CL | MON low | MON A/D CODE | V MCP upper | Cu | MON upper | MON A/D CODE |
|---|---|---|---|---|---|---|---|
| -12.5 | 14 | -0.571 | 120 | -9.8 | 3 | -0.121 | 126 |
| -32.5 | 15 | -0.612 | 120 | -29.8 | 4 | -0.162 | 125 |
| -52.5 | 16 | -0.653 | 119 | -49.8 | 5 | -0.202 | 125 |
| -72.5 | 17 | -0.694 | 119 | -69.8 | 6 | -0.243 | 124 |
| → -92.5 | 18 | -0.734 | 118 | -89.8 | 7 | -0.283 | 124 |
| -112.5 | 19 | -0.775 | 118 | -109.8 | 8 | -0.324 | 123 |
| -132.5 | 20 | -0.816 | 117 | -129.8 | 9 | -0.364 | 123 |
| -152.5 | 21 | -0.857 | 117 | -149.8 | 10 | -0.404 | 122 |
| -172.5 | 22 | -0.898 | 116 | -169.8 | 11 | -0.445 | 122 |
| -192.5 | 23 | -0.938 | 115 | -189.8 | 12 | -0.485 | 121 |
| -212.5 | 24 | -0.979 | 115 | -209.8 | 13 | -0.526 | 121 |
| -232.5 | 25 | -1.020 | 114 | -229.8 | 14 | -0.566 | 120 |
| -252.5 | 26 | -1.061 | 114 | -249.8 | 15 | -0.607 | 120 |
| -272.5 | 27 | -1.102 | 113 | -269.8 | 16 | -0.647 | 119 |
| -292.5 | 28 | -1.142 | 113 | -289.8 | 17 | -0.687 | 119 |
| -312.5 | 29 | -1.183 | 112 | -309.8 | 18 | -0.728 | 118 |
| -332.5 | 30 | -1.224 | 112 | -329.8 | 19 | -0.768 | 118 |
| -352.5 | 31 | -1.265 | 111 | -349.8 | 20 | -0.809 | 117 |
| -372.5 | 32 | -1.306 | 111 | -369.8 | 21 | -0.849 | 117 |
| -392.5 | 33 | -1.346 | 110 | -389.8 | 22 | -0.890 | 116 |
| -412.5 | 34 | -1.387 | 110 | -409.8 | 23 | -0.930 | 116 |
| -432.5 | 35 | -1.428 | 109 | -429.8 | 24 | -0.971 | 115 |
| -452.5 | 36 | -1.469 | 109 | -449.8 | 25 | -1.011 | 115 |
| -472.5 | 37 | -1.510 | 108 | -469.8 | 26 | -1.051 | 114 |
| -492.5 | 38 | -1.550 | 108 | -489.8 | 27 | -1.092 | 114 |
| -512.5 | 39 | -1.591 | 107 | -509.8 | 28 | -1.132 | 113 |
| -532.5 | 40 | -1.632 | 107 | -529.8 | 29 | -1.173 | 112 |
| -552.5 | 41 | -1.673 | 106 | -549.8 | 30 | -1.213 | 112 |
| -572.5 | 42 | -1.714 | 106 | -569.8 | 31 | -1.254 | 111 |
| -592.5 | 43 | -1.754 | 105 | -589.8 | 32 | -1.294 | 111 |
| -612.5 | 44 | -1.795 | 105 | -609.8 | 33 | -1.334 | 110 |
| -632.5 | 45 | -1.836 | 104 | -629.8 | 34 | -1.375 | 110 |
| -652.5 | 46 | -1.877 | 103 | -649.8 | 35 | -1.415 | 109 |
| -672.5 | 47 | -1.918 | 103 | -669.8 | 36 | -1.456 | 109 |
| -692.5 | 48 | -1.958 | 102 | -689.8 | 37 | -1.496 | 108 |
| -712.5 | 49 | -1.999 | 102 | -709.8 | 38 | -1.537 | 108 |
| -732.5 | 50 | -2.040 | 101 | -729.8 | 39 | -1.577 | 107 |
| -752.5 | 51 | -2.081 | 101 | -749.8 | 40 | -1.618 | 107 |
| -772.5 | 52 | -2.122 | 100 | -769.8 | 41 | -1.658 | 106 |
| -792.5 | 53 | -2.163 | 100 | -789.8 | 42 | -1.698 | 106 |
| -812.5 | 54 | -2.203 | 99 | -809.8 | 43 | -1.739 | 105 |
| -832.5 | 55 | -2.244 | 99 | -829.8 | 44 | -1.779 | 105 |
| -852.5 | 56 | -2.285 | 98 | -849.8 | 45 | -1.820 | 104 |
| -872.5 | 57 | -2.326 | 98 | -869.8 | 46 | -1.860 | 104 |
| -892.5 | 58 | -2.367 | 97 | -889.8 | 47 | -1.901 | 103 |
| -912.5 | 59 | -2.407 | 97 | -909.8 | 48 | -1.941 | 103 |
| -932.5 | 60 | -2.448 | 96 | -929.8 | 49 | -1.981 | 102 |
| -952.5 | 61 | -2.489 | 96 | -949.8 | 50 | -2.022 | 102 |
| -972.5 | 62 | -2.530 | 95 | -969.8 | 51 | -2.062 | 101 |
| -992.5 | 63 | -2.571 | 95 | -989.8 | 52 | -2.103 | 101 |
| -1012.5 | 64 | -2.611 | 94 | -1009.8 | 53 | -2.143 | 100 |
| -1032.5 | 65 | -2.652 | 94 | -1029.8 | 54 | -2.184 | 100 |
| -1052.5 | 66 | -2.693 | 93 | -1049.8 | 55 | -2.224 | 99 |
| -1072.5 | 67 | -2.734 | 93 | -1069.8 | 56 | -2.265 | 99 |
| -1092.5 | 68 | -2.775 | 92 | -1089.8 | 57 | -2.305 | 98 |
| -1112.5 | 69 | -2.815 | 91 | -1109.8 | 58 | -2.345 | 97 |

SPECTROSCOPY HV CODES and HSKP MONITORS

| V MCP low | CL | MON low | MON A/D CODE | V MCP upper | Cu | MON upper | MON A/D CODE |
|---|---|---|---|---|---|---|---|
| 0.4 | 14 | -0.570 | 120 | 9.0 | 3 | -0.121 | 126 |
| -19.6 | 15 | -0.610 | 120 | -11.0 | 4 | -0.162 | 125 |
| -39.6 | 16 | -0.651 | 119 | -31.0 | 5 | -0.202 | 125 |
| -59.6 | 17 | -0.692 | 119 | -51.0 | 6 | -0.243 | 124 |
| -79.6 | 18 | -0.732 | 118 | -71.0 | 7 | -0.283 | 124 |
| → -99.6 | 19 | -0.773 | 118 | -91.0 | 8 | -0.324 | 123 |
| -119.6 | 20 | -0.814 | 117 | -111.0 | 9 | -0.364 | 123 |
| -139.6 | 21 | -0.854 | 117 | -131.0 | 10 | -0.405 | 122 |
| -159.6 | 22 | -0.895 | 116 | -151.0 | 11 | -0.445 | 122 |
| -179.6 | 23 | -0.936 | 116 | -171.0 | 12 | -0.486 | 121 |
| -199.6 | 24 | -0.977 | 115 | -191.0 | 13 | -0.526 | 121 |
| -219.6 | 25 | -1.017 | 114 | -211.0 | 14 | -0.567 | 120 |
| -239.6 | 26 | -1.058 | 114 | -231.0 | 15 | -0.607 | 120 |
| -259.6 | 27 | -1.099 | 113 | -251.0 | 16 | -0.648 | 119 |
| -279.6 | 28 | -1.139 | 113 | -271.0 | 17 | -0.688 | 119 |
| -299.6 | 29 | -1.180 | 112 | -291.0 | 18 | -0.729 | 118 |
| -319.6 | 30 | -1.221 | 112 | -311.0 | 19 | -0.769 | 118 |
| -339.6 | 31 | -1.261 | 111 | -331.0 | 20 | -0.810 | 117 |
| -359.6 | 32 | -1.302 | 111 | -351.0 | 21 | -0.850 | 117 |
| -379.6 | 33 | -1.343 | 110 | -371.0 | 22 | -0.891 | 116 |
| -399.6 | 34 | -1.383 | 110 | -391.0 | 23 | -0.931 | 116 |
| -419.6 | 35 | -1.424 | 109 | -411.0 | 24 | -0.972 | 115 |
| -439.6 | 36 | -1.465 | 109 | -431.0 | 25 | -1.012 | 115 |
| -459.6 | 37 | -1.505 | 108 | -451.0 | 26 | -1.053 | 114 |
| -479.6 | 38 | -1.546 | 108 | -471.0 | 27 | -1.093 | 114 |
| -499.6 | 39 | -1.587 | 107 | -491.0 | 28 | -1.134 | 113 |
| -519.6 | 40 | -1.628 | 107 | -511.0 | 29 | -1.174 | 112 |
| -539.6 | 41 | -1.668 | 106 | -531.0 | 30 | -1.215 | 112 |
| -559.6 | 42 | -1.709 | 106 | -551.0 | 31 | -1.255 | 111 |
| -579.6 | 43 | -1.750 | 105 | -571.0 | 32 | -1.296 | 111 |
| -599.6 | 44 | -1.790 | 105 | -591.0 | 33 | -1.336 | 110 |
| -619.6 | 45 | -1.831 | 104 | -611.0 | 34 | -1.377 | 110 |
| -639.6 | 46 | -1.872 | 104 | -631.0 | 35 | -1.417 | 109 |
| -659.6 | 47 | -1.912 | 103 | -651.0 | 36 | -1.458 | 109 |
| -679.6 | 48 | -1.953 | 102 | -671.0 | 37 | -1.498 | 108 |
| -699.6 | 49 | -1.994 | 102 | -691.0 | 38 | -1.539 | 108 |
| -719.6 | 50 | -2.034 | 101 | -711.0 | 39 | -1.579 | 107 |
| -739.6 | 51 | -2.075 | 101 | -731.0 | 40 | -1.620 | 107 |
| -759.6 | 52 | -2.116 | 100 | -751.0 | 41 | -1.660 | 106 |
| -779.6 | 53 | -2.156 | 100 | -771.0 | 42 | -1.701 | 106 |
| -799.6 | 54 | -2.197 | 99 | -791.0 | 43 | -1.741 | 105 |
| -819.6 | 55 | -2.238 | 99 | -811.0 | 44 | -1.782 | 105 |
| -839.6 | 56 | -2.279 | 98 | -831.0 | 45 | -1.822 | 104 |
| -859.6 | 57 | -2.319 | 98 | -851.0 | 46 | -1.863 | 104 |
| -879.6 | 58 | -2.360 | 97 | -871.0 | 47 | -1.903 | 103 |
| -899.6 | 59 | -2.401 | 97 | -891.0 | 48 | -1.943 | 103 |
| -919.6 | 60 | -2.441 | 96 | -911.0 | 49 | -1.984 | 102 |
| -939.6 | 61 | -2.482 | 96 | -931.0 | 50 | -2.024 | 102 |
| -959.6 | 62 | -2.523 | 95 | -951.0 | 51 | -2.065 | 101 |
| -979.6 | 63 | -2.563 | 95 | -971.0 | 52 | -2.105 | 101 |
| -999.6 | 64 | -2.604 | 94 | -991.0 | 53 | -2.146 | 100 |
| -1019.6 | 65 | -2.645 | 94 | -1011.0 | 54 | -2.186 | 100 |
| -1039.6 | 66 | -2.685 | 93 | -1031.0 | 55 | -2.227 | 99 |
| -1059.6 | 67 | -2.726 | 93 | -1051.0 | 56 | -2.267 | 98 |
| -1079.6 | 68 | -2.767 | 92 | -1071.0 | 57 | -2.308 | 98 |
| -1099.6 | 69 | -2.807 | 92 | -1091.0 | 58 | -2.348 | 97 |

* FLIGHT VALUES IN RED

2-1 H MAG V C ar KP TOR

| V MCP low | CL | MON low | MON A/D CODE | V MCP upper | Cu | MON upper | MON A/D CODE |
|---|---|---|---|---|---|---|---|
| -1132.5 | 70 | -2.856 | 91 | -1129.8 | 59 | -2.386 | 97 |
| -1152.5 | 71 | -2.897 | 90 | -1149.8 | 60 | -2.426 | 96 |
| -1172.5 | 72 | -2.938 | 90 | -1169.8 | 61 | -2.467 | 96 |
| -1192.5 | 73 | -2.979 | 89 | -1189.8 | 62 | -2.507 | 95 |
| -1212.5 | 74 | -3.019 | 89 | -1209.8 | 63 | -2.548 | 95 |
| -1232.5 | 75 | -3.060 | 88 | -1229.8 | 64 | -2.588 | 94 |
| -1252.5 | 76 | -3.101 | 88 | -1249.8 | 65 | -2.628 | 94 |
| -1272.5 | 77 | -3.142 | 87 | -1269.8 | 66 | -2.669 | 93 |
| -1292.5 | 78 | -3.183 | 87 | -1289.8 | 67 | -2.709 | 93 |
| -1312.5 | 79 | -3.223 | 86 | -1309.8 | 68 | -2.750 | 92 |
| -1332.5 | 80 | -3.264 | 86 | -1329.8 | 69 | -2.790 | 92 |
| -1352.5 | 81 | -3.305 | 85 | -1349.8 | 70 | -2.831 | 91 |
| -1372.5 | 82 | -3.346 | 85 | -1369.8 | 71 | -2.871 | 91 |
| -1392.5 | 83 | -3.387 | 84 | -1389.8 | 72 | -2.912 | 90 |
| -1412.5 | 84 | -3.427 | 84 | -1409.8 | 73 | -2.952 | 90 |
| -1432.5 | 85 | -3.468 | 83 | -1429.8 | 74 | -2.992 | 89 |
| -1452.5 | 86 | -3.509 | 83 | -1449.8 | 75 | -3.033 | 89 |
| -1472.5 | 87 | -3.550 | 82 | -1469.8 | 76 | -3.073 | 88 |
| -1492.5 | 88 | -3.591 | 82 | -1489.8 | 77 | -3.114 | 88 |
| -1512.5 | 89 | -3.631 | 81 | -1509.8 | 78 | -3.154 | 87 |
| -1532.5 | 90 | -3.672 | 80 | -1529.8 | 79 | -3.195 | 87 |
| -1552.5 | 91 | -3.713 | 80 | -1549.8 | 80 | -3.235 | 86 |
| -1572.5 | 92 | -3.754 | 79 | -1569.8 | 81 | -3.275 | 86 |
| -1592.5 | 93 | -3.795 | 79 | -1589.8 | 82 | -3.316 | 85 |
| -1612.5 | 94 | -3.835 | 78 | -1609.8 | 83 | -3.356 | 85 |
| -1632.5 | 95 | -3.876 | 78 | -1629.8 | 84 | -3.397 | 84 |
| -1652.5 | 96 | -3.917 | 77 | -1649.8 | 85 | -3.437 | 83 |
| -1672.5 | 97 | -3.958 | 77 | -1669.8 | 86 | -3.478 | 83 |
| -1692.5 | 98 | -3.999 | 76 | -1689.8 | 87 | -3.518 | 82 |
| -1712.5 | 99 | -4.039 | 76 | -1709.8 | 88 | -3.559 | 82 |
| -1732.5 | 100 | -4.080 | 75 | -1729.8 | 89 | -3.599 | 81 |
| -1752.5 | 101 | -4.121 | 75 | -1749.8 | 90 | -3.639 | 81 |
| -1772.5 | 102 | -4.162 | 74 | -1769.8 | 91 | -3.680 | 80 |
| -1792.5 | 103 | -4.203 | 74 | -1789.8 | 92 | -3.720 | 80 |
| -1812.5 | 104 | -4.243 | 73 | -1809.8 | 93 | -3.761 | 79 |
| -1832.5 | 105 | -4.284 | 73 | -1829.8 | 94 | -3.801 | 79 |
| -1852.5 | 106 | -4.325 | 72 | -1849.8 | 95 | -3.842 | 78 |
| -1872.5 | 107 | -4.366 | 72 | -1869.8 | 96 | -3.882 | 78 |
| -1892.5 | 108 | -4.407 | 71 | -1889.8 | 97 | -3.922 | 77 |
| -1912.5 | 109 | -4.447 | 71 | -1909.8 | 98 | -3.963 | 77 |
| -1932.5 | 110 | -4.488 | 70 | -1929.8 | 99 | -4.003 | 76 |
| -1952.5 | 111 | -4.529 | 70 | -1949.8 | 100 | -4.044 | 76 |
| -1972.5 | 112 | -4.570 | 69 | -1969.8 | 101 | -4.084 | 75 |
| -1992.5 | 113 | -4.611 | 68 | -1989.8 | 102 | -4.125 | 75 |
| -2012.5 | 114 | -4.651 | 68 | -2009.8 | 103 | -4.165 | 74 |
| -2032.5 | 115 | -4.692 | 67 | -2029.8 | 104 | -4.206 | 74 |
| -2052.5 | 116 | -4.733 | 67 | -2049.8 | 105 | -4.246 | 73 |
| -2072.5 | 117 | -4.774 | 66 | -2069.8 | 106 | -4.286 | 73 |
| -2092.5 | 118 | -4.815 | 66 | -2089.8 | 107 | -4.327 | 72 |
| -2112.5 | 119 | -4.855 | 65 | -2109.8 | 108 | -4.367 | 72 |
| -2132.5 | 120 | -4.896 | 65 | -2129.8 | 109 | -4.408 | 71 |
| -2152.5 | 121 | -4.937 | 64 | -2149.8 | 110 | -4.448 | 71 |
| -2172.5 | 122 | -4.978 | 64 | -2169.8 | 111 | -4.489 | 70 |
| -2192.5 | 123 | -5.019 | 63 | -2189.8 | 112 | -4.529 | 70 |
| -2212.5 | 124 | -5.059 | 63 | -2209.8 | 113 | -4.569 | 69 |
| -2232.5 | 125 | -5.100 | 62 | -2229.8 | 114 | -4.610 | 68 |
| -2252.5 | 126 | -5.141 | 62 | -2249.8 | 115 | -4.650 | 68 |
| -2272.5 | 127 | -5.182 | 61 | -2269.8 | 116 | -4.691 | 67 |

CTRO PY I JODES and HSKP MONITORS

| V MCP low | CL | MON low | MON A/D CODE | V MCP upper | Cu | MON upper | MON A/D CODE |
|---|---|---|---|---|---|---|---|
| -1119.6 | 70 | -2.848 | 91 | -1111.0 | 59 | -2.389 | 97 |
| -1139.6 | 71 | -2.889 | 91 | -1131.0 | 60 | -2.429 | 96 |
| -1159.6 | 72 | -2.930 | 90 | -1151.0 | 61 | -2.470 | 96 |
| -1179.6 | 73 | -2.970 | 89 | -1171.0 | 62 | -2.510 | 95 |
| -1199.6 | 74 | -3.011 | 89 | -1191.0 | 63 | -2.551 | 95 |
| -1219.6 | 75 | -3.052 | 88 | -1211.0 | 64 | -2.591 | 94 |
| -1239.6 | 76 | -3.092 | 88 | -1231.0 | 65 | -2.632 | 94 |
| -1259.6 | 77 | -3.133 | 87 | -1251.0 | 66 | -2.672 | 93 |
| -1279.6 | 78 | -3.174 | 87 | -1271.0 | 67 | -2.713 | 93 |
| -1299.6 | 79 | -3.214 | 86 | -1291.0 | 68 | -2.753 | 92 |
| -1319.6 | 80 | -3.255 | 86 | -1311.0 | 69 | -2.794 | 92 |
| -1339.6 | 81 | -3.296 | 85 | -1331.0 | 70 | -2.834 | 91 |
| -1359.6 | 82 | -3.336 | 85 | -1351.0 | 71 | -2.875 | 91 |
| -1379.6 | 83 | -3.377 | 84 | -1371.0 | 72 | -2.915 | 90 |
| -1399.6 | 84 | -3.418 | 84 | -1391.0 | 73 | -2.956 | 90 |
| -1419.6 | 85 | -3.458 | 83 | -1411.0 | 74 | -2.996 | 89 |
| -1439.6 | 86 | -3.499 | 83 | -1431.0 | 75 | -3.037 | 89 |
| -1459.6 | 87 | -3.540 | 82 | -1451.0 | 76 | -3.077 | 88 |
| -1479.6 | 88 | -3.581 | 82 | -1471.0 | 77 | -3.118 | 88 |
| -1499.6 | 89 | -3.621 | 81 | -1491.0 | 78 | -3.158 | 87 |
| -1519.6 | 90 | -3.662 | 81 | -1511.0 | 79 | -3.199 | 87 |
| -1539.6 | 91 | -3.703 | 80 | -1531.0 | 80 | -3.239 | 86 |
| -1559.6 | 92 | -3.743 | 80 | -1551.0 | 81 | -3.280 | 86 |
| -1579.6 | 93 | -3.784 | 79 | -1571.0 | 82 | -3.320 | 85 |
| -1599.6 | 94 | -3.825 | 79 | -1591.0 | 83 | -3.361 | 84 |
| -1619.6 | 95 | -3.865 | 78 | -1611.0 | 84 | -3.401 | 84 |
| -1639.6 | 96 | -3.906 | 77 | -1631.0 | 85 | -3.442 | 83 |
| -1659.6 | 97 | -3.947 | 77 | -1651.0 | 86 | -3.482 | 83 |
| -1679.6 | 98 | -3.987 | 76 | -1671.0 | 87 | -3.523 | 82 |
| -1699.6 | 99 | -4.028 | 76 | -1691.0 | 88 | -3.563 | 82 |
| -1719.6 | 100 | -4.069 | 75 | -1711.0 | 89 | -3.604 | 81 |
| -1739.6 | 101 | -4.109 | 75 | -1731.0 | 90 | -3.644 | 81 |
| -1759.6 | 102 | -4.150 | 74 | -1751.0 | 91 | -3.685 | 80 |
| -1779.6 | 103 | -4.191 | 74 | -1771.0 | 92 | -3.725 | 80 |
| -1799.6 | 104 | -4.232 | 73 | -1791.0 | 93 | -3.766 | 79 |
| -1819.6 | 105 | -4.272 | 73 | -1811.0 | 94 | -3.806 | 79 |
| -1839.6 | 106 | -4.313 | 72 | -1831.0 | 95 | -3.847 | 78 |
| -1859.6 | 107 | -4.354 | 72 | -1851.0 | 96 | -3.887 | 78 |
| -1879.6 | 108 | -4.394 | 71 | -1871.0 | 97 | -3.927 | 77 |
| -1899.6 | 109 | -4.435 | 71 | -1891.0 | 98 | -3.968 | 77 |
| -1919.6 | 110 | -4.476 | 70 | -1911.0 | 99 | -4.008 | 76 |
| -1939.6 | 111 | -4.516 | 70 | -1931.0 | 100 | -4.049 | 76 |
| -1959.6 | 112 | -4.557 | 69 | -1951.0 | 101 | -4.089 | 75 |
| -1979.6 | 113 | -4.598 | 69 | -1971.0 | 102 | -4.130 | 75 |
| -1999.6 | 114 | -4.638 | 68 | -1991.0 | 103 | -4.170 | 74 |
| -2019.6 | 115 | -4.679 | 68 | -2011.0 | 104 | -4.211 | 74 |
| -2039.6 | 116 | -4.720 | 67 | -2031.0 | 105 | -4.251 | 73 |
| -2059.6 | 117 | -4.760 | 67 | -2051.0 | 106 | -4.292 | 73 |
| -2079.6 | 118 | -4.801 | 66 | -2071.0 | 107 | -4.332 | 72 |
| -2099.6 | 119 | -4.842 | 66 | -2091.0 | 108 | -4.373 | 72 |
| -2119.6 | 120 | -4.883 | 65 | -2111.0 | 109 | -4.413 | 71 |
| -2139.6 | 121 | -4.923 | 64 | -2131.0 | 110 | -4.454 | 70 |
| -2159.6 | 122 | -4.964 | 64 | -2151.0 | 111 | -4.494 | 70 |
| -2179.6 | 123 | -5.005 | 63 | -2171.0 | 112 | -4.535 | 69 |
| -2199.6 | 124 | -5.045 | 63 | -2191.0 | 113 | -4.575 | 69 |
| -2219.6 | 125 | -5.086 | 62 | -2211.0 | 114 | -4.616 | 68 |
| -2239.6 | 126 | -5.127 | 62 | -2231.0 | 115 | -4.656 | 68 |
| -2259.6 | 127 | -5.167 | 61 | -2251.0 | 116 | -4.697 | 67 |

4/24/97

PMT HVPS S/N 01

| CODE | DYNODE VOLTS | MONITOR VOLTS | A/D MONITOR CODE |
|---|---|---|---|
| 0 | 1500 | -3.046 | 89 |
| 1 | 1525 | -3.096 | 88 |
| 2 | 1550 | -3.146 | 87 |
| 3 | 1575 | -3.196 | 87 |
| 4 | 1600 | -3.245 | 86 |
| 5 | 1625 | -3.295 | 85 |
| 6 | 1650 | -3.345 | 85 |
| 7 | 1675 | -3.395 | 84 |
| 8 | 1700 | -3.445 | 83 |
| 9 | 1725 | -3.495 | 83 |
| 10 | 1750 | -3.545 | 82 |
| 11 | 1775 | -3.595 | 81 |
| 12 | 1800 | -3.644 | 81 |
| 13 | 1825 | -3.694 | 80 |
| 14 | 1850 | -3.744 | 80 |
| 15 | 1875 | -3.794 | 79 |

PMT HVPS S/N 02

| CODE | DYNODE VOLTS | MONITOR VOLTS | A/D MONITOR CODE |
|---|---|---|---|
| 0 | 1500 | -3.039 | 89 |
| 1 | 1525 | -3.089 | 88 |
| 2 | 1550 | -3.139 | 87 |
| 3 | 1575 | -3.189 | 87 |
| 4 | 1600 | -3.239 | 86 |
| 5 | 1625 | -3.289 | 85 |
| 6 | 1650 | -3.339 | 85 |
| 7 | 1675 | -3.389 | 84 |
| 8 | 1700 | -3.439 | 83 |
| 9 | 1725 | -3.489 | 83 |
| 10 | 1750 | -3.539 | 82 |
| 11 | 1775 | -3.589 | 82 |
| 12 | 1800 | -3.639 | 81 |
| 13 | 1825 | -3.689 | 80 |
| 14 | 1850 | -3.739 | 80 |
| 15 | 1875 | -3.789 | 79 |

TVHVSTEP 23 MAY 98

# HIGH VOLTAGE STEPS FOR T/V TESTING

## HRC-I

| Voltage | Top MCP | Monitor | Bottom MCP | Monitor |
|---|---|---|---|---|
| -250 | 15 | 120 | 26 | 114 |
| -300 | 17 | 119 | 28 | 113 |
| -350 | 20 | 117 | 31 | 111 |
| -400 | 22 | 116 | 33 | 110 |
| -450 | 25 | 115 | 36 | 109 |
| -500 | 27 | 114 | 38 ~~39~~ | 107 ~~108~~ |

## HRC-S

| Voltage | Top MCP | Monitor | Bottom MCP | Monitor |
|---|---|---|---|---|
| -250 | 16 | 119 | 27 | 113 |
| -300 | 18 | 118 | 29 | 112 |
| -350 | 21 | 117 | 32 | 111 |
| -400 | 23 | 116 | 34 | 110 |
| -450 | 26 | 114 | 37 | 108 |
| -500 | 28 | 113 | 39 | 107 |

MCP HVPS COMMANDING

There are two adjustable supplies, called upper and lower. They are summed to produce the highest voltage V2.

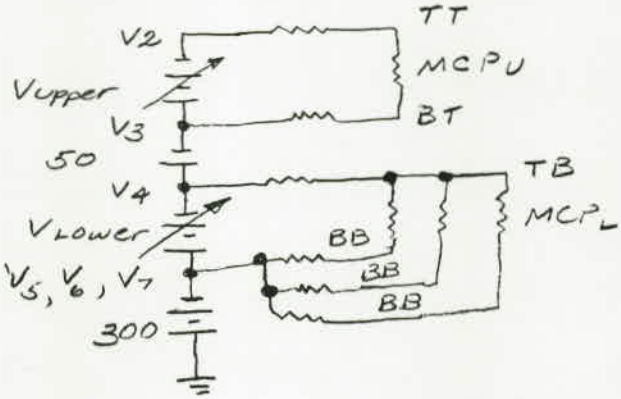


CODE UPPER = $C_U$

CODE LOWER = $C_L$

$V_{upper} = C_U \times 20 - 50$ $\qquad$ $V3 = V4 + 50$

$V_{Lower} = C_L \times 20 - 300$

$V2 = C_U \times 20 + 50 + C_L \times 20 + 300 = (C_U + C_L) \times 20 + 350$

$V4 = C_L \times 20 + 300$

There are 7 code bits weighted 20 V/bit

There are filter resistances which cause drops in voltages applied to the MCP's. There are errors in the bits which can be as high as 35 V.

The general formulas without corrections for errors and filter voltage drops are: ...

$C_L = 0.05(V_{MCPL}) + 15$ $\qquad$ $V_{MCPL} = (C_L - 15)\,20$

$C_U = 0.05(V_{MCPU}) + 2.5$ $\qquad$ $V_{MCPU} = (C_U - 2.5)\,20$

Since $V_{MCPL} = V_{MCPU}$

$C_L - 15 = C_U - 2.5$ $\qquad$ $C_L = C_U + 12.5$ $\qquad$ $C_U = C_L - 12.5$

The starting codes for equal MCP voltages are tabulated as follows:

| MCPV | CL | CU | MCPV | CL | CU |
|---|---|---|---|---|---|
| 1400 | 85 | 72.5 | 1410 | 85.5 | 73 |
| 1420 | 86 | 73.5 | 1430 | 86.5 | 74 |
| 1440 | 87 | 74.5 | 1450 | 87.5 | 75 |
| 1460 | 88 | 75.5 | 1470 | 88.5 | 76 |
| 1480 | 89 | 76.5 | 1490 | 89.5 | 77 |
| 1500 | 90 | 77.5 | 1510 | 90.5 | 78 |
| 1520 | 91 | 78.5 | 1530 | 91.5 | 79 |
| 1540 | 92 | 79.5 | 1550 | 92.5 | 80 |

IMAGER MCPV'S CORRECTED FOR CODE BIT ERRORS & FILTER R':

| $MCPV_L$ | CL | CU | $MCPV_U$ |
|---|---|---|---|
| 1512.5 | 89 | 78 | 1509.8 |

| | | | | | |
|---|---|---|---|---|---|
| 1700 | 100 | 87.5 | 1710 | 100.5 | 88 |
| 1720 | 101 | 88.5 | 1730 | 101.5 | 89 |
| 1740 | 102 | 89.5 | 1750 | 102.5 | 90 |
| 1760 | 103 | 90.5 | 1770 | 103.5 | 91 |
| 1780 | 104 | 91.5 | 1790 | 104.5 | 92 |
| 1800 | 105 | 92.5 | 1810 | 105.5 | 93 |
| 1820 | 106 | 93.5 | 1830 | 106.5 | 94 |

SPECTROSCOPY MCPV'S CORRECTED FOR CODE BIT ERRORS & FILTER R'S.

| $MCPV_L$ | CL | CU | $MCPV_U$ |
|---|---|---|---|
| 1779.6 | 103 | 92 | 1771 |

| | | | corrected VMCP |
|---|---|---|---|
| | Imager | | |
| $V_{upper}$ | = 1510 | $C_U$ = 78 | 1509.8 |
| $V_{Lower}$ | = 1480 | $C_L$ = 89 | 1512.5 |
| | Spectroscopy | | |
| $V_{upper}$ | = 1790 | $C_U$ = 92 | 1771 |
| $V_{Lower}$ | = 1760 | $C_L$ = 103 | 1779.6 |

# Imager High Voltage Settings

From Lab Supply Data

| Top MCP | Bot MCP | Lab Supply Volts Across MCP's |
|---|---|---|
| 80 MΩ | 61 MΩ | 1525 V |

| V2 | V3 | V4 | V6 |
|---|---|---|---|
| -3400 | -1875 | -1825 | -300 |

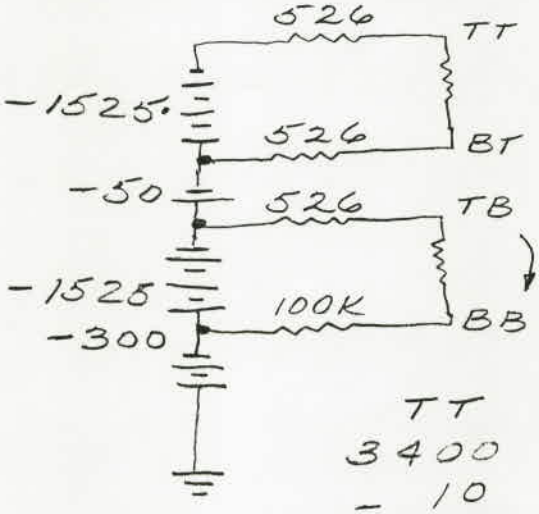


$I_T = \frac{1525}{80M} = 19.06\mu A$

$I_B = \frac{1525}{61M} = 25\mu A$

| TT | BT | TB | BB |
|---|---|---|---|
| 3400 | 1875 | 1825 | 300 |
| − 10 | +10 | −13 | + 2.5 |
| 3390 | 1885 | 1812 | 302.5 |

MCP TOP = 1505 V  MCP BOT = 1509.5

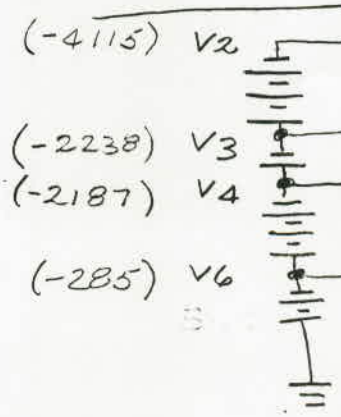


MEASURED

TT = 4110

BT = 2241

TB = 2186

BB = 284

CALC

V2 = 4115 − 4.8 = 4110.2

2238 + 2.3 = 2240.3

2187 − 2.3 = 2184.7

284 + 1.9 = 285.9

Error Voltages for the Imager HVPS

$V_2 = +35\ V$ MCP TOP = 1505V } calc

$V_3 = +28V$ MCP BOT = 1509.5V }

$V_4 = +23\ V$

$V_6 = -15\ V$

Theoretical

CODE MCP LOW = 0.05 (MCPV) + 15

CODE MCP TOP = 0.05 (MCPV) + 2.5

MCPV = 1507.25

CODE LOW = 0.05 (1507.25) + 15 = 75.4 + 15

= 90.36

CODE TOP = 75.4 + 2.5 = 77.9

$V_{UP} = 1800$

$V_2 = 1560 + 1800 = 3360$

$TT = \overset{V2}{3360} + \overset{e}{35} - \overset{d}{4.9} = 3390.1$ 1509.8

$BT = 1850 + 28 + 2.31 = 1880.3$

$TB = \overset{V4}{1800} + \overset{e}{23} - \overset{d}{3.05} = 1819.95$ 1532.5

$BB = 300 - 15 + 2.5 = 297.5$

$$\begin{array}{r} 3360 \\ -1850 \\ \hline 1510 \end{array} \qquad \begin{array}{r} 1800 \\ -300 \\ \hline 1500 \end{array}$$

CODE TOP = 78
CODE BOT = 89

$V_2 = 1780 + 1560 = 3340$

$V_4 = 1780$

$TT = 3340 + 35 - 4.9 = 3370.1$ MCPV 1509.8

$BT = 1780 + 50 + 28 + 2.31 = 1860.3$

$TB = 1780 + 23 - 3.05 = 1800$ MCPV 1512.5

$BB = 300 - 15 + 2.5 = 287.5$

IMAGER HV CODES

UPPER SUPPLY CODE = 78 1509.8 V UPPER PLATE

LOWER SUPPLY CODE = 89 1512.5 V LOWER PLATE

# Spectroscopy High Voltage Settings

From Lab Supply Data

| TOP MCP | BOT MCP | Lab Supply Volts Across MCP's |
|---|---|---|
| 26.85MΩ | 45.62MΩ | 1825 V |

| V2 | V3 | V4 | V5,6,7 |
|---|---|---|---|
| -4000 | -2175 | -2125 | -300 |

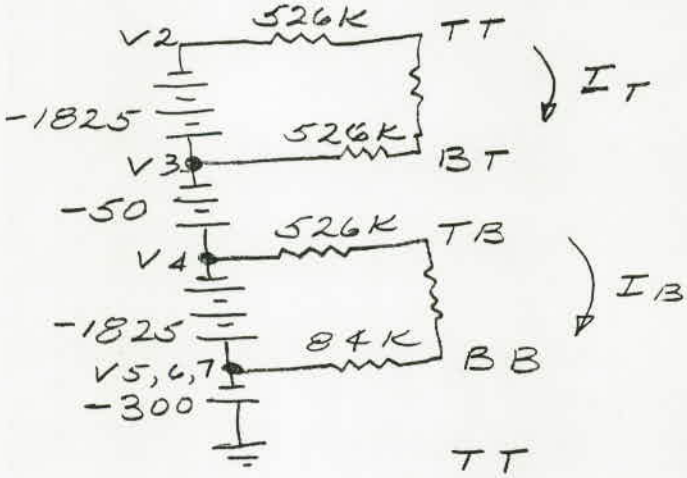


$$I_T = \frac{1825}{26.85M} = 68\,\mu A$$

$$I_B = \frac{1825}{45.62M} = 40\,\mu A$$

| TT | BT | TB | BB |
|---|---|---|---|
| 4000 | 2175 | 2125 | 300 |
| - 35.8 | +35.8 | -21 | 3.4 |
| 3964.2 | 2210.8 | 2104 | 303.4 |

MCP TOP = 1753.4

MCP BOT = 1800.6

---

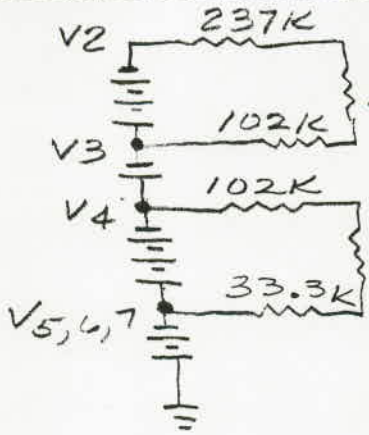


$$I_T = \frac{1843}{20M} = 92\,\mu A$$

$$I_B = \frac{1879}{20M} = 94\,\mu A$$

Measured

TT = 4093

BT = 2250

TB = 2177

BB = 305

MCP TOP = 1843

MCP BOT = 1872

| | CALC | | | | Meas |
|---|---|---|---|---|---|
| TT | = 4080 | + 35 (e) | − 21.8 (d) | = 4093.2 | 4093 |
| BT | = 2210 | + 31 (e) | + 9.38 (d) | = 2250.4 | 2250 |
| TB | = 2160 | + 27 (e) | + 9.58 (d) | = 2177.4 | 2177 |
| BB | = 300 | + 2 (e) | + 3.1 (d) | = 305.1 | 305 |

| | MEAS | THEURET | Error |
|---|---|---|---|
| $V_2$ | 4115 | 4080 | 35 |
| $V_3$ | 2241 | 2210 | 31 |
| $V_4$ | 2187 | 2160 | 27 |
| $V_5, V_6, V_7$ | 302 | 300 | 2 |

$4093 - 4080 = 13 \cong 35 - 21.8$

$2250 - 2210 = 40 \cong 31 + 9.38$

$2177 - 2160 = 17 \cong 27 - 9.58$

$305 - 300 = 5 \cong 2 + 3.1$

---

Spectruscopy MCPV Ave $= (1753.4 + 1800.6)/2 = 1777$

CODE TOP $= 0.05\,(MCPV) + 2.5 = 91.35$ $\quad I_T = 68\,\mu A$

CODE BOT $= 0.05\,(MCPV) + 15 = 103.85$ $\quad I_B = 40\,\mu A$

$V_{up} = 1820$ $\quad I_T \times 237^K = 16.1\,V$ $\quad I_T \times 102^K = 6.9$

$V_4 = 2080$ $\quad I_B \times 102 = 4.1\,V$ $\quad I_T \times 33.3^K = 1.33$

$V_2 = 2080 + 1820 = 3900$

$TT = 3900^{V_2} + 35 - 16.1 = 3918.9$

$BT = 2080 + 50 + 31 + 6.9 = 2167.9$

$TB = 2080 + 27 - 4.1 = 2102.9$

$BB = 300 + 2 + 1.3 = 303.3$

MCPV

(1751)

(1799.6)

Code change

Code top = 91+1 = 92

Code bot = 104-1 = 103

$V_{up}$ = 1840

$V_4$ = 2060 $V_2$ = 2060+1840 = 3900 MCPV

TT = 3900+35-16.1 = 3918.9 (1771) TOP

BT = 2060+50+31+6.9 = 2147.9

TB = 2060+27-4.1 = 2082.9 (1779.6) BOT

BB = 300+2+1.3 = 303.3

SPECTROSCOPY HV CODES

UPPER SUPPLY CODE = 92 1771 V upper plate

LOWER SUPPLY CODE = 103 1779.6 V lower plate

Organization:


**Smithsonian Astrophysical Observatory**

60 Garden St.
Cambridge MA, 02310


Program/Project:

**Chandra**

**High Resolution Camera**

Title:

# CHAPTER

# HRC Motors

| | | | |
|---|---|---|---|
| **Project** | HRC | **Start Date:Time:** | |
| **Document Type** | Scanned Document | **End Date:Time:** | |
| **File** | hrc.poc.proc.ops.tex | **Test Conductor:** | |
| **Revision** | *Rev* | | |
| **Prepared By** | | | |
| **Make Date** | January 17, 2013 | | |

Document Configuration Management Information:

| HRC VERIFICATION SUMMARY REPORT | SAO No.: HRC-ACPT-014 |
|---|---|

**SPECIFICATION:** HRC CEI Specification

**REQUIREMENT NO./TITLE:** 3.2.2.7 SI Induced Disturbances (VRSD 4.1.2.5)

**REQUIREMENT STATEMENT:** HRC should have no continuous disturbance generators. Ref OBSV-to-SI ICD, 3.4.2.1

**VERIFICATION METHOD:** ANALYSIS

**PROCEDURE NO.:** N/A

**CONFIGURATION:**

**CYCLE TIME:**

**VERIFICATION DISCUSSION/RESULTS:**

Note: This CEI Specification references the same ICD paragraph as CEI Specification 3.3.4.2.2. The content herein is therefore the same as the one contained in HRC-ACPT-075, the summary report for CEIS requirement 3.3.4.2.2.

The HRC has four mechanisms which could potentially violate the ICD requirement for disturbances being small enough to avoid degrading the observation of either FPSI. They are the detector door mechanism, two shutter mechanisms, and the calibration source mechanism. Each mechanism type is addressed as follows:

Door Mechanism. The door mechanism was the subject of an extensive TRW analysis that is documented in TRW IOC 95.M440.3-028 AXAF.95.333.128 dated May 1, 1995. The conclusion of the study was that the operation of the HRC door mechanism would result in disturbances that exceeded the allowable limits. The study was conducted on the basis of an HRC motor stepping rate of 250 steps/second. The study recommended either incremental opening of the door, as opposed to a continuous slew, or a reduction in the slew rate by a factor of 8. The door motor stepping rate was subsequently reduced to 125 steps/second, still a factor of 4 more than required to eliminate the problem. For this reason, an operational restriction has been placed on operating the HRC door while ACIS is in the viewing position and making an observation. There is no restriction while ACIS is not making an observation or while the HRC is in the viewing position.

Shutter mechanisms. The TRW study did not calculate the effects of shutter operation but concluded that the significantly smaller mass of the shutters compared to the door most likely would result in any disturbances being negligible. More importantly, the HRC shutters are only used while the HRC is in the viewing position so there is no potential for interference with ACIS observations. There is also no impact on HRC observations because no attempt is made to obtain useful data while the shutters are moving.

Calibration source mechanism. Again, the TRW study did not calculate the effect of operating the calibration source but its mass is even less than the mass of the shutters. It is planned to operate the HRC calibration mechanism while ACIS is observing, but if orbital checkout operations demonstrate that for some unforseen reason that operation of the calibration source is a problem, its operation can be synchronized to the start or end of and ACIS observation in much the same way as the HRC door will be dealt with.

20 MAR 98

HRC Cognizant Engineer / Date

MOTOR COMMANDS

| CMD#-VALUE | FUNCTION | TLM BYTE-BIT |
|---|---|---|
| 18h 24-YY | MOTOR CNTRL POSITION HIGH BYTE | 69-YY |
| 19h 25-YY | MOT CNTRL POSITION LOW BYTE | 70-YY |
| 49H 73-0 | MOT OVER CURRENT DISABLE | 71-1 |
| 49h 73-1 | MOT OVER CURRENT ENABLE | 71-1 |
| 4Ah 74-0 | MOT OVER TEMPERATURE DISABLE | 71-2 |
| 4Ah 74-1 | MOT OVER TEMPERATURE DISABLE | 71-2 |
| 50h 80-0 | PRIM DOOR CLOSED OR SHUTTER HOME = POS A DISABLE | 72-0 |
| 50h 80-1 | PRIM DOOR CLOSED OR SHUTTER HOME = POS A ENABLE | 72-0 |
| 51h 81-0 | REDUN DOOR CLOSED OR SHUTTER HOME = POS A DISABLE | 72-1 |
| 51h 81-1 | REDUN DOOR CLOSED OR SHUTTER HOME = POS A ENABLE | 72-1 |
| 52h 82-0 | PRIM DOOR OPEN OR SHUTTER MAX = POS B DISABLE | 72-2 |
| 52h 82-1 | PRIM DOOR OPEN OR SHUTTER MAX = POS B ENABLE | 72-2 |
| 53h 83-0 | REDUN DOOR OPEN OR SHUTTER MAX = POS B DISABLE | 72-3 |
| 53h 83-1 | REDUN DOOR OPEN OR SHUTTER MAX = POS B ENABLE | 72-3 |
| 54h 84-1 | CLEAR STOP FLAGS | 72-4 |
| 54h 84-0 | ENABLE STOP FLAGS | 72-4 |
| 68h 104-0 | MOT DRIVE DISABLE | 68-0 |
| 68h 104-1 | MOT DRIVE ENABLE | 68-0 |
| 69h 105-0 | CLR FLAG GO HOME THEN TO CNTRL REG VALUE POS | 68-1 |
| 69h 105-1 | SET FLAG GO HOME THEN TO CNTRL REG VALUE POS | 68-1 |
| 6Ah 106-0 | CLR FLAG MOVE TO CLOSED OR HOME = POS A | 68-2 |
| 6Ah 106-1 | SET FLAG MOVE TO CLOSED OR HOME = POS A | 68-2 |
| 6Bh 107-0 | CLR FLAG MOVE TO OPEN OR MAX = POS B | 68-3 |
| 6Bh 107-1 | SET FLAG MOVE TO OPEN OR MAX = POS B | 68-3 |
| 6Ch 108-0 | CLR FLAG MOVE REG VALUE TWORD CLSD OR HOME =POSA | 68-4 |
| 6Ch 108-1 | SET FLAG MOVE REG VALUE TWORD CLSD OR HOME =POSA | 68-4 |
| 6Dh 109-0 | CLR FLAG MOVE REG VALUE TWORD OPEN OR MAX = POSB | 68-5 |
| 6Dh 109-1 | SET FLAG MOVE REG VALUE TWORD OPEN OR MAX = POSB | 68-5 |
| 6Eh 110-X | SPARE | 68-6 |
| 6Fh 111-X | MOTION CNTRL RESET | 68-7 |
| 70h 112-X | ALL MOTORS DESELECT | 66-0 |
| 71h 113-X | DOOR MOTOR SELECT | 66-1 |
| 72h 114-X | CAL MOTOR SELECT | 66-2 |
| 73h 115-X | +Y SHUTTER MOTOR SELECT | 66-3 |
| 74h 116-X | -Y SHUTTER MOTOR SELECT | 66-4 |

motwds
06/03/97

| | |
|---|---|
| BYTE 66 | MOTOR SELECT MOTOR SELECTION STATUS |
| BIT 7 | SPARE HIGH |
| BIT 6 | SPARE HIGH |
| BIT 5 | SPARE HIGH |
| BIT 4 | MOTOR 4 +Y SELECTED (CMD 116) |
| BIT 3 | MOTOR 3 -Y SELECTED (CMD 115) |
| BIT 2 | MOTOR 2 CAL SELECTED (CMD 114) |
| BIT 1 | MOTOR 1 DOOR SELECTED (CMD 113) |
| BIT 0 | ALL MOTORS DESELECTED (CMD 112) |

| | |
|---|---|
| BYTE 67 | MOTOR CONTROLLER CURRENT STATUS |
| BIT 7 | STROBE RESET H ALWAYS HIGH |
| BIT 6 | CCW/CW |
| BIT 5 | N STEP B FLAG H MOVING N STEPS TOWARDS MAX |
| BIT 4 | N STEP A FLAG H MOVING N STEPS TOWARDS HOME |
| BIT 3 | MOVE B FLAG H MOVING TO MAX |
| BIT 2 | MOVE A FLAG H MOVING TO HOME |
| BIT 1 | POS FLAG H MOVING TO SPECIFIED POSITION |
| BIT 0 | DRIVE EN H |

| | |
|---|---|
| BYTE 68 | MOTOR CONTROLLER LAST CMD |
| BIT 7 | STROBE RESET H ALWAYS HIGH (CMD 111 PULSE ~1USEC) |
| BIT 6 | SPARE ZERO |
| BIT 5 | N STEP B FLAG H (CMD 109) TOWARDS MAX |
| BIT 4 | N STEP A FLAG H (CMD 108) TOWARDS HOME |
| BIT 3 | MOVE B FLAG H (CMD 107) TO MAX |
| BIT 2 | MOVE A FLAG H (CMD 106) TO HOME |
| BIT 1 | POS FLAG H (CMD 105) MOVE TO SPECIFIED POSITION |
| BIT 0 | DRIVE EN H (CMD 104) |

BYTE 69 MOTOR CONTROLLER STEP COUNT LAST HI BYTE (CMD 25)
NOTE :ONLY VALID AFTER OPERATION COMPLETED

| | | |
|---|---|---|
| BIT 7 | BIT 15 | 32768 |
| BIT 6 | BIT 14 | 16384 |
| BIT 5 | BIT 13 | 8192 |
| BIT 4 | BIT 12 | 4096 |
| BIT 3 | BIT 11 | 2048 |
| BIT 2 | BIT 10 | 1024 |
| BIT 1 | BIT 09 | 512 |
| BIT 0 | BIT 08 | 256 |

BYTE 70 MOTOR CONTROLLER STEP COUNT LAST LO BYTE (CMD 24)

NOTE :ONLY VALID AFTER OPERATION COMPLETED

| | | |
|---|---|---|
| BIT 7 | BIT 07 | 128 |
| BIT 6 | BIT 06 | 64 |
| BIT 5 | BIT 05 | 32 |
| BIT 4 | BIT 04 | 16 |
| BIT 3 | BIT 03 | 8 |
| BIT 2 | BIT 02 | 4 |
| BIT 1 | BIT 01 | 2 |
| BIT 0 | BIT 00 | 1 |

BYTE 71 MOTOR DRIVER

| | |
|---|---|
| BIT 7 | SPARE ZERO |
| BIT 6 | OVER CURRENT MONITOR |
| BIT 5 | OVER TEMP MONITOR |
| BIT 4 | SPARE ZERO |
| BIT 3 | SPARE ZERO |
| BIT 2 | OVER TEMP ENABLE (CMD 74) |
| BIT 1 | OVER CURRENT ENABLE (CMD 73) |
| BIT 0 | SPARE ZERO |

BYTE 72 MOTOR SELECT LIMIT SWITCH CMD STATUS

| | |
|---|---|
| BIT 7 | SPARE (CMD 87) |
| BIT 6 | SPARE (CMD 86) |
| BIT 5 | SPARE (CMD 85) |
| BIT 4 | CLR FLAGS = 1 ENABLE FLAGS = 0 (CMD 84) |
| BIT 3 | OPEN-MAX-B STOP ENABLE (CMD 83) [SECONDARY SW] |
| BIT 2 | OPEN-MAX-B POS ENABLE (CMD 82) [PRIMARY SW] |
| BIT 1 | CLOSED-HOME-A STOP ENABLE (CMD 81) [SECONDARY SW] |
| BIT 0 | CLOSED-HOME-A POS ENABLE (CMD 80) [PRIMARY SW] |

BYTE 73 MOTOR SELECT LIMIT STATUS RUNNING & RESULT

| | |
|---|---|
| BIT 7 | SPARE HIGH |
| BIT 6 | SPARE HIGH |
| BIT 5 | STOP B DETECTED (LATCHED) [MAX SECONDARY SW] |
| BIT 4 | B STOP B ACTIVE [MAX SECONDARY SW] |
| BIT 3 | B POS B ACTIVE [MAX PRIMARY SW] |
| BIT 2 | STOP A DETECTED (LATCHED) [HOME SECONDARY SW] |
| BIT 1 | A STOP A ACTIVE [HOME SECONDARY SW] |
| BIT 0 | A POS A ACTIVE [HOME PRIMARY SW] |

| REVISIONS | | | | |
|---|---|---|---|---|
| ZONE | LTR | DESCRIPTION | DATE | APPROVED |
| | C | REVISED PER ECO NO. 10521 | | |

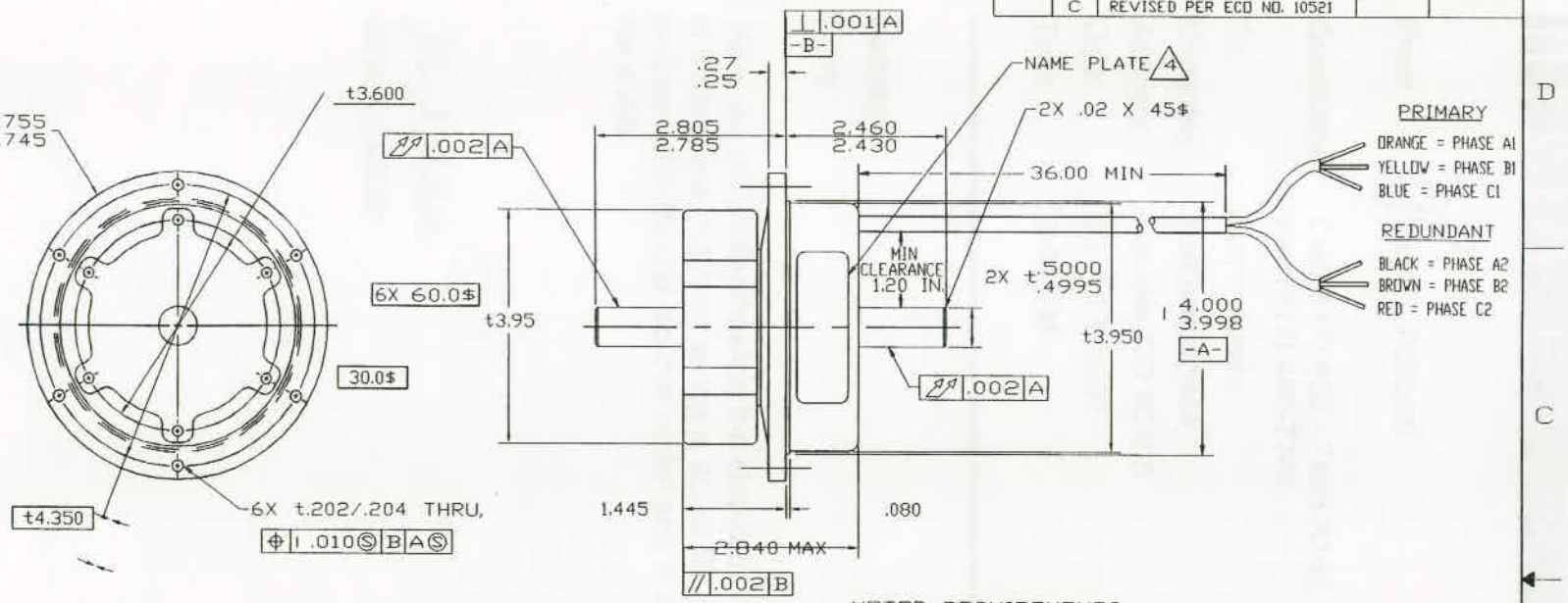


## MOTOR REQUIREMENTS

POWER: 7.1 watts
STEP RATE: MIN 20 pps
NOMINAL 100 pps
MAX 300 pps
OPERATING VOLTAGE: MIN 22 volts
NOMINAL 28 volts
MAX 30 volts

STALL CURRENT: MAX 564 mA
WINDING DC RESISTANCE: NOMINAL 39 ohms

WINDING INDUCTANCE: NOMINAL L/L 21 mH

OUTPUT STEP ANGLE: .009375°
STEPS/REVOLUTION: 38400 (REF)
HARMONIC DRIVE RATIO: 160:1
DRIVE MOTOR: 1.5° PERMANENT MAGNET TYPE
OUTPUT SHAFT SPEED: 1.0°-3.75°/SEC
OUTPUT CAPABILITY:
FRICTIONAL: 200 IN-LBS MIN
HOLDING TORQUE:
POWERED: 200 IN-LBS MIN
UNPOWERED: 50 IN-LBS MIN
TORSIONAL STIFFNESS: 40000 IN-LBS/RADIAN
SHAFT MOMENT LOAD CAPACITY: 18 FT-LBS MIN
MAX WEIGHT: 4 LBS.

NOTES:

1. MATERIAL: N/A
2. FINISH: N/A
3. MOTOR SPECIFICATION PER S-HRC-310.
4. NAME PLATE LOCATED AS SHOWN AND MARKED PER S-HRC-310.
5. ONLY THE ITEM DESCRIBED ON THIS DRAWING WHEN PROCURED FROM THE VENDOR LISTED HEREON IS APPROVED BY SMITHSONIAN ASTROPHYSICAL OBSERVATORY, CAMBRIDGE, MA. FOR USE IN THE APPLICATION SPECIFIED HEREON. A SUBSTITUTE ITEM SHALL NOT BE USED WITHOUT PRIOR APPROVAL BY SMITHSONIAN ASTROPHYSICAL OBSERVATORY, CAMBRIDGE, MA.
6. IDENTIFICATION OF THE APPROVED SOURCE HEREON IS NOT TO BE CONSTRUED AS A GUARANTEE OF PRESENT OR CONTINUED AVAILABILITY AS A SOURCE OF SUPPLY FOR THE ITEM DESCRIBED ON THE DRAWING.
7. APPROVED SOURCE:
SCHAEFFER MAGNETICS, INC.
9175 DEERING AVE.
CHATSWORTH, CALIFORNIA 91311-5897
(818) 341-5156
CAGE CODE 29371

SOURCE CONTROL DRAWING

| | | |
|---|---|---|
| REMOVE BURRS AND BREAK SHARP EDGES | DR J.DARCO DATE 7-26-94 | CHK R.DEPAVAO DATE 9-26-94 |
| UNLESS OTHERWISE SPECIFIED DIMENSIONS ARE IN INCHES | DSGN APPD DATE | |
| TOLERANCES ON FRACTIONS \ DECIMALS .XX \.01 .XXX \.005 ANGLES \25° | DSGN APPD DATE | |
| | ENGR APPD DATE | J.POLIZOTTI 9-26-94 |
| MACH. FIN: 63 | PROJ APPD DATE | R.MOORE 9-29-94 |
| MAT'L: 1 FIN: 2 | CM | K.DAIGLE 9-27-94 |
| NEXT ASSY HRC-501 | | |

SMITHSONIAN ASTROPHYSICAL OBSERVATORY
CENTRAL ENGINEERING CAMBRIDGE, MA.

HRC DOOR DRIVE MOTOR

| SIZE | CODE IDENT NO. | DWG NO. | REV |
|---|---|---|---|
| C | 50944 | HRC-1000 | C |

SCALE NONE IDEAS V6.1 SHEET 1 OF 1

FIGURE 1.1-2

# HRC Door Mechanism Motion

*Door Angle vs. Input Step Count*

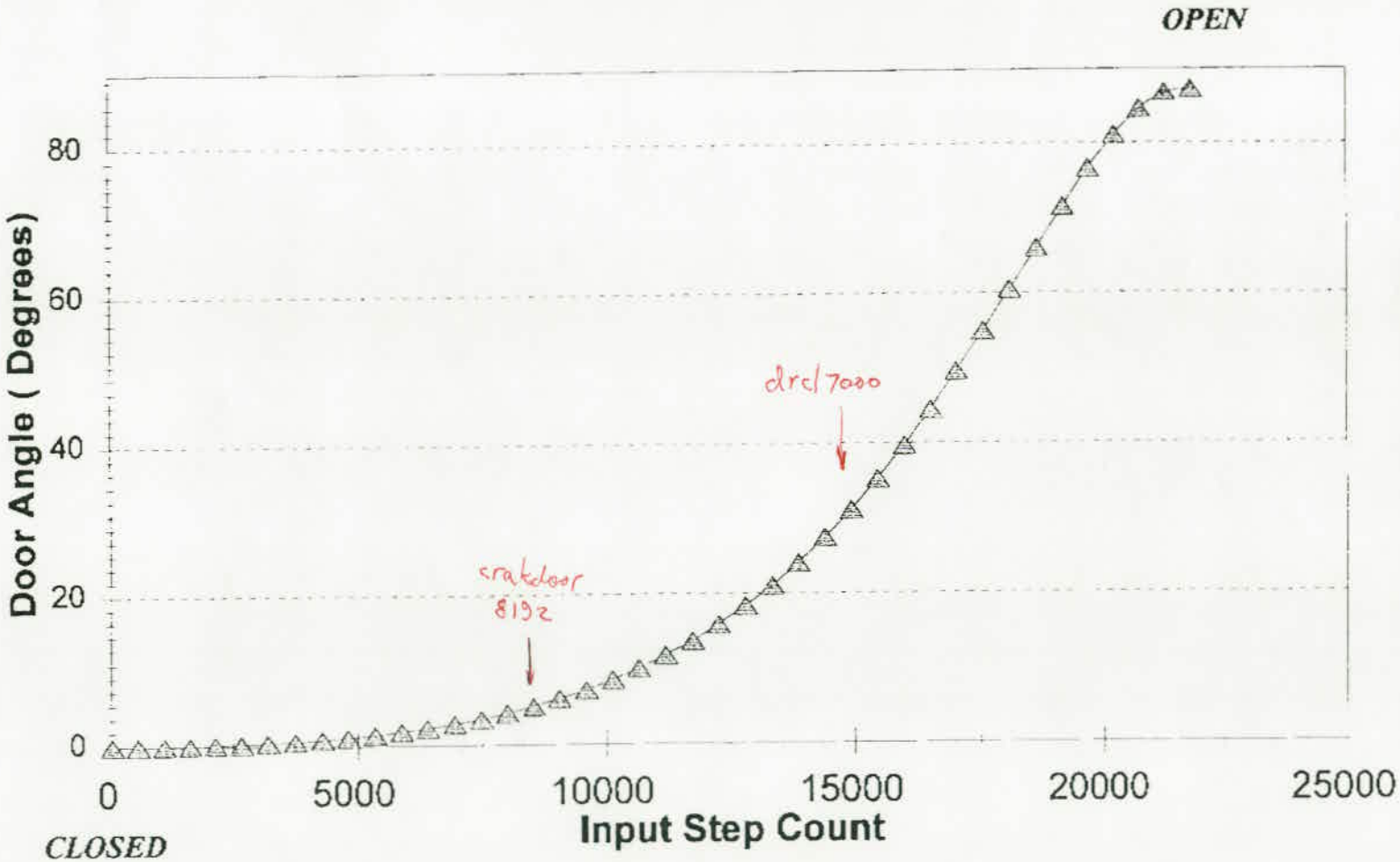

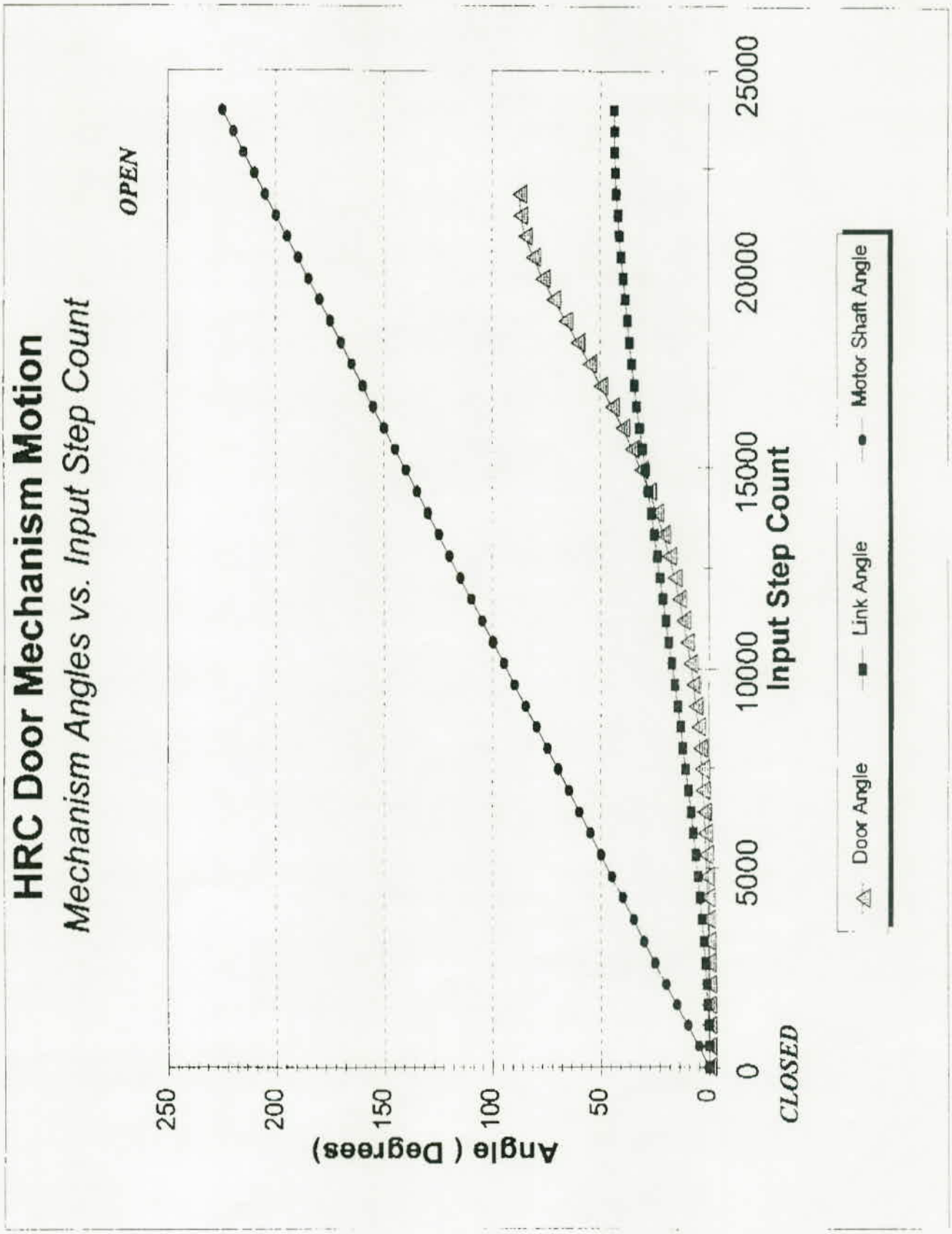
HRC Door Mechanism Motion
Mechanism Angles vs. Input Step Count
OPEN
CLOSED
Angle ( Degrees)
250
200
150
100
50
0
0
5000
10000
15000
20000
25000
Input Step Count
Door Angle
Link Angle
Motor Shaft Angle

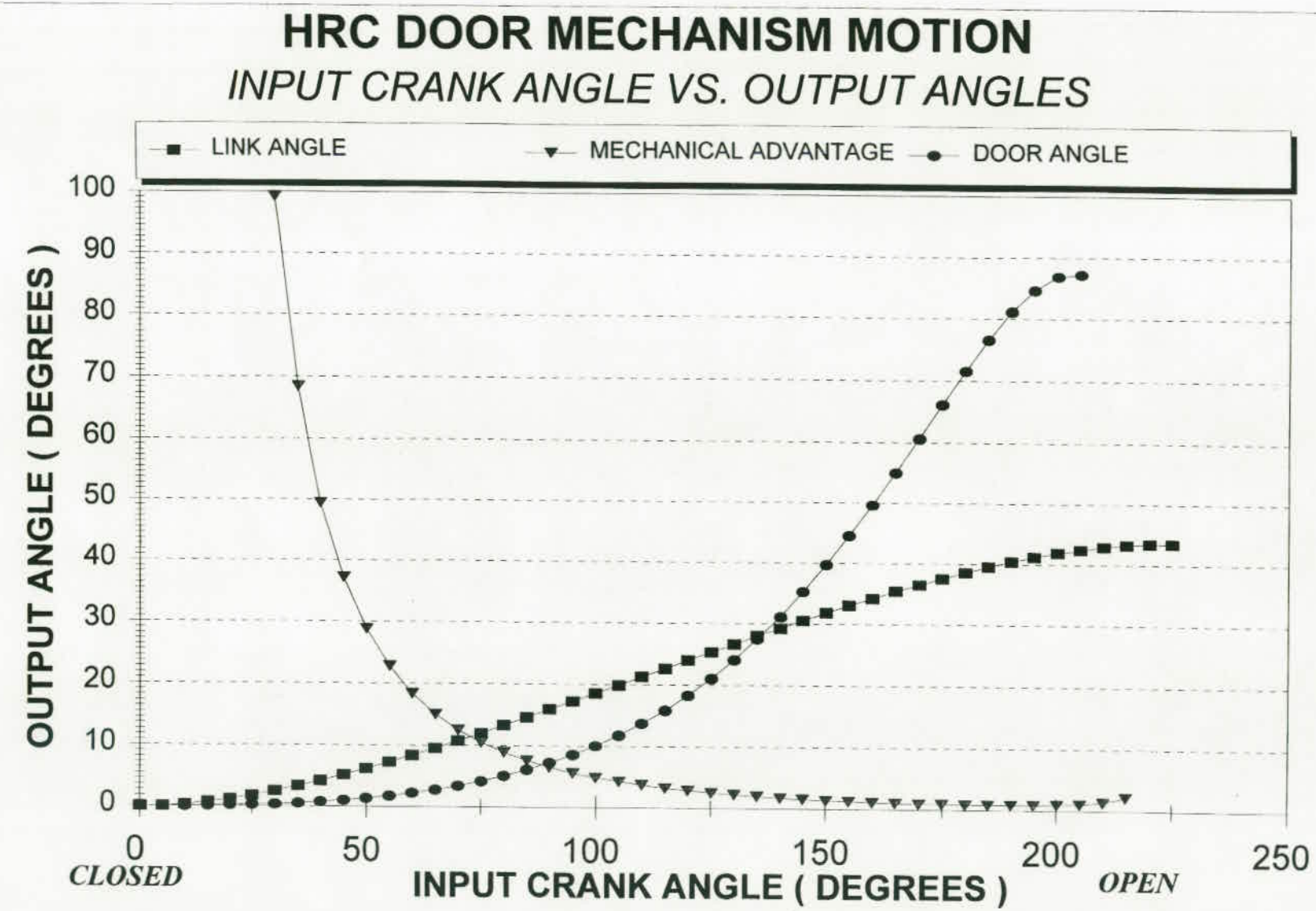
HRC DOOR MECHANISM MOTION
INPUT CRANK ANGLE VS. OUTPUT ANGLES
LINK ANGLE
MECHANICAL ADVANTAGE
DOOR ANGLE
OUTPUT ANGLE ( DEGREES )
100
90
80
70
60
50
40
30
20
10
0
0
50
100
150
200
250
CLOSED
INPUT CRANK ANGLE ( DEGREES )
OPEN

*FIGURE 2.1-2*

| REVISIONS | | | | |
|---|---|---|---|---|
| ZONE | LTR | DESCRIPTION | DATE | APPROVED |
| | B | REVISED PER ECO NO. 10522 | | |

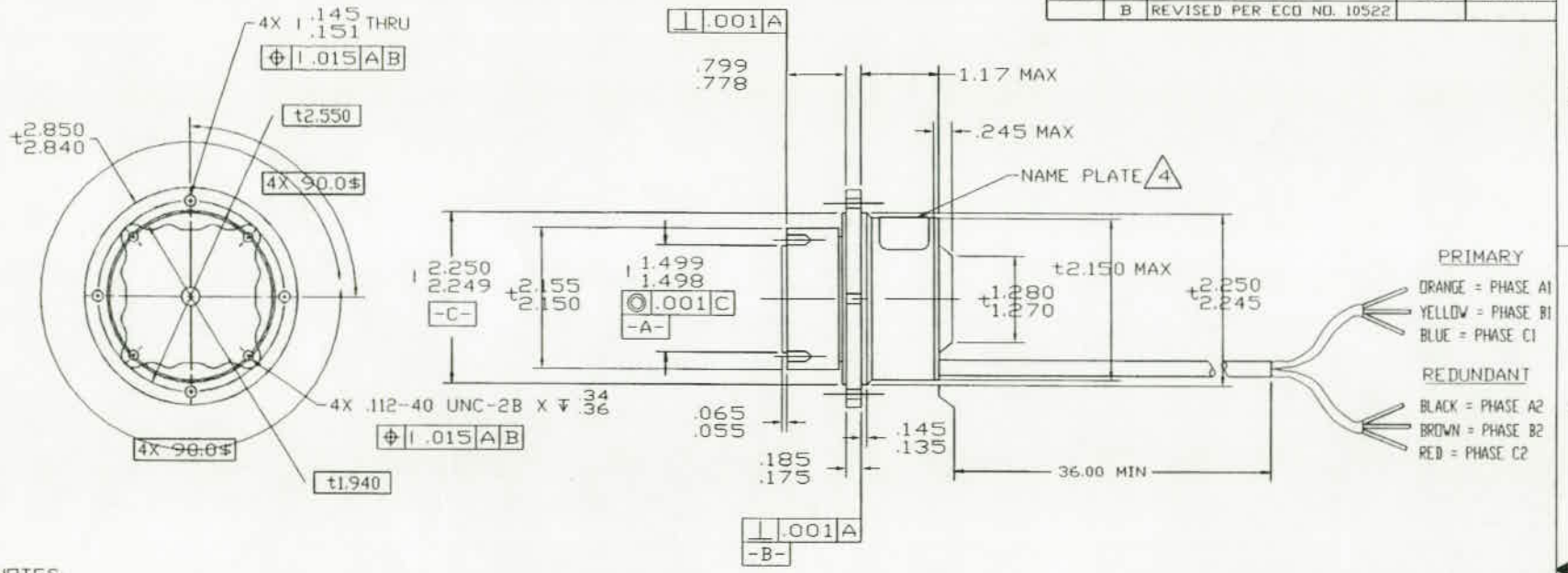


NOTES:

1. MATERIAL: N/A
2. FINISH: N/A
3. MOTOR SPECIFICATION PER S-HRC-310.
4. NAME PLATE LOCATED AS SHOWN AND MARKED PER S-HRC-310.
5. ONLY THE ITEM DESCRIBED ON THIS DRAWING WHEN PROCURED FROM THE VENDOR LISTED HEREON IS APPROVED BY SMITHSONIAN ASTROPHYSICAL OBSERVATORY, CAMBRIDGE, MA FOR USE IN THE APPLICATION SPECIFIED HEREON. A SUBSTITUTE ITEM SHALL NOT BE USED WITHOUT PRIOR APPROVAL BY SMITHSONIAN ASTROPHYSICAL OBSERVATORY, CAMBRIDGE, MA.
6. IDENTIFICATION OF THE APPROVED SOURCE HEREON IS NOT TO BE CONSTRUED AS A GUARANTEE OF PRESENT OR CONTINUED AVAILABILITY AS A SOURCE OF SUPPLY FOR THE ITEM DESCRIBED ON THE DRAWING.
7. APPROVED SOURCE:
   SCHAEFFER MAGNETICS, INC.
   9175 DEERING AVE.
   CHATSWORTH, CALIFORNIA 91311-5897
   (818) 341-5156
   CAGE CODE 29371

## MOTOR REQUIREMENTS

POWER: (NOM) 6.5 watts @@ 200 pps AND 28VDC
STEP RATE: MIN 50 pps
NOMINAL 200 pps
MAX 300 pps
OPERATING VOLTAGE: MIN 22 volts
NOMINAL 28 volts
MAX 30 volts
STALL CURRENT: MAX 275 mA @@ 50 pps AND 30VDC
WINDING DC RESISTANCE: NOMINAL L/L 141 ohms
WINDING INDUCTANCE: NOMINAL L/L 90 mH

OUTPUT STEP ANGLE: .0625°
STEPS/REVOLUTION: 5760 (REF)
HARMONIC DRIVE RATIO: 60:1
DRIVE MOTOR: 3.75° PERMANENT MAGNET TYPE
OUTPUT SHAFT SPEED: 8.0°/SEC MIN
OUTPUT CAPABILITY:
FRICTIONAL: 6.0 IN-LBS MIN @@ 200 pps
HOLDING TORQUE:
POWERED: 6.0 IN-LBS MIN
UNPOWERED: 5.0 IN-LBS MIN
TORSIONAL STIFFNESS: 3000 IN-LBS/RADIAN
SHAFT MOMENT LOAD: 20 FT-LBS
MAX. WEIGHT: 1.5 LBS

SOURCE CONTROL DRAWING

| | | | |
|---|---|---|---|
| REMOVE BURRS AND BREAK SHARP EDGES | DR J.DARCO DATE 7-26-94 | CHK R.DEPAVAO DATE 9-26-94 | SMITHSONIAN ASTROPHYSICAL OBSERVATORY CENTRAL ENGINEERING CAMBRIDGE, MA. |
| UNLESS OTHERWISE SPECIFIED DIMENSIONS ARE IN INCHES | DSGN APPD DATE | | |
| TOLERANCES ON FRACTIONS ± DECIMALS .XX ±.01 .XXX ±.005 ANGLES ±.25° | DSGN APPD DATE | | HRC SHUTTER DRIVE MOTOR |
| | ENGR APPD DATE | | |
| MACH. FIN 63 | PROJ APPD DATE | R.MOORE 9-29-94 | SIZE C · CODE IDENT NO. 50944 · DWG NO. HRC-1001 · REV B |
| MAT'L 1 · FIN 2 | CM | K.DAIGLE 9-27-94 | |
| NEXT ASSY HRC-536 HRC-538 | | | SCALE NONE · IDEAS V6.1 · SHEET 1 OF 1 |

FIGURE 1.2-2

# SMITHSONIAN ASTROPHYSICAL OBSERVATORY
## MEMORANDUM

**To:** Distribution

**From:** R. Moore

**Date:** 1/5/95

HRC for AXAF-I

**Subject:** Shutter Control for HRC

**cc:** G.K. Austin, K. Daigle (SSE03), R. Garcia, J. Gomes, S.S. Murray, J. Poizotti, J. Swider, M.V. Zombeck, R.B. Dias (info)

---

Ref: HRCSHUT.TKW

As part of the operation of the HRC, focus measurements using the shutters, will be made. The technique will be analogous to the standard Foucault Knife test and requires that the shutters be positioned at the beam center, occulting first one half the beam, then the other half.

The attached model, done in TKSolver, relates the shutter commands (in motor steps) to the image position as indicated by the detector. The variables in the model can be adjusted as the design matures or the dimensions change due to assembly tolerance "stack-ups".

STEPS/REV = 5760
(.0625°/STEP)

# FIGURE : 1 DETECTOR U and V AXES

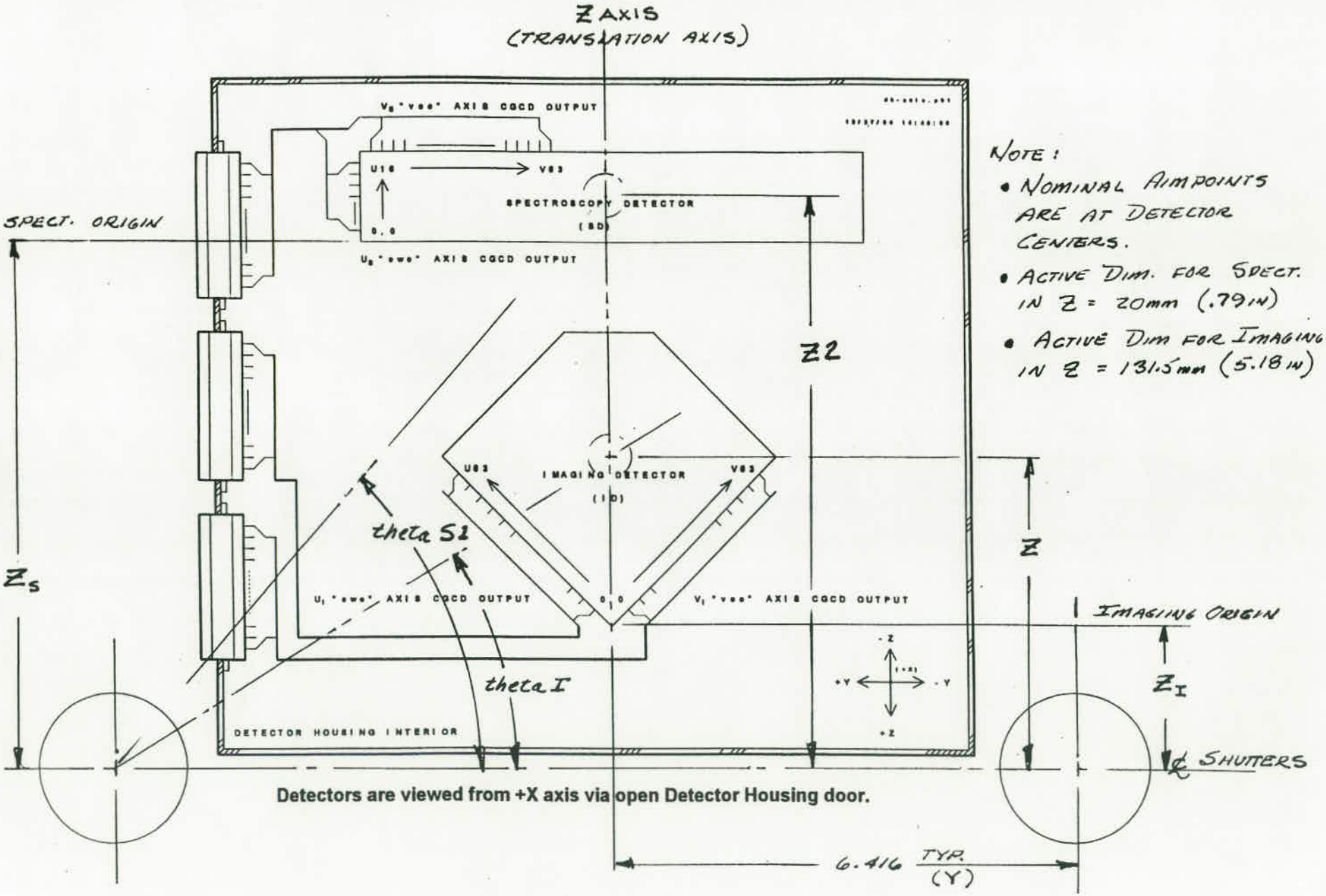


Detectors are viewed from +X axis via open Detector Housing door.

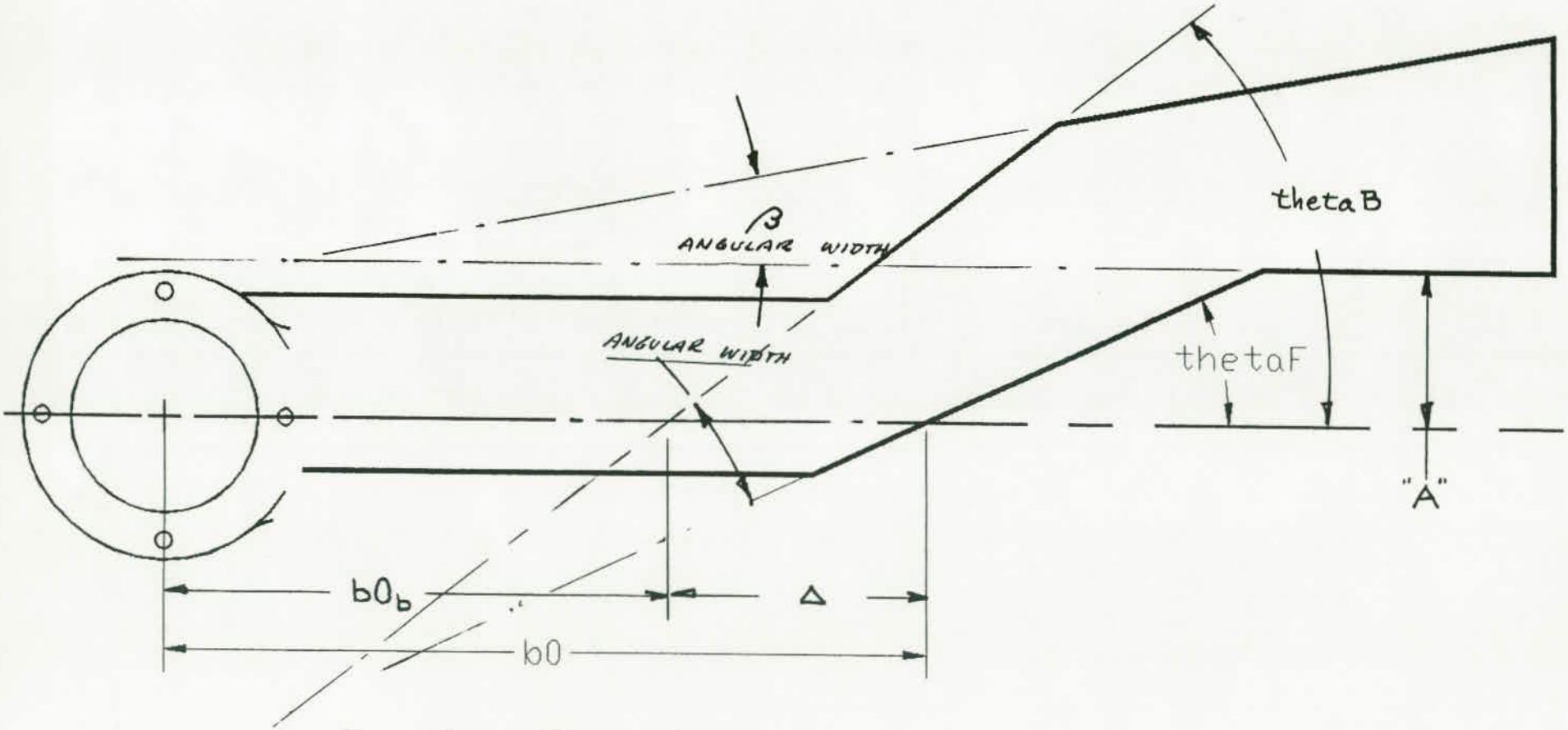


Shutter Blade Layout

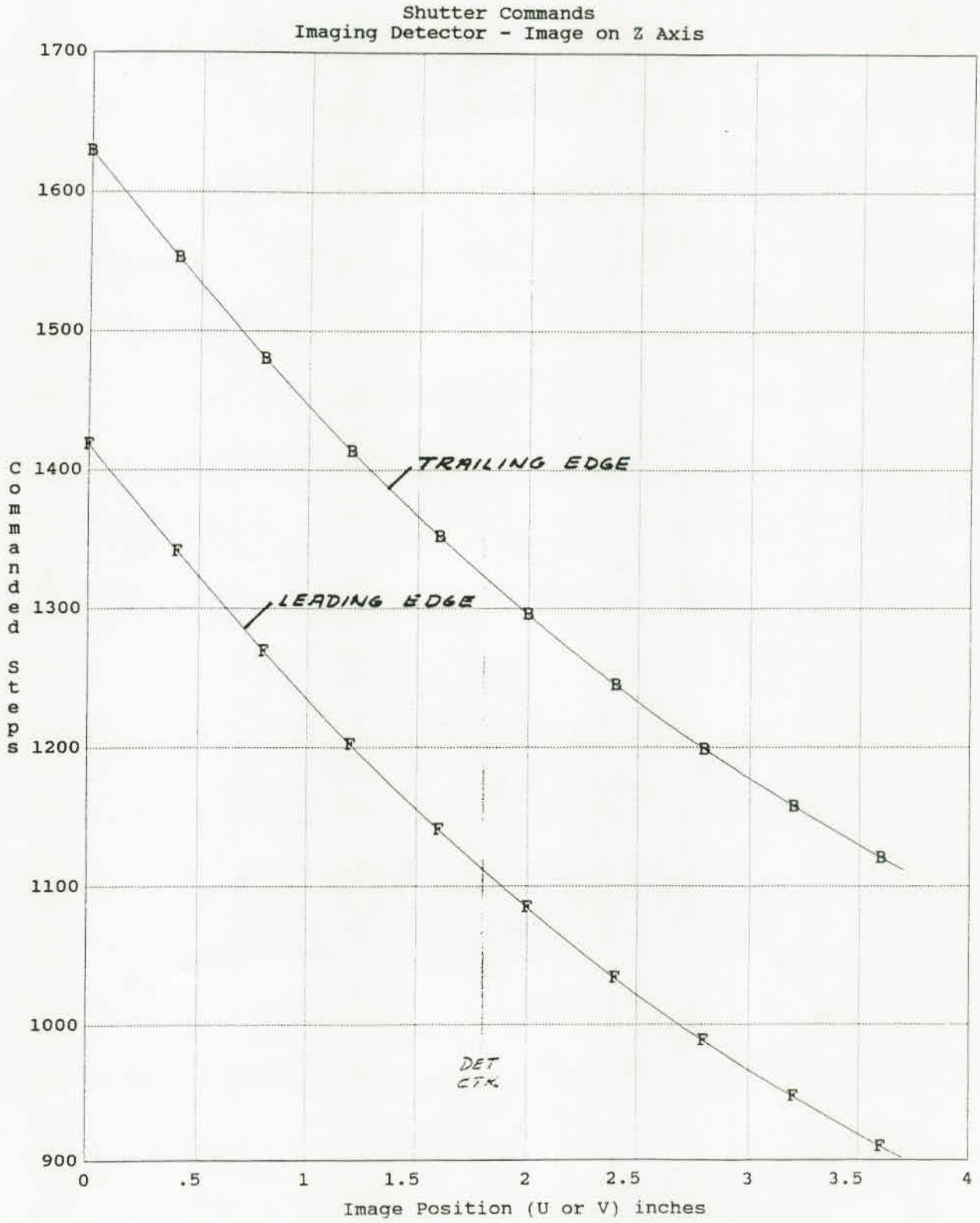
Shutter Commands
Imaging Detector - Image on Z Axis
Commanded Steps
1700
1600
1500
1400
1300
1200
1100
1000
900
0
.5
1
1.5
2
2.5
3
3.5
4
Image Position (U or V) inches
TRAILING EDGE
LEADING EDGE
DET CTR.

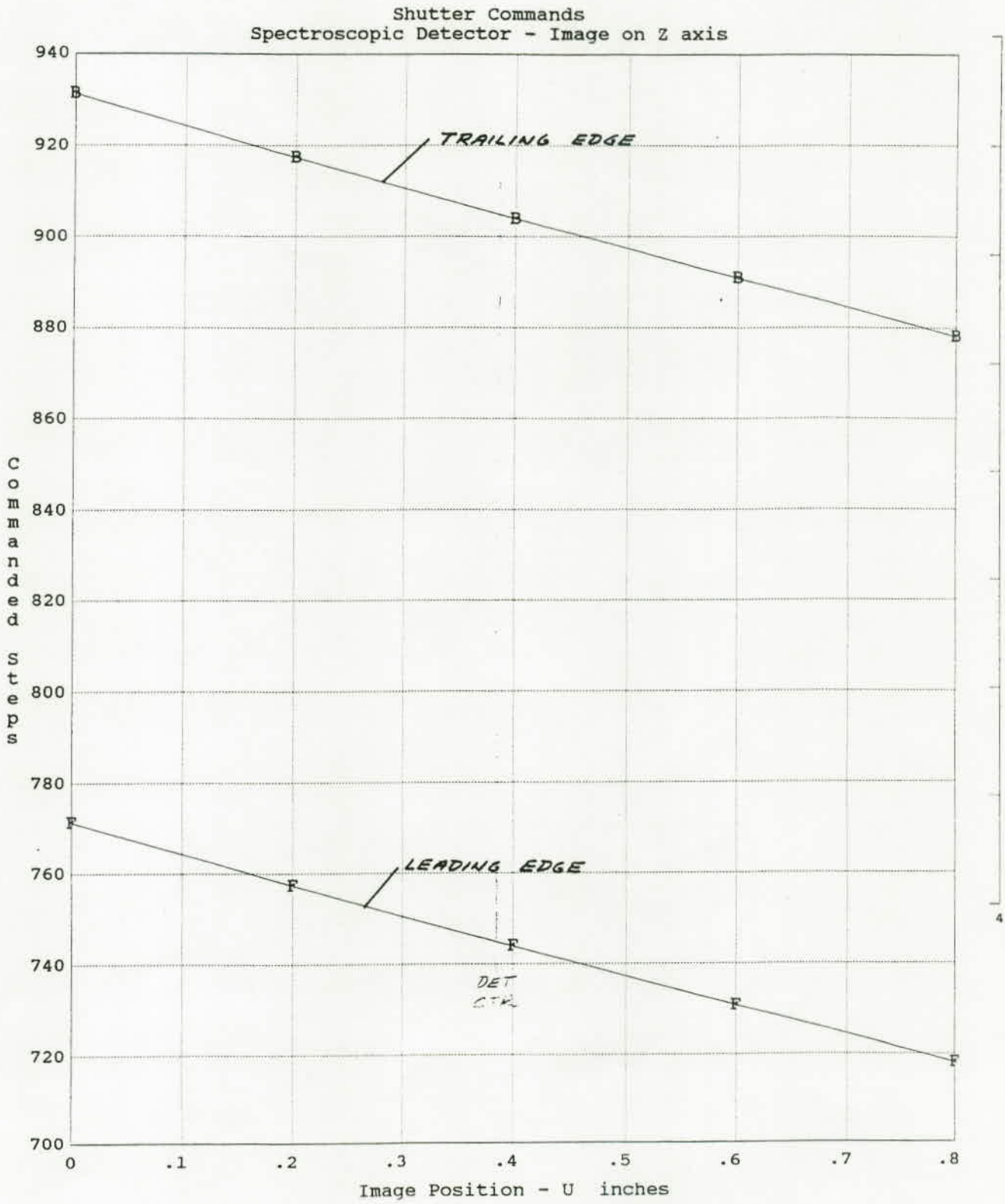
Shutter Commands
Spectroscopic Detector - Image on Z axis
TRAILING EDGE
LEADING EDGE
DET CTR
Commanded Steps
Image Position - U inches
940
920
900
880
860
840
820
800
780
760
740
720
700
0
.1
.2
.3
.4
.5
.6
.7
.8

S Rule

```
;The Following Section is for the Imaging Detector
* Z=Zi+(Ui^2+Vi^2)^.5  ;when the image is on the Z axis, Ui=Vi
* R=(Y^2+Z^2)^.5
                ;The following is for the "front" (leading edge) of the bla
* phi=180-(asind((b0*sind(180-thetaF))/R)+(180-thetaF))
* thetaI=asind(Z/R)
* thetaS=90-thetaI+phi
* steps=thetaS/Ds
               ; The following is for the "back" (trailing edge) of the bla
* phib=180-(asind(((b0-delta)*sind(180-thetaB))/R)+(180-thetaB))
* thetaSb=90-thetaI+phib   ; this can also be calculated as thetaS + ang
* stepsb=thetaSb/Ds
;The Following Section is for the Spectroscopic Detector
* Z2=Zs+Us
* Rs=(Y^2+Z2^2)^.5
               ; The following is for the "front" (leading edge) of the bla
* thetaS1=asind(Z2/Rs)
* psi=asind(A/Rs)
* thetaSp=90-thetaS1+psi
* steps2=thetaSp/Ds
               ; The following is for the "back" (trailing edge) of the bla
* thetaSpB=thetaSp+beta   ; initial angle + angular width of blade
* steps2B=thetaSpB/Ds
```

| St | Input | Name | Output | Unit | Comment |
|---|---|---|---|---|---|
| | 6.416 | Y | | in | distance from Z axis to shutter |
| L | | Z | 2.9280108 | in | distance from shutter CL to ima |
| | .34 | Zi | | in | distance from shutter CL to Im. |
| L | 1.83 | Ui | | in | dist. along det. axis to image |
| L | 1.83 | Vi | | in | dist along det. axis to image |
| | | phi | 3.755058 | deg | angle from R to shutter ctr. li |
| | 6 | b0 | | in | distance from shutter ctr to bl |
| | 24 | thetaF | | deg | angle to front of blade |
| | | R | 7.0525388 | in | "radius" to detector image |
| | | thetaI | 24.530097 | deg | basic angle to image |
| | | thetaS | 28.285155 | deg | angle of travel for shutter (to |
| L | | steps | 452.56247 | steps | No of steps for shutter motor |
| L | | phib | 0 | deg | angle from R to shutter CL |
| | 1.98 | delta | | in | diffrnce in intersection dist. |
| | 37 | thetaB | | deg | angle to back of blade |
| L | | thetaSb | 0 | deg | angle of travel for shutter (to |
| L | | stepsb | 0 | steps | No of steps for shutter motor ( |
| | .0625 | Ds | | | degrees per step for motor |
| L | | Z2 | 0 | in | Distance to image on Spect Det. |
| | 7.386 | Zs | | in | Distance to Spect. Det Origin |
| L | 0 | Us | | in | Dist from origin to image on Sp |
| L | | Rs | 0 | in | "radius" to image on spect det |
| L | | thetaS1 | 0 | deg | basic angle to image on spect. |
| L | | psi | 0 | deg | angle on blade |
| | 1.23 | A | | in | blade offset dim. |
| L | | thetaSp | 0 | deg | angle of travel for blade |
| L | | steps2 | 0 | steps | No of steps for motor |
| L | | thetaSpB | 0 | deg | angle of travel to back of blad |

| St | Input | Name | Output | Unit | Comment |
|---|---|---|---|---|---|
| | 10 | beta | | deg | angular width of blade |
| L | | steps2B | 0 | steps | No of steps for motor |

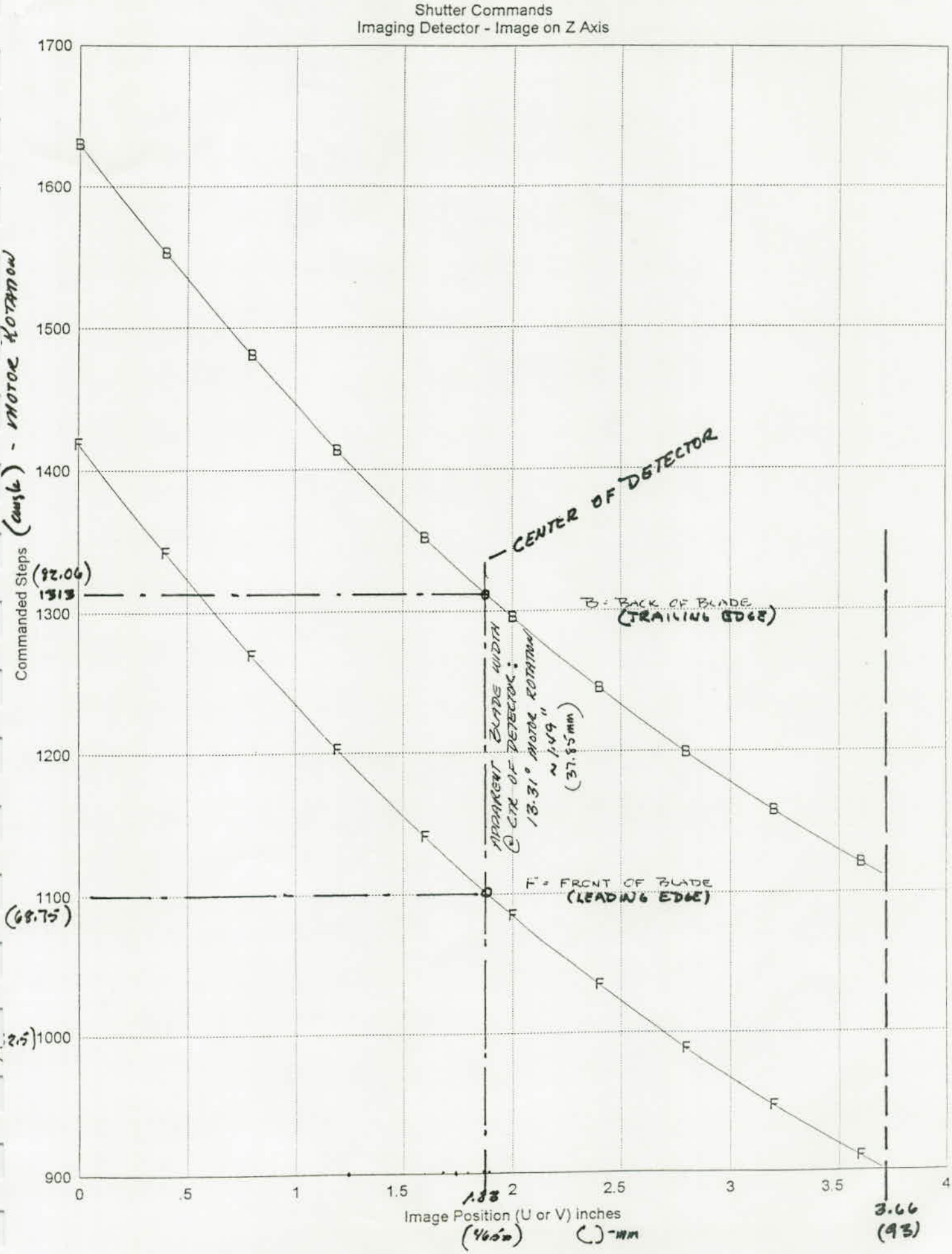
Shutter Commands
Imaging Detector - Image on Z Axis
Commanded Steps (angle) - MOTOR ROTATION
Image Position (U or V) inches
(46.50) ( )-mm
1700
1600
1500
1400
1300
1200
1100
1000
900
0
.5
1
1.5
1.88
2
2.5
3
3.5
4
3.66
(93)
(92.06)
1313
(68.75)
(2.5)
CENTER OF DETECTOR
B = BACK OF BLADE
(TRAILING EDGE)
F = FRONT OF BLADE
(LEADING EDGE)
APPARENT BLADE WIDTH
@ CTR OF DETECTOR:
13.31° MOTOR ROTATION
~1.49"
(37.85mm)

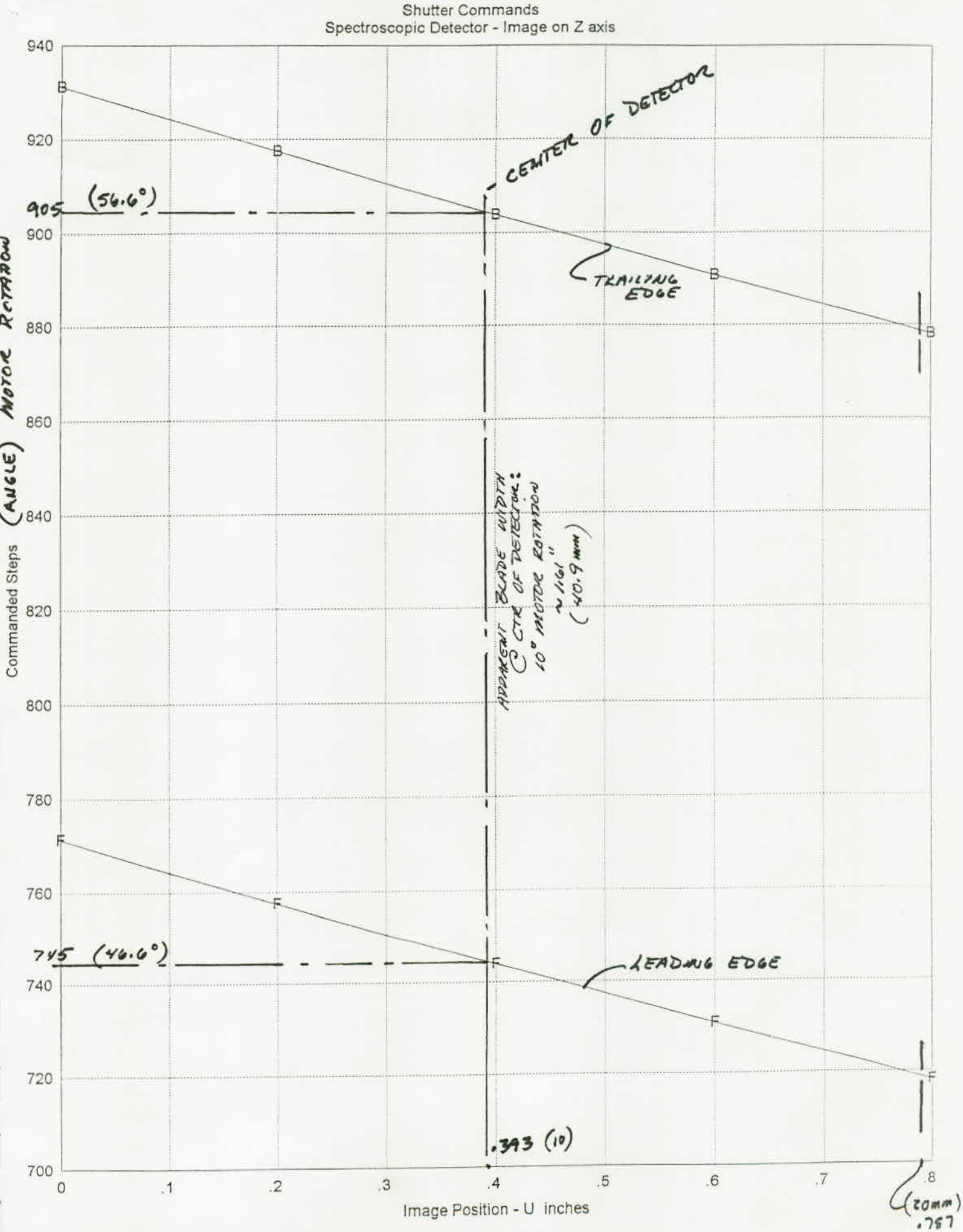
Shutter Commands
Spectroscopic Detector - Image on Z axis
Commanded Steps (ANGLE) MOTOR ROTATION
Image Position - U inches
940
920
905 (56.6°)
900
880
860
840
820
800
780
760
745 (46.6°)
740
720
700
0
.1
.2
.3
.4
.5
.6
.7
.8
B
F
CENTER OF DETECTOR
TRAILING EDGE
LEADING EDGE
APPARENT BLADE WIDTH @ CTR OF DETECTOR: 10° MOTOR ROTATION ~1.61" (40.9 mm)
.393 (10)
(20mm) .787

```
S- Rule
   ;The Following Section is for the Imaging Detector
*  Z=Zi+(Ui^2+Vi^2)^.5  ;when the image is on the Z axis, Ui=Vi
*  R=(Y^2+Z^2)^.5
          ;The following is for the "front" (leading edge) of the blade
*  phi=180-(asind((b0*sind(180-thetaF))/R)+(180-thetaF))
*  thetal=asind(Z/R)
*  thetaS=90-thetal+phi
*  steps=thetaS/Ds
          ; The following is for the "back" (trailing edge) of the blade
*  phib=180-(asind(((b0-delta)*sind(180-thetaB))/R)+(180-thetaB))
*  thetaSb=90-thetal+phib   ; this can also be calculated as thetaS + angular width of blade
*  stepsb=thetaSb/Ds
   ;The Following Section is for the Spectroscopic Detector
*  Z2=Zs+Us
*  Rs=(Y^2+Z2^2)^.5
          ; The following is for the "front" (leading edge) of the blade
*  thetaS1=asind(Z2/Rs)
*  psi=asind(A/Rs)
*  thetaSp=90-thetaS1+psi
*  steps2=thetaSp/Ds
          ; The following is for the "back" (trailing edge) of the blade
*  thetaSpB=thetaSp+beta   ; initial angle + angular width of blade
*  steps2B=thetaSpB/Ds
```

| Input | Name | Output | Unit | Comment |
|---|---|---|---|---|
| 6.416 | Y | | in | distance from Z axis to shutter |
| | Z | 2.9280108 | in | distance from shutter CL to image |
| .34 | Zi | | in | distance from shutter CL to Im. origin |
| 1.83 | Ui | | in | dist. along det. axis to image |
| 1.83 | Vi | | in | dist along det. axis to image |
| | phi | 3.755058 | deg | angle from R to shutter ctr. line |
| 6 | b0 | | in | distance from shutter ctr to blade frt. |
| 24 | thetaF | | deg | angle to front of blade |
| | R | 7.0525388 | in | "radius" to detector image |
| | thetaI | 24.530097 | deg | basic angle to image |
| | thetaS | 28.285155 | deg | angle of travel for shutter (to front) |
| | steps | 452.56247 | steps | No of steps for shutter motor |
| | phib | 0 | deg | angle from R to shutter CL |
| 1.98 | delta | | in | diffrnce in intersection dist. (see sketch) |
| 37 | thetaB | | deg | angle to back of blade |
| | thetaSb | 0 | deg | angle of travel for shutter (to back) |
| | stepsb | 0 | steps | No of steps for shutter motor (to back) |
| .0625 | Ds | | | degrees per step for motor |
| | | | | |
| | Z2 | 0 | in | Distance to image on Spect Det. |
| 7.386 | Zs | | in | Distance to Spect. Det Origin |
| 0 | Us | | in | Dist from origin to image on Spect. |
| | Rs | 0 | in | "radius" to image on spect det |
| | thetaS1 | 0 | deg | basic angle to image on spect. |
| | psi | 0 | deg | angle on blade |
| 1.23 | A | | in | blade offset dim. |
| | thetaSp | 0 | deg | angle of travel for blade |
| | steps2 | 0 | steps | No of steps for motor |
| | thetaSpB | 0 | deg | angle of travel to back of blade |
| 10 | beta | | deg | angular width of blade |
| | steps2B | 0 | steps | No of steps for motor |

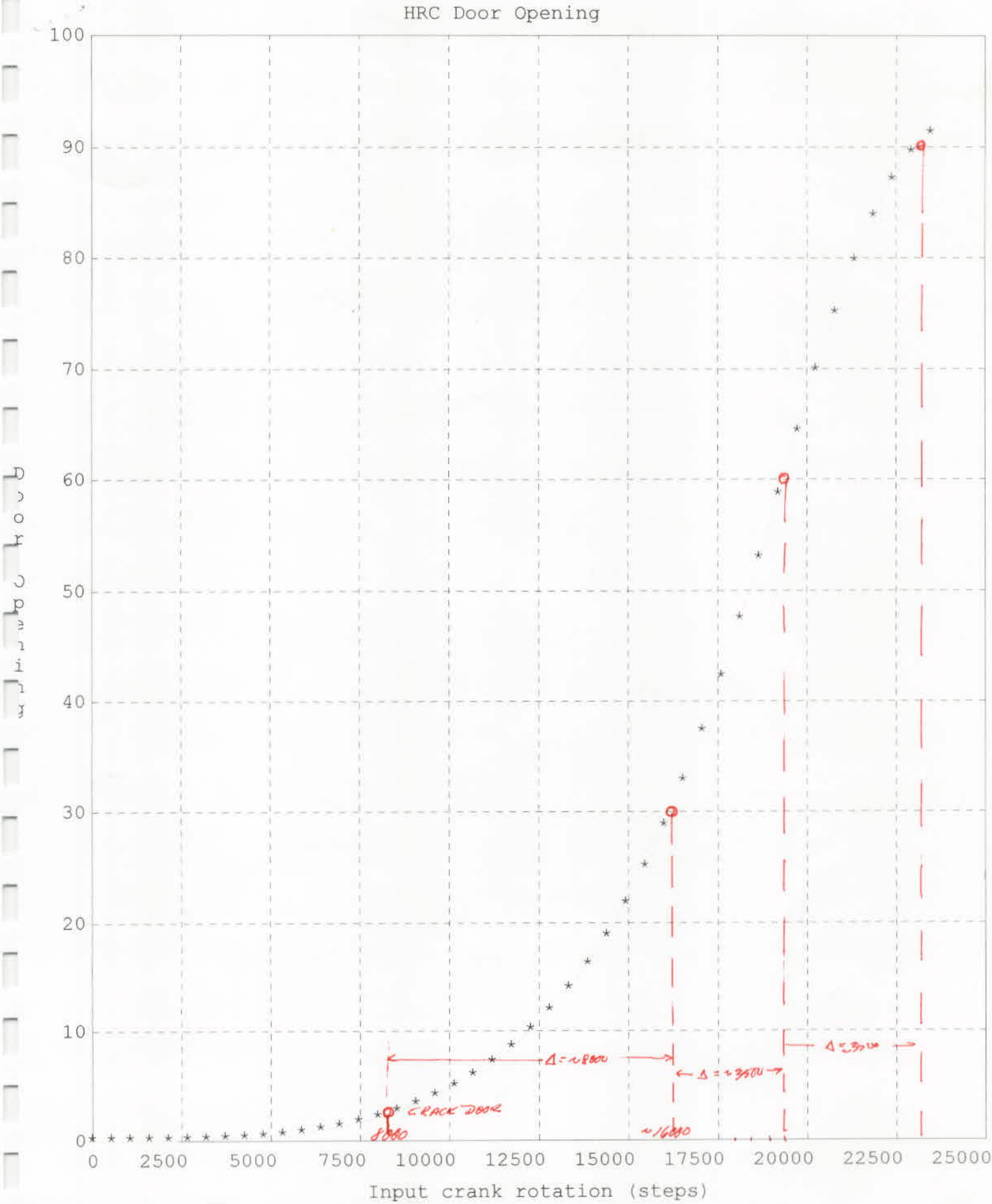
HRC Door Opening
Door Position
Input crank rotation (steps)
0
10
20
30
40
50
60
70
80
90
100
0
2500
5000
7500
10000
12500
15000
17500
20000
22500
25000
CRACK DOOR
8000
~16000
Δ = ~8000
Δ = ~3500
Δ = ~3500

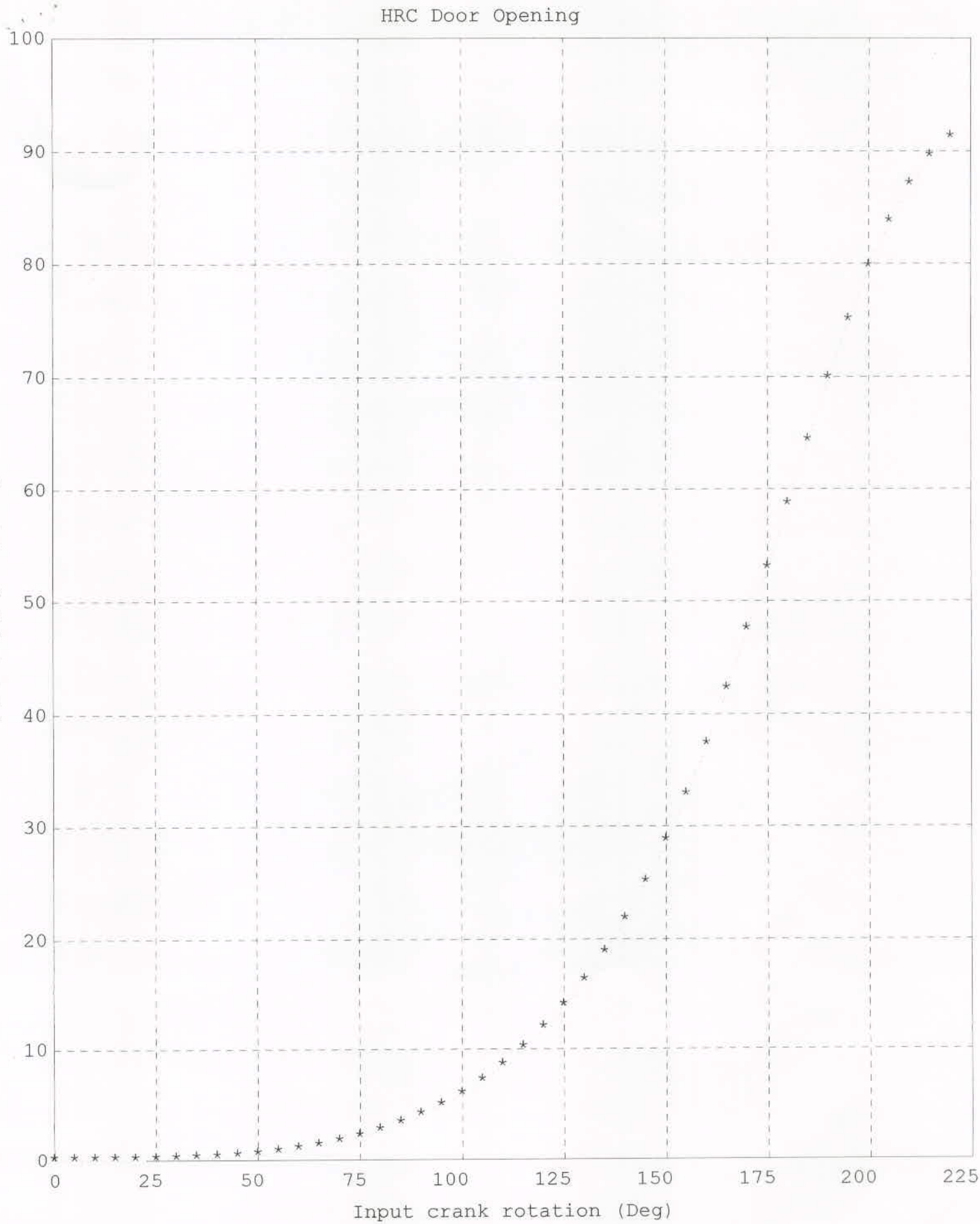
HRC Door Opening
Door Opening
Input crank rotation (Deg)
0
10
20
30
40
50
60
70
80
90
100
0
25
50
75
100
125
150
175
200
225

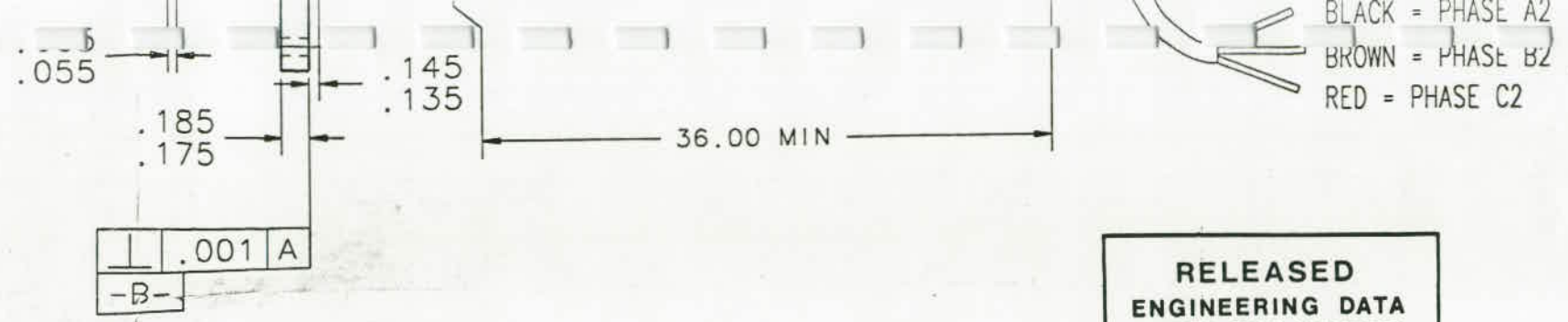


**RELEASED**
**ENGINEERING DATA UNDER ECO CONTROL**
**DATE** 9-29-94

## MOTOR REQUIREMENTS

POWER: 1.8 watts
STEP RATE: MIN 50 pps
NOMINAL 200 pps
MAX 300 pps
OPERATING VOLTAGE: MIN 22 volts
NOMINAL 28 volts
MAX 30 volts

STALL CURRENT: MAX 105 mA
WINDING DC RESISTANCE: NOMINAL 284 ohms

WINDING INDUCTANCE: NOMINAL 238 mH

OUTPUT STEP ANGLE: .0625°
STEPS/REVOLUTION: 5760 (REF)
HARMONIC DRIVE RATIO: 60:1
DRIVE MOTOR: 3.75° PERMANENT MAGNET TYPE
OUTPUT SHAFT SPEED: 8.0°/SEC MIN
OUTPUT CAPABILITY:
FRICTIONAL: 6.0 IN-LBS MIN
HOLDING TORQUE:
POWERED: 6.0 IN-LBS MIN
UNPOWERED: 5.0 IN-LBS MIN
TORSIONAL STIFFNESS: 3000 IN-LBS/RADIAN
SHAFT MOMENT LOAD: 20 FT-LBS
MAX. WEIGHT: 1.6 LBS

**FILE COPY** OCT 26 1994

# SOURCE CONTROL DRAWING

| | | | |
|---|---|---|---|
| REMOVE BURRS AND BREAK SHARP EDGES | DR J.DARCO DATE 07-26-94 | CHK R.DEPAVAO DATE 09-26-94 | SMITHSONIAN ASTROPHYSICAL OBSERVATORY CENTRAL ENGINEERING CAMBRIDGE, MA. |
| UNLESS OTHERWISE SPECIFIED DIMENSIONS ARE IN INCHES | DSGN APPD DATE | | |
| TOLERANCES ON FRACTONS ± DECIMALS .XX ± .01 .XXX ± .005 ANGLES ±.25° | DSGN APPD DATE | | HRC CALIBRATION MOTOR |
| MACH. FIN: 63 | ENGR APPD DATE | | |
| MAT'L: 1 FIN: 2 | PROJ APPD DATE 9/29/94 | | SIZE C / CODE IDENT NO. 50944 / DWG NO. HRC-1002 / REV A |
| NEXT ASSY HRC-528 | ~~CONTRACT~~ CM Dugle 08-27-94 | | SCALE NONE / IDEAS V6.i / SHEET 1 OF 1 |

# HIGH RESOLUTION CAMERA ASSEMBLY

## MECHANISM CRITICAL COMPONENTS

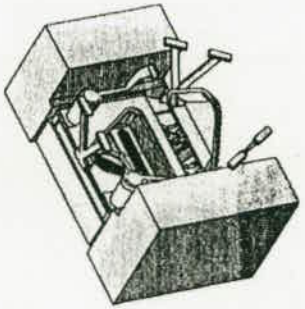

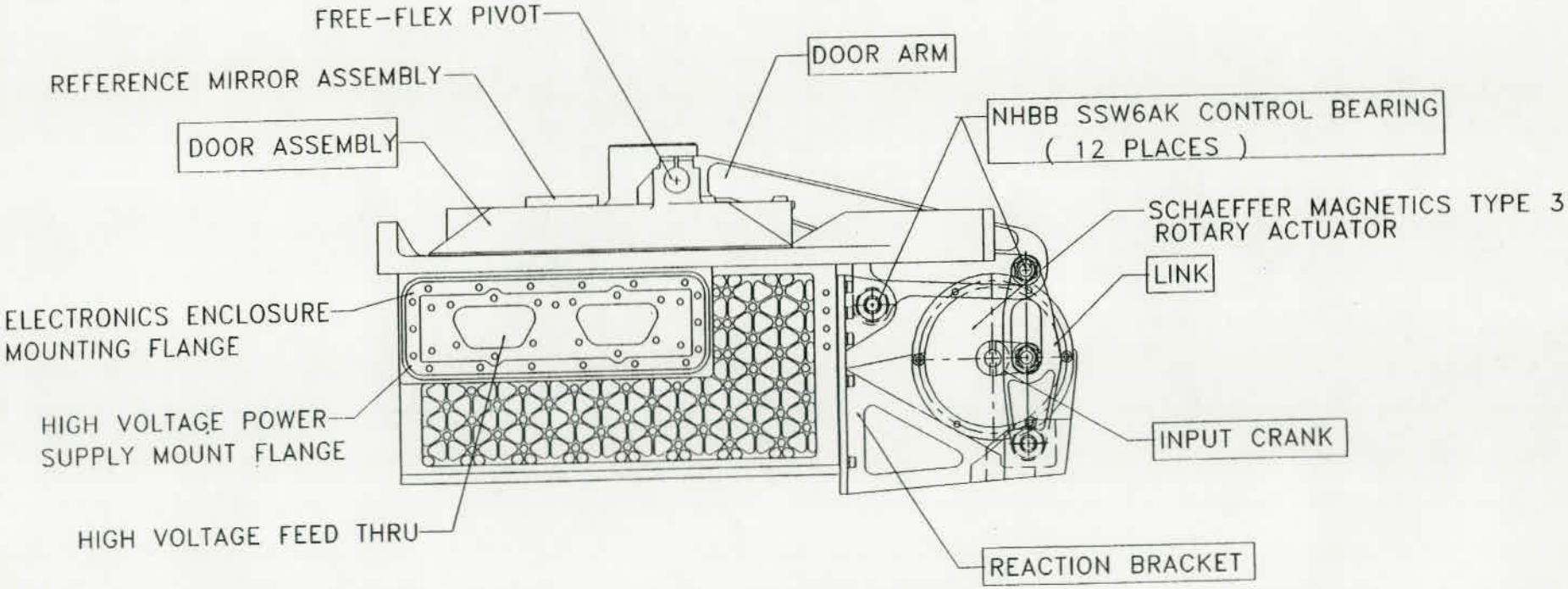


Ref. Dwg. HRC-500

| REVISIONS | | | | |
|---|---|---|---|---|
| ZONE | LTR | DESCRIPTION | DATE | APPROVED |
| | B | REVISED PER ECO #20380 | | |

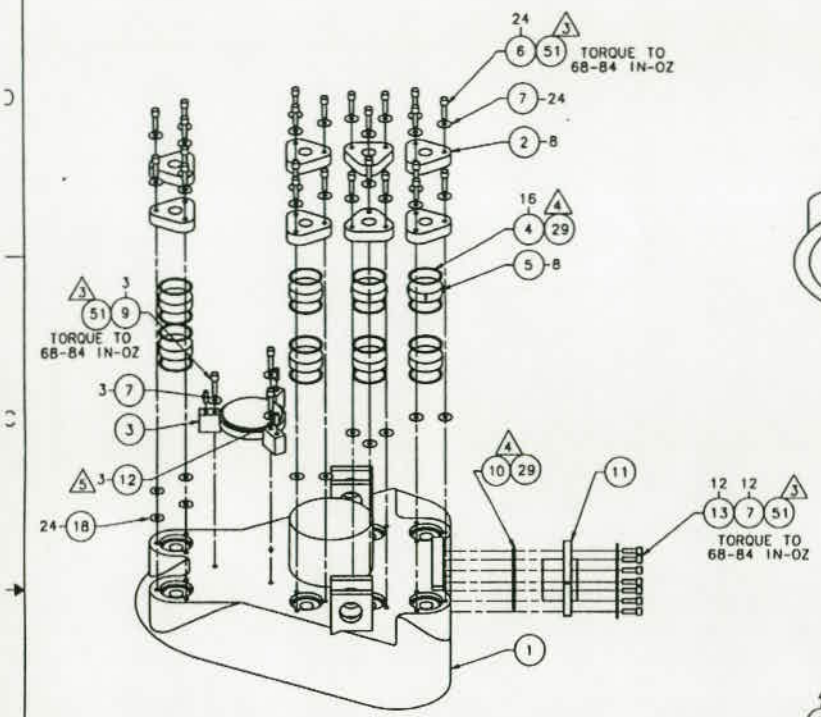


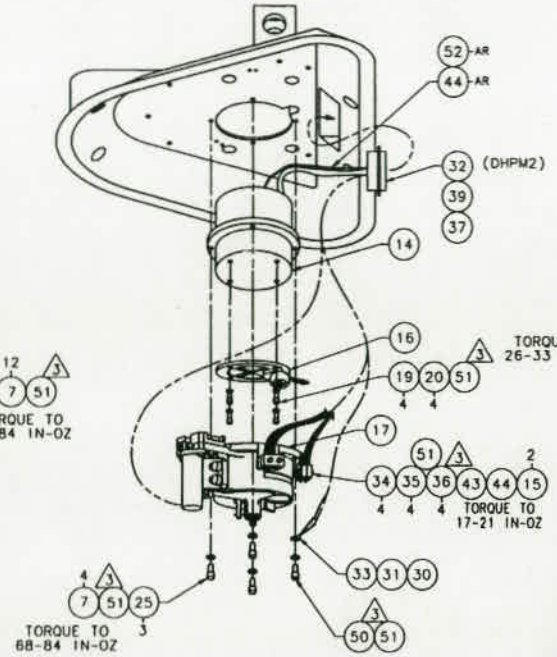


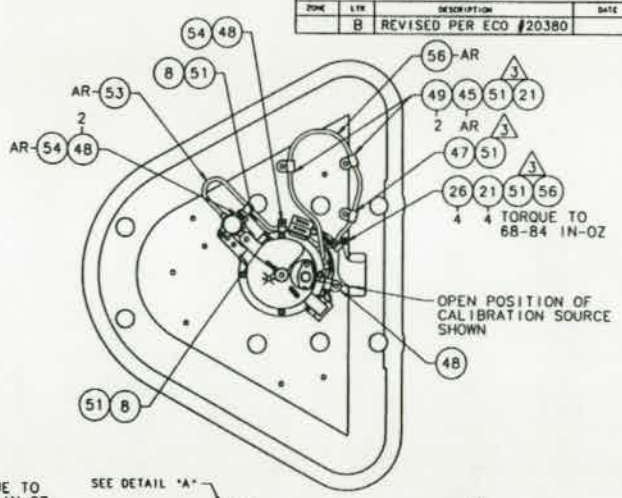


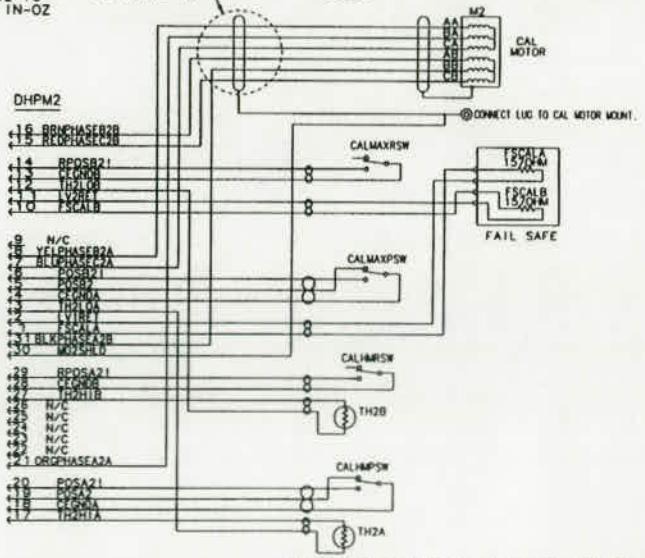


WIRING DIAGRAM

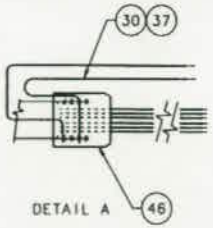


SEE SEPARATE PARTS LIST

NOTES:

1. MATERIAL: N/A
2. FINISH: N/A
3. STAKE HARDWARE USING ITEM 51 CURE AT ROOM TEMPERATURE FOR 1 HOUR.
4. LUBRICATE ITEM 4 AND ITEM 10 WITH ITEM 29 PRIOR TO INSTALLATION.
5. REMOVE JACKING SCREWS AFTER FINAL ASSEMBLY.
6. HANDLE ALL PARTS USING NON-POWDERED GLOVES.
7. ASSEMBLE PER P-HRC-528.
8. WIRE IN ACCORDANCE WITH P-HRC-320

REMOVE BURRS AND BREAK SHARP EDGES
UNLESS OTHERWISE SPECIFIED DIMENSIONS ARE IN INCHES
TOLERANCES ON FRACTIONS DECIMALS ANGLES
NEXT ASSY HRC-501

SMITHSONIAN ASTROPHYSICAL OBSERVATORY
CENTRAL ENGINEERING
CAMBRIDGE, MA.

DOOR ASSEMBLY

| SIZE | CODE IDENT NO. | DWG NO. | REV |
|---|---|---|---|
| D | 50944 | HRC-528 | B |
| SCALE 1/2 | IDEAS MS V2.1 | SHEET 1 OF 1 | |

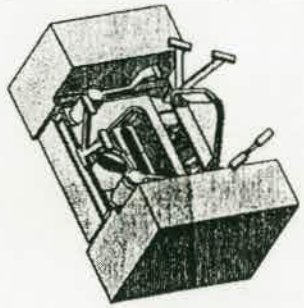

# HRC SHUTTER ASSEMBLY DESIGN

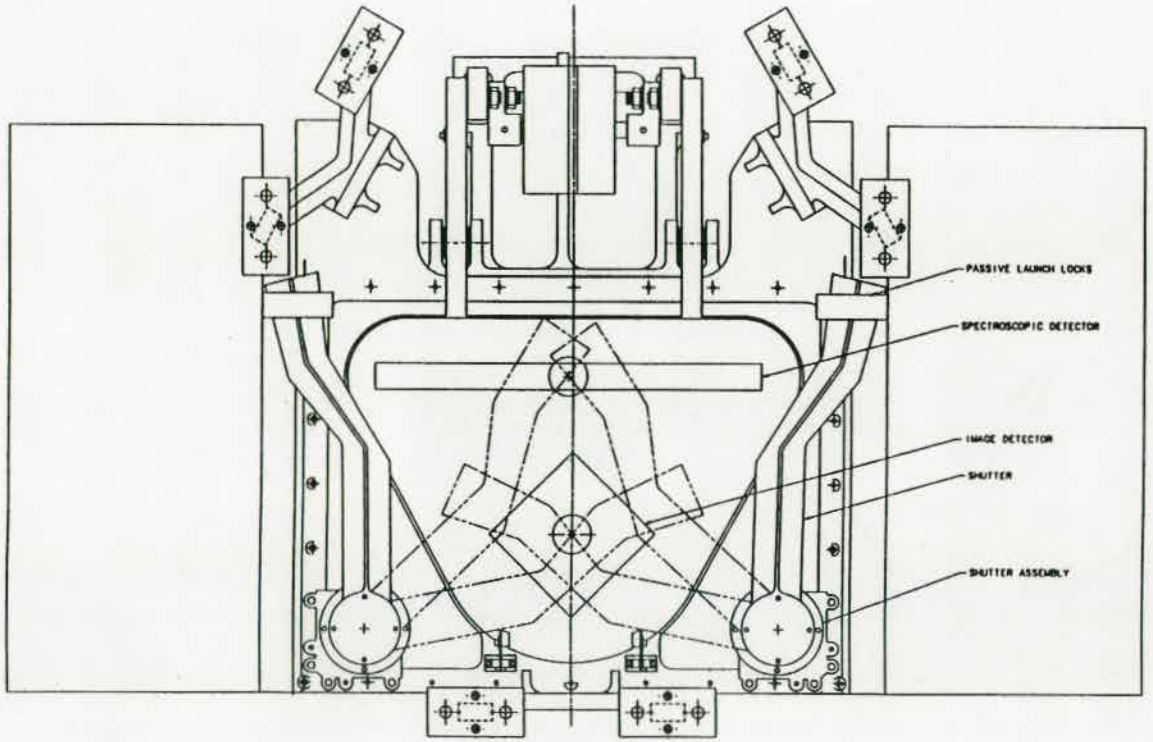


- HRC TOP VIEW -

- MULTI-POSITIONAL FOR EQUIVALENT FOCAULT KNIFE TEST AND FOCUS DETERMINATION
- SHUTTER BLADES: TITANIUM
- SHAEFFER MAGNETICS MOTORS
  TYPE 1 ACTUATOR
  13 IN-LBS
  REDUNDANTLY WOUND
- FAIL SAFE / CLUTCH MECHANISM

Ref. Dwg. HRC-500

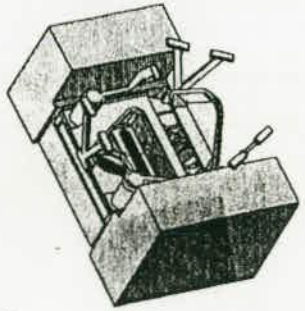

# HRC SHUTTER FAIL-SAFE DESIGN

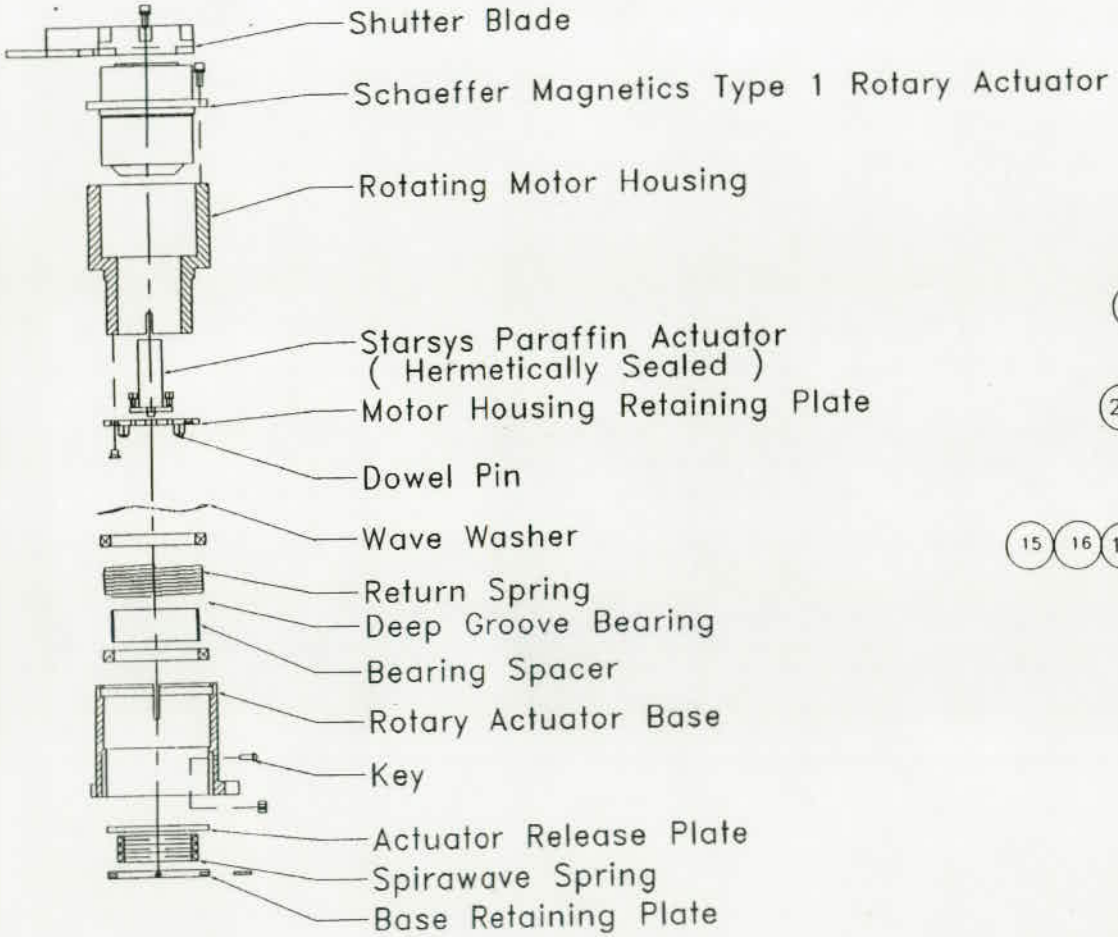


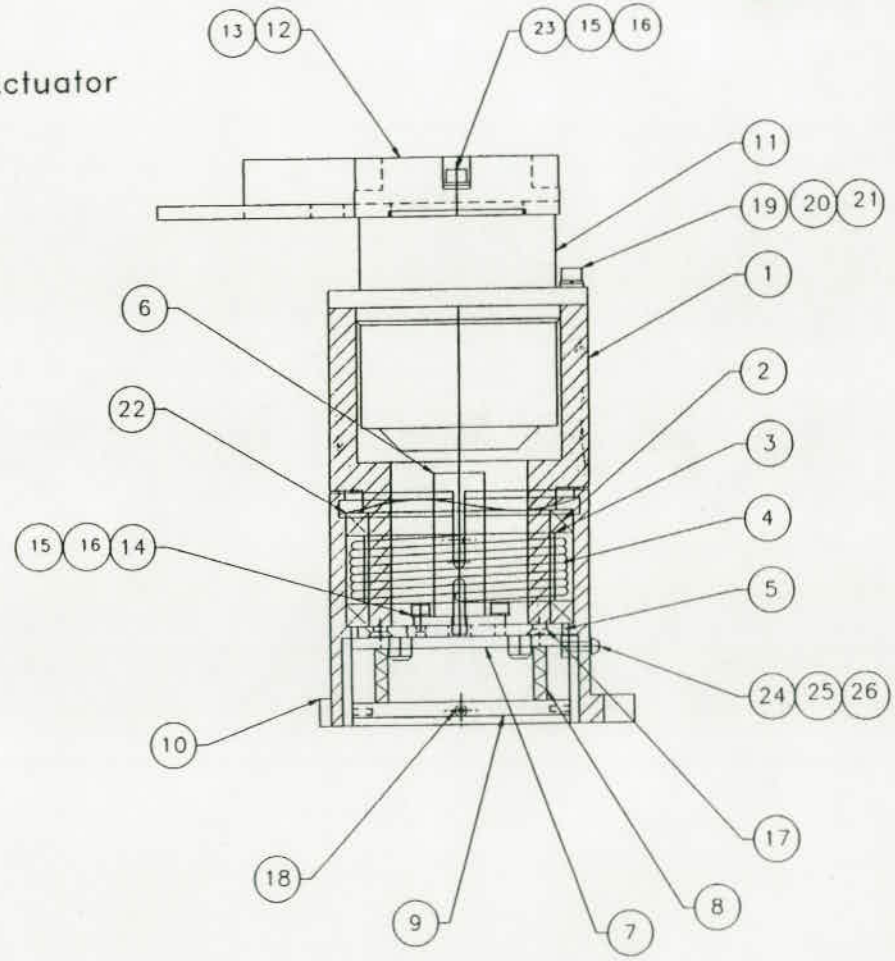


Ref. Dwg. HRC-536

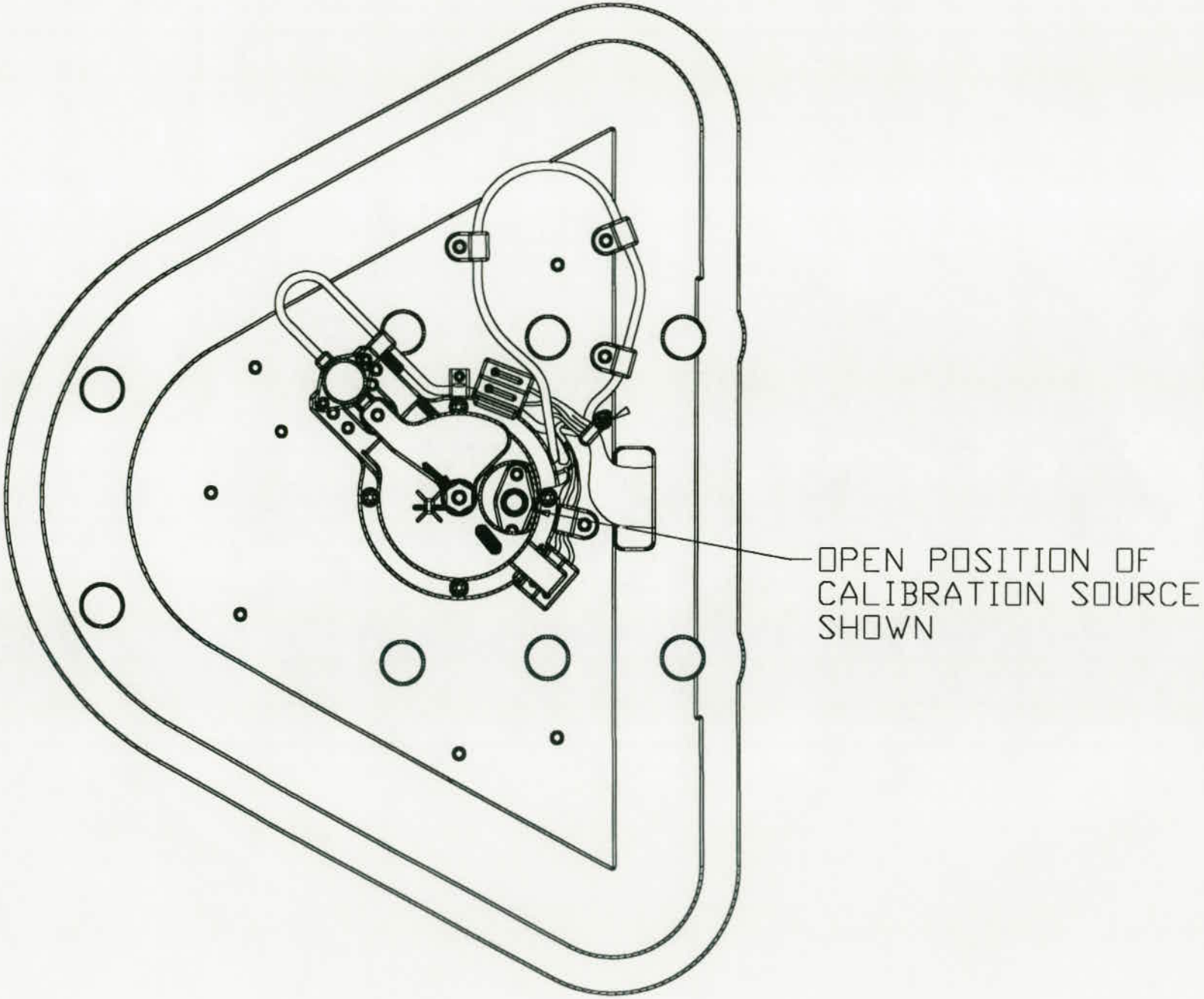
OPEN POSITION OF
CALIBRATION SOURCE
SHOWN

| REVISIONS | | | | |
|---|---|---|---|---|
| ZONE | LTR | DESCRIPTION | DATE | APPROVED |
| | E | REVISED PER ECO NO. 21294 | | |

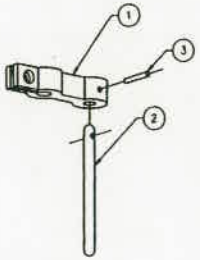


STEP 1

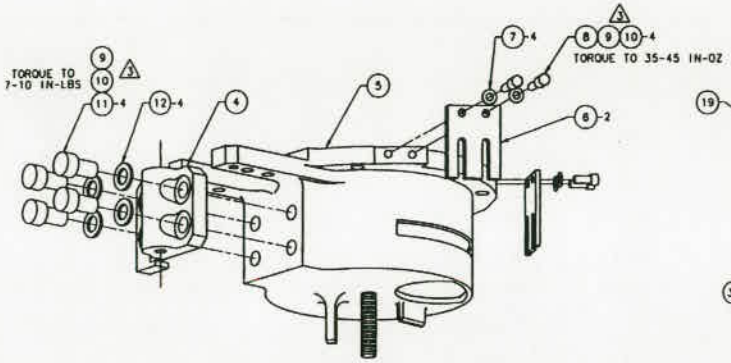


STEP 2

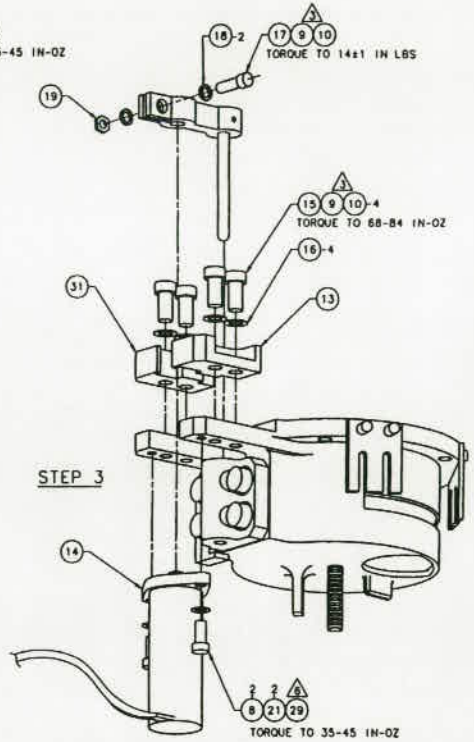


STEP 3

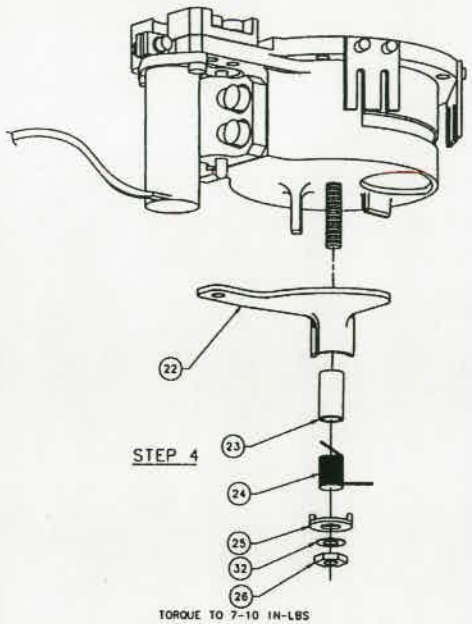


STEP 4

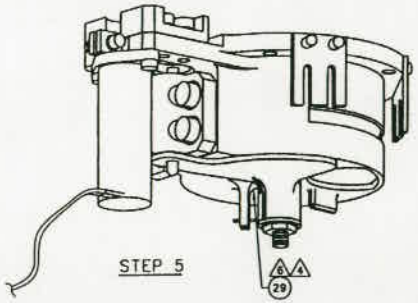


STEP 5

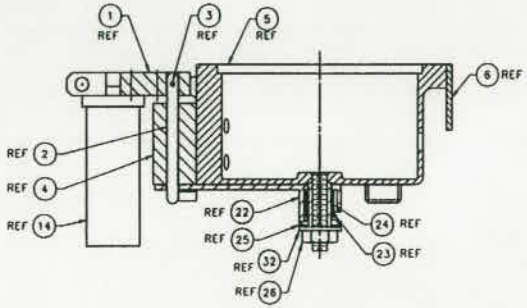


FULL SECTION OF ASSEMBLY

NOTES:

1. MATERIAL: N/A
2. FINISH: N/A
3. STAKE HARDWARE AFTER TORQUING USING ITEM 9 AND ITEM 10. MIX RATIO: 3 PBW OF ITEM 9 TO 2 PBW OF ITEM 10. CURE AT ROOM TEMPERATURE FOR 24 HOURS. OUTGAS FOR 10-15 MINUTES AT A PRESSURE $<10^{-2}$ TORR.
4. SET TORSION SPRING PRELOAD ANGLE AT APPROXIMATELY 270°.
5. HANDLE ALL PARTS USING NON-POWDERED GLOVES.
6. STAKE HARDWARE AFTER TORQUING USING ITEM 29. CURE AT ROOM TEMPERTURE FOR 1 HOUR.

SEE SEPARATE PARTS LIST

| | | | |
|---|---|---|---|
| REMOVE BURRS AND BREAK SHARP EDGES | DR J. SHAGE DATE 1-17-96 | CHK J.A. SHAW DATE 96-06-06 | SMITHSONIAN ASTROPHYSICAL OBSERVATORY CENTRAL ENGINEERING CAMBRIDGE, MA. |
| UNLESS OTHERWISE SPECIFIED DIMENSIONS ARE IN INCHES | BRKN APPD DATE | | |
| TOLERANCES ON FRACTIONS ±1/32 DECIMALS ±.005 ANGLES ±1° | BRCH APPD DATE | | ASSY, COVER, CALIBRATION |
| | CHKD APPD DATE | J. POLLIOTTI 06-07-96 | |
| MATL: 1 FIN: 2 | PROJ APPD DATE | JP FOR CM 06-07-96 | SIZE E / CODE IDENT NO. 50944 / DWG NO. HRC-602 / REV E |
| NEXT ASSY HRC-528 | CONTRACT | CM K. SHIELS 06-07-96 | SCALE 2/1 IDEAS MES SHEET 1 OF 1 |

| Shutter | Leading Edge Motor Steps | | Leading Edge HiByte | Leading Edge LoByte | Trailing Edge Motor Steps | | Trailing Edge HiByte | Trailing Edge LoByte |
|---|---|---|---|---|---|---|---|---|
| +Y | 1076 | 67.25° | 4 | 52 | 1259 | 78.6875° | 4 | 235 |
| -Y | 1020 | 63.75° | 3 | 252 | 1203 | 75.1875° | 4 | 179 |

For CAP 356

Step 4a
Shutter = POSY
High Byte = 4
Low Byte = 52

Step 4b
Shutter = NEGY
High Byte = 3
Low Byte = 252

Step 6
Shutter = POSY
High Byte = 4
Low Byte = 235

Step 8
Shutter = NEGY
High Byte = 4
Low Byte = 179

Step 10
Shutter = POSY
High Byte = 4
Low Byte = 52

+Y WIDTH
1259
1076
183 STEPS

-Y WIDTH
1203
-1020
183 STEPS

TABLE 1.5-1 TRANSLATION ACTUATOR SUMMARY INFORMATION

| | | | |
|---|---|---|---|
| Mechanism Description | Motor-driven gearbox with ball screw output. Gearbox mounted to Focus structure. Ballscrew engages ball nut mounted to Translation table. Translation table supported on Focus structure by 3 linear bearings. | | |
| Motor Description | Type: Brushless DC, 3-phase, delta connected, with integral brake and three integral Hall effect sensors evenly spaced.<br>Brake: Mating toothed disk type, rotating disk attached to motor shaft, stationary disk mounted on guide pins fixed to motor housing so it can slide. Stationary disk forced by springs against rotating disk. Stationary disk disengaged from rotating disk by applying current to solenoid winding. | | |
| Motor Data | Parameter | Primary Motor (side A) | Redundant Motor (side B) |
| | Torque Constant | CW(+) = 8.8 in-oz/amp<br>CCW(-) = 8.99 in-oz/amp | CW(+) = 8.69 in-oz/amp<br>CCW(-) = 8.89 in-oz/amp |
| | Back EMF | 0.0067 volt/rpm | 0.0065 volt/rpm |
| | Brake Coil Resistance | @20 deg C ≅ 185 ohms<br>@-50 deg C ≅ 137 ohms | @20 deg C ≅ 179 ohms<br>@-50 deg C ≅ 132 ohms |
| | Minimum Brake Release Voltage | @20 deg C = 18.3 Volts<br>@-50 deg C = 14.9 Volts | @20 deg C = 18.5 Volts<br>@-50 deg C = 15.7 Volts |
| Gearbox Description | Spur gear differential, allows either A or B motor to drive mechanism. Motor not driving must have its brake applied. Output of differential drives ball screw through final reduction gears. Materials: housing is titanium; gears are Carpenter custom 455 steel; bearings are 440C cres; lubricant for bearings is Bray 815Z oil with Bray 601 grease filling voids; lubricant for gears is Bray 601 grease with $MOS_2$ added. | | |
| Overall Gear Reduction | 112.246:1 | | |
| Ballscrew | Pitch = 0.2 inches; Diameter = 0.75 inches; RH thread | | |
| Motion Direction | CW motor rotation as viewed from shaft end of motor moves TT in +Z direction. | | |
| Motor Commutation Control | Controlled by SEA software. Software generates command for next commutation state based on lookup table and current state as sampled from Hall sensors. Command is sent to Motor Drive electronics board in SEA where it causes the power FETs connected to the motor windings to be switched to the correct pattern for the next commutation state. 18 commutation steps per motor revolution. Worst case (slowest) sample rated is 623.636 samples/sec. | | |
| Linear Traver Per Motor Step | 9.89887914E-05 inches per step<br>2.51431530E-06 meters per step | | |
| Brake Control | Brake is automatically controlled by software. Brake is normally applied. When a move is commanded a software-controlled sequence releases the brake at the beginning of the move and reapplies it at the end of the move. | | |
| Position Control | Position is controlled by software in the SEA. Commands to change position are absolute, the desired ± destination to nearest 8 motor steps is encoded in the command. Software designed to move motor to commanded position ±1 step. After a move is complete software does not sample or maintain position. Software's position knowledge must be synchronized with actual position after SEA power On, or if SEA power is cycled. See text for further information. | | |
| Position Reference | Three tabs mounted on Translation table, optical tab detector mounted on Focus structure. Middle tab (#2) used to auto resynch software position. | | |
| Motor Speed Control | Controlled by software. Motor speed is calculated by software based on time between Hall sensor state changes. Programmed speed limits are 2300 – 2900 rpm. Control method is change of duty cycle of the pulse-width modulated (PWM) signal that is applied to the gates of the motor winding power FETs. | | |
| Motor Overcurrent Protection | Motor current > 1 amp (design) causes hardware to automatically disable motor power until current falls below limit, then re-enables power. Software senses overcurrents if they occur and reduces PWM level until they stop. | | |
| Hall Sensor Output | 18 state changes (Hall steps) per motor revolution. 1 Hall step = 1 motor step. | | |

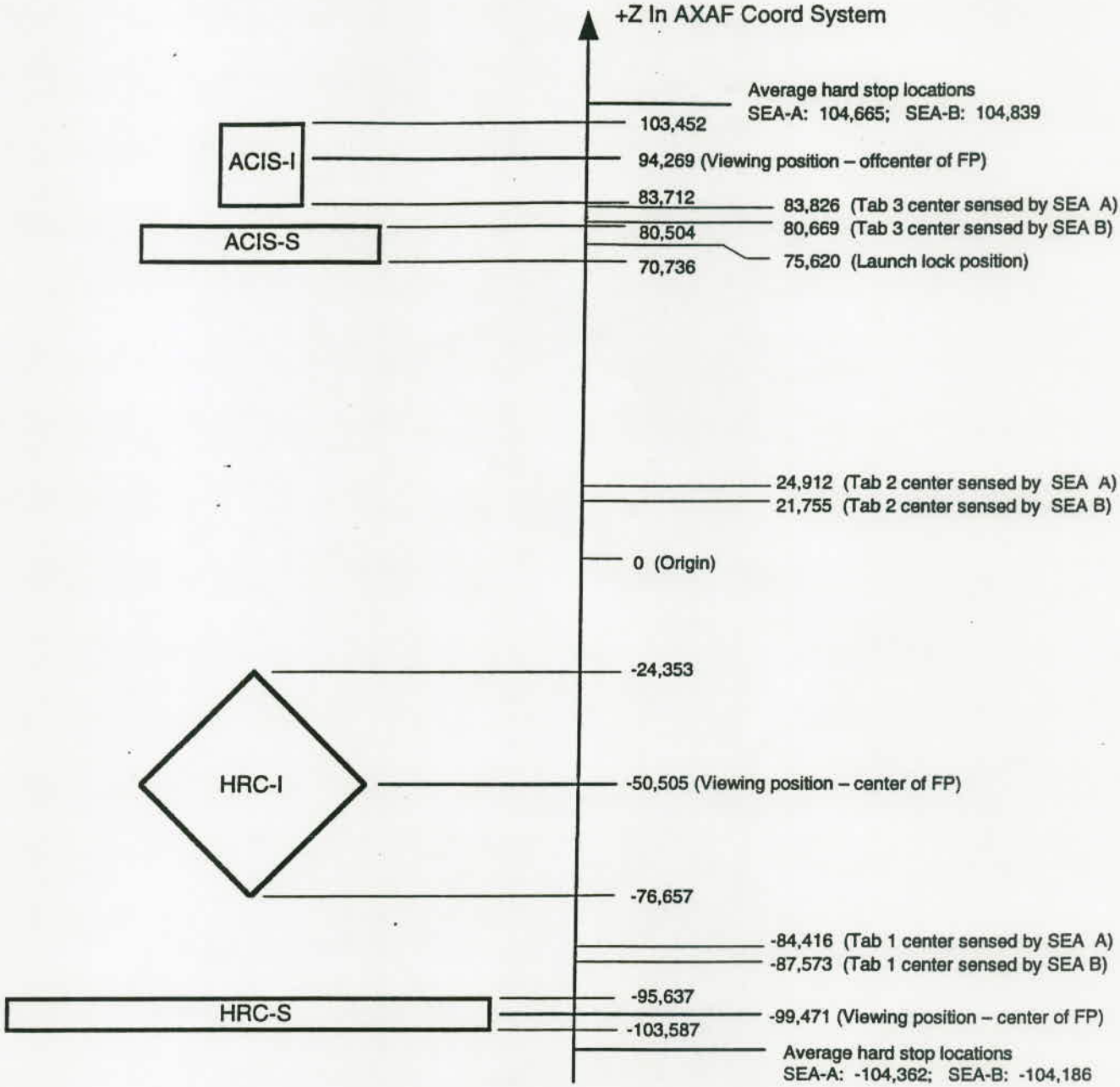


**Figure 2.4-2 Nominal Translating Science Compartment (TSC) Positions (not to scale)**

Positions are measured in the coordinate system and units used for SEA commands and telemetry. Locations of the ACIS and HRC detectors are calculated from TRW interface drawing 301438. Average hard stop locations are based on ground test data at cold and hot temperature extremes.

TABLE 1.5-2 FOCUS ACTUATOR MECHANISM SUMMARY INFORMATION

| | | | |
|---|---|---|---|
| Mechanism Description | Motor-driven gearbox output drives approx. 17" dia. ring via sector gear. Three pushrods attached to ring actuate levers which raise or lower the lower attach point of three flexures that structurally attach the ISIM to the OBA. | | |
| Motor Description | Identical to Translation motors. | | |
| Motor Data | Parameter | Primary Motor (side A) | Redundant Motor (side B) |
| | Torque Constant | CW = 8.8 in-oz/amp<br>CCW = 8.6 in-oz/amp | CW(+) = 8.69 in-oz/amp<br>CCW(-) = 8.89 in-oz/amp |
| | Back EMF | 0.0064 volt/rpm | 0.0065 volt/rpm |
| | Brake Coil Resistance | @20 deg C ≅ 175 ohms<br>@-50 deg C ≅ 136 ohms | @20 deg C ≅ 175 ohms<br>@-50 deg C ≅ 127 ohms |
| | Minimum Brake Release Voltage | @20 deg C = 18 Volts<br>@-50 deg C = 13.1 Volts | @20 deg C ≅ 17.3 Volts<br>@-50 deg C = 13.3 Volts |
| Gearbox Description | Same as Translation except for different housing configuration and lower output gear reduction. | | |
| Overall Gear Reduction | Motor shaft to output ring: 6081.559:1 | | |
| Motion Direction | CW motor rotation as viewed from shaft end of motor moves focal planes in the +X direction. | | |
| Motor Commutation Control | Same as Translation. | | |
| Linear Travel Per Motor Step | $X = 5.82311E\text{-}5 \times S + 1.40643E\text{-}9 \times S^2 - 4.27136E\text{-}14 \times S^3 + 1.56708E\text{-}18 \times S^4 + 2.084E\text{-}22 \times S^5 + 4.016E\text{-}27 \times S^6$ (where S = motor steps, X is in inches) Refer to Table 1.5-3 for Focus position in steps vs. focal plane position in inches and meters. | | |
| Brake Control | Same as Translation. | | |
| Position Control | Same as Translation, except range of Focus mechanism permits move command resolution of 1 step vs. 8 steps for Translation. | | |
| Position Reference | Three tabs mounted on output ring, optical tab detector mounted on output ring cover. Middle tab (#2) used to auto resynch software position. | | |
| Motor Speed Control | Same as Translation except programmed motor speed limits are 100 – 600 rpm. | | |
| Motor Overcurrent Protection | Same as Translation. | | |
| Hall Sensor Output | 18 state changes (Hall steps) per motor revolution. | | |

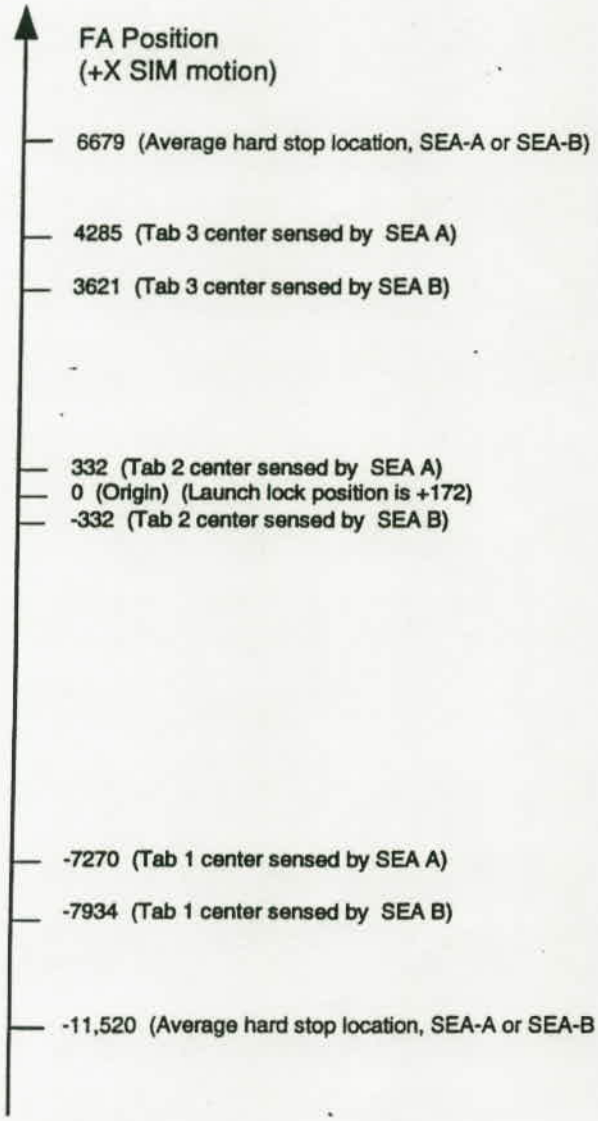


**Figure 2.4-3 Nominal Focus Mechanism Positions (not to scale)**

Positions are measured in the coordinate system and units used for SEA commands and telemetry. Average hard stop locations are based on ground test data at hot and cold temperature extremes.

TABLE 1.5-3 SIM FOCUS POSITION, MOTOR STEPS VS. INCHES AND METERS

| Focus Motor Steps | Focus Position, Inches | Focus Position, Meters | Focus Motor Steps | Focus Position, Inches | Focus Position, Meters | Focus Motor Steps | Focus Position, Inches | Focus Position, Meters | Focus Motor Steps | Focus Position, Inches | Focus Position, Meters |
|---|---|---|---|---|---|---|---|---|---|---|---|
| 0 | 0 | 0 | 4400 | 0.280767 | 0.007131 | -2400 | -0.13103 | -0.00333 | -6800 | -0.31679 | -0.00805 |
| 100 | 0.005837 | 0.000148 | 4500 | 0.287688 | 0.007307 | -2500 | -0.13608 | -0.00346 | -6900 | -0.32008 | -0.00813 |
| 200 | 0.011702 | 0.000297 | 4600 | 0.294634 | 0.007484 | -2600 | -0.14109 | -0.00358 | -7000 | -0.32332 | -0.00821 |
| 300 | 0.017595 | 0.000447 | 4700 | 0.301605 | 0.007661 | -2700 | -0.14608 | -0.00371 | -7100 | -0.32652 | -0.00829 |
| 400 | 0.023515 | 0.000597 | 4800 | 0.308602 | 0.007838 | -2800 | -0.15102 | -0.00384 | -7200 | -0.32967 | -0.00837 |
| 500 | 0.029462 | 0.000748 | 4900 | 0.315623 | 0.008017 | -2900 | -0.15593 | -0.00396 | -7300 | -0.33278 | -0.00845 |
| 600 | 0.035436 | 0.0009 | 5000 | 0.32267 | 0.008196 | -3000 | -0.1608 | -0.00408 | -7400 | -0.33585 | -0.00853 |
| 700 | 0.041437 | 0.001052 | 5100 | 0.329744 | 0.008375 | -3100 | -0.16564 | -0.00421 | -7500 | -0.33887 | -0.00861 |
| 800 | 0.047464 | 0.001206 | 5200 | 0.336843 | 0.008556 | -3200 | -0.17044 | -0.00433 | -7600 | -0.34185 | -0.00868 |
| 900 | 0.053517 | 0.001359 | 5300 | 0.343969 | 0.008737 | -3300 | -0.1752 | -0.00445 | -7700 | -0.34479 | -0.00876 |
| 1000 | 0.059597 | 0.001514 | 5400 | 0.351123 | 0.008919 | -3400 | -0.17993 | -0.00457 | -7800 | -0.34768 | -0.00883 |
| 1100 | 0.065702 | 0.001669 | 5500 | 0.358303 | 0.009101 | -3500 | -0.18462 | -0.00469 | -7900 | -0.35052 | -0.0089 |
| 1200 | 0.071833 | 0.001825 | 5600 | 0.365511 | 0.009284 | -3600 | -0.18927 | -0.00481 | -8000 | -0.35333 | -0.00897 |
| 1300 | 0.077989 | 0.001981 | 5700 | 0.372748 | 0.009468 | -3700 | -0.19388 | -0.00492 | -8100 | -0.35608 | -0.00904 |
| 1400 | 0.08417 | 0.002138 | 5800 | 0.380013 | 0.009652 | -3800 | -0.19845 | -0.00504 | -8200 | -0.3588 | -0.00911 |
| 1500 | 0.090377 | 0.002296 | 5900 | 0.387307 | 0.009838 | -3900 | -0.20299 | -0.00516 | -8300 | -0.36146 | -0.00918 |
| 1600 | 0.096608 | 0.002454 | 6000 | 0.394631 | 0.010024 | -4000 | -0.20748 | -0.00527 | -8400 | -0.36409 | -0.00925 |
| 1700 | 0.102864 | 0.002613 | 6100 | 0.401985 | 0.01021 | -4100 | -0.21194 | -0.00538 | -8500 | -0.36667 | -0.00931 |
| 1800 | 0.109144 | 0.002772 | 6200 | 0.409369 | 0.010398 | -4200 | -0.21636 | -0.0055 | -8600 | -0.36921 | -0.00938 |
| 1900 | 0.115449 | 0.002932 | 6300 | 0.416785 | 0.010586 | -4300 | -0.22074 | -0.00561 | -8700 | -0.3717 | -0.00944 |
| 2000 | 0.121778 | 0.003093 | 6400 | 0.424232 | 0.010775 | -4400 | -0.22508 | -0.00572 | -8800 | -0.37415 | -0.0095 |
| 2100 | 0.128131 | 0.003255 | -100 | -0.00581 | -0.00015 | -4500 | -0.22938 | -0.00583 | -8900 | -0.37655 | -0.00956 |
| 2200 | 0.134509 | 0.003417 | -200 | -0.01159 | -0.00029 | -4600 | -0.23363 | -0.00593 | -9000 | -0.37891 | -0.00962 |
| 2300 | 0.14091 | 0.003579 | -300 | -0.01734 | -0.00044 | -4700 | -0.23785 | -0.00604 | -9100 | -0.38123 | -0.00968 |
| 2400 | 0.147335 | 0.003742 | -400 | -0.02306 | -0.00059 | -4800 | -0.24203 | -0.00615 | -9200 | -0.3835 | -0.00974 |
| 2500 | 0.153783 | 0.003906 | -500 | -0.02876 | -0.00073 | -4900 | -0.24617 | -0.00625 | -9300 | -0.38573 | -0.0098 |
| 2600 | 0.160255 | 0.00407 | -600 | -0.03442 | -0.00087 | -5000 | -0.25026 | -0.00636 | -9400 | -0.38791 | -0.00985 |
| 2700 | 0.166751 | 0.004235 | -700 | -0.04006 | -0.00102 | -5100 | -0.25432 | -0.00646 | -9500 | -0.39005 | -0.00991 |
| 2800 | 0.17327 | 0.004401 | -800 | -0.04566 | -0.00116 | -5200 | -0.25833 | -0.00656 | -9600 | -0.39215 | -0.00996 |
| 2900 | 0.179812 | 0.004567 | -900 | -0.05124 | -0.0013 | -5300 | -0.26231 | -0.00666 | -9700 | -0.3942 | -0.01001 |
| 3000 | 0.186378 | 0.004734 | -1000 | -0.05678 | -0.00144 | -5400 | -0.26624 | -0.00676 | -9800 | -0.39622 | -0.01006 |
| 3100 | 0.192968 | 0.004901 | -1100 | -0.06229 | -0.00158 | -5500 | -0.27012 | -0.00686 | -9900 | -0.39818 | -0.01011 |
| 3200 | 0.19958 | 0.005069 | -1200 | -0.06778 | -0.00172 | -5600 | -0.27397 | -0.00696 | -10000 | -0.40011 | -0.01016 |
| | | | | | | -5680 | -0.27702 | -0.00704 | | | |
| 3300 | 0.206216 | 0.005238 | -1300 | -0.07323 | -0.00186 | -5700 | -0.27777 | -0.00706 | -10100 | -0.40199 | -0.01021 |
| 3400 | 0.212876 | 0.005407 | -1400 | -0.07864 | -0.002 | -5800 | -0.28154 | -0.00715 | -10200 | -0.40383 | -0.01026 |
| 3500 | 0.219558 | 0.005577 | -1500 | -0.08403 | -0.00213 | -5900 | -0.28525 | -0.00725 | -10300 | -0.40562 | -0.0103 |
| 3600 | 0.226264 | 0.005747 | -1600 | -0.08939 | -0.00227 | -6000 | -0.28893 | -0.00734 | -10400 | -0.40738 | -0.01035 |
| 3700 | 0.232994 | 0.005918 | -1700 | -0.09471 | -0.00241 | -6100 | -0.29256 | -0.00743 | -10500 | -0.40909 | -0.01039 |
| 3800 | 0.239747 | 0.00609 | -1800 | -0.1 | -0.00254 | -6200 | -0.29616 | -0.00752 | -10600 | -0.41076 | -0.01043 |
| 3900 | 0.246524 | 0.006262 | -1900 | -0.10525 | -0.00267 | -6300 | -0.2997 | -0.00761 | -10700 | -0.41239 | -0.01047 |
| 4000 | 0.253325 | 0.006434 | -2000 | -0.11048 | -0.00281 | -6400 | -0.30321 | -0.0077 | -10800 | -0.41397 | -0.01051 |
| 4100 | 0.260149 | 0.006608 | -2100 | -0.11567 | -0.00294 | -6500 | -0.30667 | -0.00779 | -10900 | -0.41551 | -0.01055 |
| 4200 | 0.266998 | 0.006782 | -2200 | -0.12082 | -0.00307 | -6600 | -0.31009 | -0.00788 | -11000 | -0.41702 | -0.01059 |
| 4300 | 0.27387 | 0.006956 | -2300 | -0.12594 | -0.0032 | -6700 | -0.31346 | -0.00796 | | | |
| -500 | -0.02876 | -0.00073 | -125 | -0.00726 | -0.00018 | 225 | 0.013173 | 0.000335 | 600 | 0.035436 | 0.0009 |
| -475 | -0.02734 | -0.00069 | -100 | -0.00581 | -0.00015 | 250 | 0.014645 | 0.000372 | 625 | 0.036934 | 0.000938 |
| -450 | -0.02592 | -0.00066 | -75 | -0.00436 | -0.00011 | 275 | 0.016119 | 0.000409 | 650 | 0.038433 | 0.000976 |
| -425 | -0.02449 | -0.00062 | -50 | -0.00291 | -7.4E-05 | 300 | 0.017595 | 0.000447 | 675 | 0.039934 | 0.001014 |
| -400 | -0.02306 | -0.00059 | -25 | -0.00145 | -3.7E-05 | 325 | 0.019072 | 0.000484 | 700 | 0.041437 | 0.001052 |
| -375 | -0.02164 | -0.00055 | 0 | 0 | 0 | 350 | 0.020551 | 0.000522 | 725 | 0.042941 | 0.001091 |
| -350 | -0.02021 | -0.00051 | 25 | 0.001457 | 3.7E-05 | 375 | 0.022032 | 0.00056 | 750 | 0.044447 | 0.001129 |
| -325 | -0.01878 | -0.00048 | 50 | 0.002915 | 7.4E-05 | 400 | 0.023515 | 0.000597 | 775 | 0.045955 | 0.001167 |
| -300 | -0.01734 | -0.00044 | 75 | 0.004375 | 0.000111 | 425 | 0.024999 | 0.000635 | 800 | 0.047464 | 0.001206 |
| -275 | -0.01591 | -0.0004 | 100 | 0.005837 | 0.000148 | 450 | 0.026485 | 0.000673 | 825 | 0.048975 | 0.001244 |
| -250 | -0.01447 | -0.00037 | 125 | 0.007301 | 0.000185 | 475 | 0.027973 | 0.000711 | 850 | 0.050487 | 0.001282 |
| -225 | -0.01303 | -0.00033 | 150 | 0.008766 | 0.000223 | 500 | 0.029462 | 0.000748 | 875 | 0.052001 | 0.001321 |
| -200 | -0.01159 | -0.00029 | 172 | 0.010057 | 0.000255 | 525 | 0.030953 | 0.000786 | 900 | 0.053517 | 0.001359 |
| -175 | -0.01015 | -0.00026 | 175 | 0.010233 | 0.00026 | 550 | 0.032446 | 0.000824 | 925 | 0.055035 | 0.001398 |
| -150 | -0.0087 | -0.00022 | 200 | 0.011702 | 0.000297 | 575 | 0.03394 | 0.000862 | 950 | 0.056554 | 0.001436 |

Organization:


**Smithsonian Astrophysical Observatory**

60 Garden St.
Cambridge MA, 02310


Program/Project:

**Chandra**

**High Resolution Camera**

Title:

# CHAPTER

# HRC Module SN

| | | | |
|---|---|---|---|
| **Project** | HRC | **Start Date:Time:** | |
| **Document Type** | Scanned Document | **End Date:Time:** | |
| **File** | hrc.poc.proc.ops.tex | **Test Conductor:** | |
| **Revision** | *Rev* | | |
| **Prepared By** | | | |
| **Make Date** | January 17, 2013 | | |

Document Configuration Management Information:

HRC ELECTRONIC BOARD SERIAL NUMBERS

April 11, 1997 at 11:26 a.m. 

| SLOT_NO | BD_PART_NO | BD_NAME | SIDE | BD_SERIAL_NO |
|---|---|---|---|---|
| CEAJ01 | HRC-OV5250 | U COARSE POSITION | A | 05 |
| CEAJ02 | HRC-OV5250 | U COARSE POSITION | B | 03 |
| CEAJ03 | HRC-OV5250 | V COARSE POSITION | A | 01 |
| CEAJ04 | HRC-OV5250 | V COARSE POSITION | B | 02 |
| CEAJ05 | HRC-OV5265 | ANALOG/DIGITAL HOUSEKEEPING | A | 02 |
| CEAJ06 | HRC-OV5265 | ANALOG/DIGITAL HOUSEKEEPING | B | 01 |
| CEAJ07 | HRC-OV5262 | FIFO AND VALIDITY | A | 01 |
| CEAJ08 | HRC-OV5262 | FIFO AND VALIDITY | B | 02 |
| CEAJ09 | HRC-OV5254 | SEQUENCER | A | 01 |
| CEAJ10 | HRC-OV5254 | SEQUENCER | B | 02 |
| CEAJ11 | HRC-OV5259 | SECONDARY SCIENCE COUNTERS | A | 01 |
| CEAJ12 | HRC-OV5259 | SECONDARY SCIENCE COUNTERS | B | 02 |
| CEAJ13 | SPARE | | A | |
| CEAJ14 | SPARE | | B | |
| CEAJ15 | HRC-OV5270 | POWER SUPPLY CONTROL | A | 02 |
| CEAJ16 | HRC-OV5270 | POWER SUPPLY CONTROL | B | 01 |
| CEAJ17 | HRC-OV5272 | MOTOR CONTROLLER | A | 01 |
| CEAJ18 | HRC-OV5272 | MOTOR CONTROLLER | B | 02 |
| CEAJ19 | HRC-OV5271 | MOTOR DRIVER | A | 01 |
| CEAJ20 | HRC-OV5271 | MOTOR DRIVER | B | 02 |
| CEAJ21 | HRC-OV5274 | MOTOR SELECT | A | 01 |
| CEAJ22 | HRC-OV5274 | MOTOR SELECT | B | 02 |
| CEAJ23 | NOT USED | | | |

| SLOT_NO | BD_PART_NO | BD_NAME | SIDE | BD_SERIAL_NO |
|---|---|---|---|---|
| CEAJ24 | NOT USED | | | |
| CEAJ25 | SPARE | | | |
| CEAJ26 | SPARE | | | |
| CEAJ27 | HRC-OV5261 | SERIAL COMMAND DECODER | A | 01 |
| CEAJ28 | HRC-OV5261 | SERIAL COMMAND DECODER | B | 02 |
| CEAJ29 | HRC-OV5264 | FLIGHT INTERFACE | A | 02 |
| CEAJ30 | HRC-OV5264 | FLIGHT INTERFACE | B | 03 |
| FEAJ01 | HRC-OV5256 | OCTAL HYBRID PREAMP | A | 14 |
| FEAJ02 | HRC-OV5256 | OCTAL HYBRID PREAMP | B | 12 |
| FEAJ03 | HRC-OV5256 | OCTAL HYBRID PREAMP | A | 08 |
| FEAJ04 | HRC-OV5256 | OCTAL HYBRID PREAMP | B | 01 |
| FEAJ05 | HRC-OV5256 | OCTAL HYBRID PREAMP | A | 04 |
| FEAJ06 | HRC-OV5256 | OCTAL HYBRID PREAMP | B | 02 |
| FEAJ07 | HRC-OV5256 | OCTAL HYBRID PREAMP | A | 10 |
| FEAJ08 | HRC-OV5256 | OCTAL HYBRID PREAMP | B | 16 |
| FEAJ09 | HRC-OV5256 | OCTAL HYBRID PREAMP | A | 03 |
| FEAJ10 | HRC-OV5256 | OCTAL HYBRID PREAMP | B | 13 |
| FEAJ11 | HRC-OV5256 | OCTAL HYBRID PREAMP | A | 07 |
| FEAJ12 | HRC-OV5256 | OCTAL HYBRID PREAMP | B | 09 |
| FEAJ13 | HRC-OV5256 | OCTAL HYBRID PREAMP | A | 11 |
| FEAJ14 | HRC-OV5256 | OCTAL HYBRID PREAMP | B | 15 |
| FEAJ15 | HRC-OV5256 | OCTAL HYBRID PREAMP | A | 05 |
| FEAJ16 | HRC-OV5256 | OCTAL HYBRID PREAMP | B | 06 |
| FEAJ17 | HRC-OV5253 | FINE POSITION MUX | A | 02 |

| SLOT_NO | BD_PART_NO | BD_NAME | SIDE | BD_SERIAL_NO |
|---|---|---|---|---|
| FEAJ18 | HRC-OV5253 | FINE POSITION MUX | B | 05 |
| FEAJ19 | HRC-OV5253 | FINE POSITION MUX | A | 03 |
| FEAJ20 | HRC-OV5253 | FINE POSITION MUX | B | 01 |
| FEAJ21 | HRC-OV5263 | TRIGGER COMPARATOR | A | 02 |
| FEAJ22 | HRC-OV5263 | TRIGGER COMPARATOR | B | 01 |
| FEAJ23 | HRC-OV5251 | V TRIGGER COMPARATOR | A | 02 |
| FEAJ24 | HRC-OV5251 | V TRIGGER COMPARATOR | B | 01 |
| FEAJ25 | HRC-OV5255 | PULSE HEIGHT ANALYZER | A | 01 |
| FEAJ26 | HRC-OV5255 | PULSE HEIGHT ANALYZER | B | 02 |
| FEAJ27 | NOT USED | | | |
| FEAJ28 | NOT USED | | | |
| FEAJ29 | HRC-OV5268 | MCP PREAMPS | A | 01 |
| FEAJ30 | HRC-OV5268 | MCP PREAMPS | B | 02 |
| FEAJ31 | HRC-OV5257 | U A/DC | A | 03 |
| FEAJ32 | HRC-OV5257 | U A/DC | B | 04 |
| FEAJ33 | HRC-OV5258 | V A/DC | A | 01 |
| FEAJ34 | HRC-OV5258 | V A/DC | B | 02 |

TOTALS:

Printed 64 of the 64 records.

PRIMARY SORT FIELD: SLOT_NO

SELECTION CRITERIA:

All records

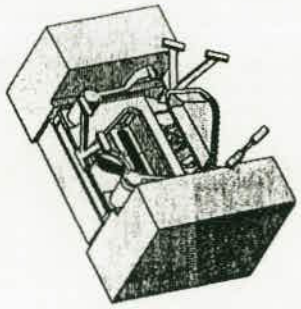

# HIGH RESOLUTION CAMERA FEATURES

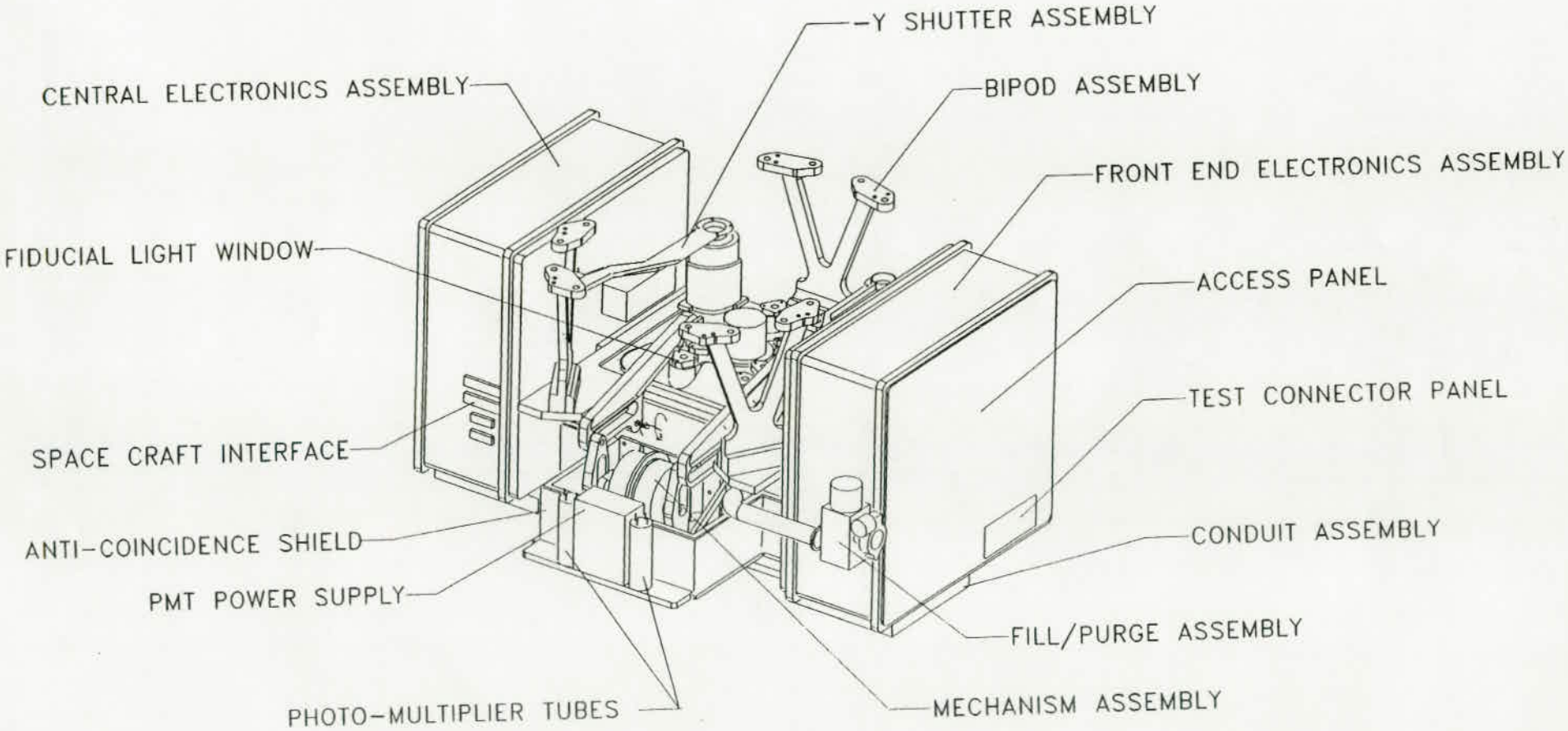


Ref. Dwg. HRC-500

# HIGH RESOLUTION CAMERA ASSEMBLY

## DETECTOR HOUSING

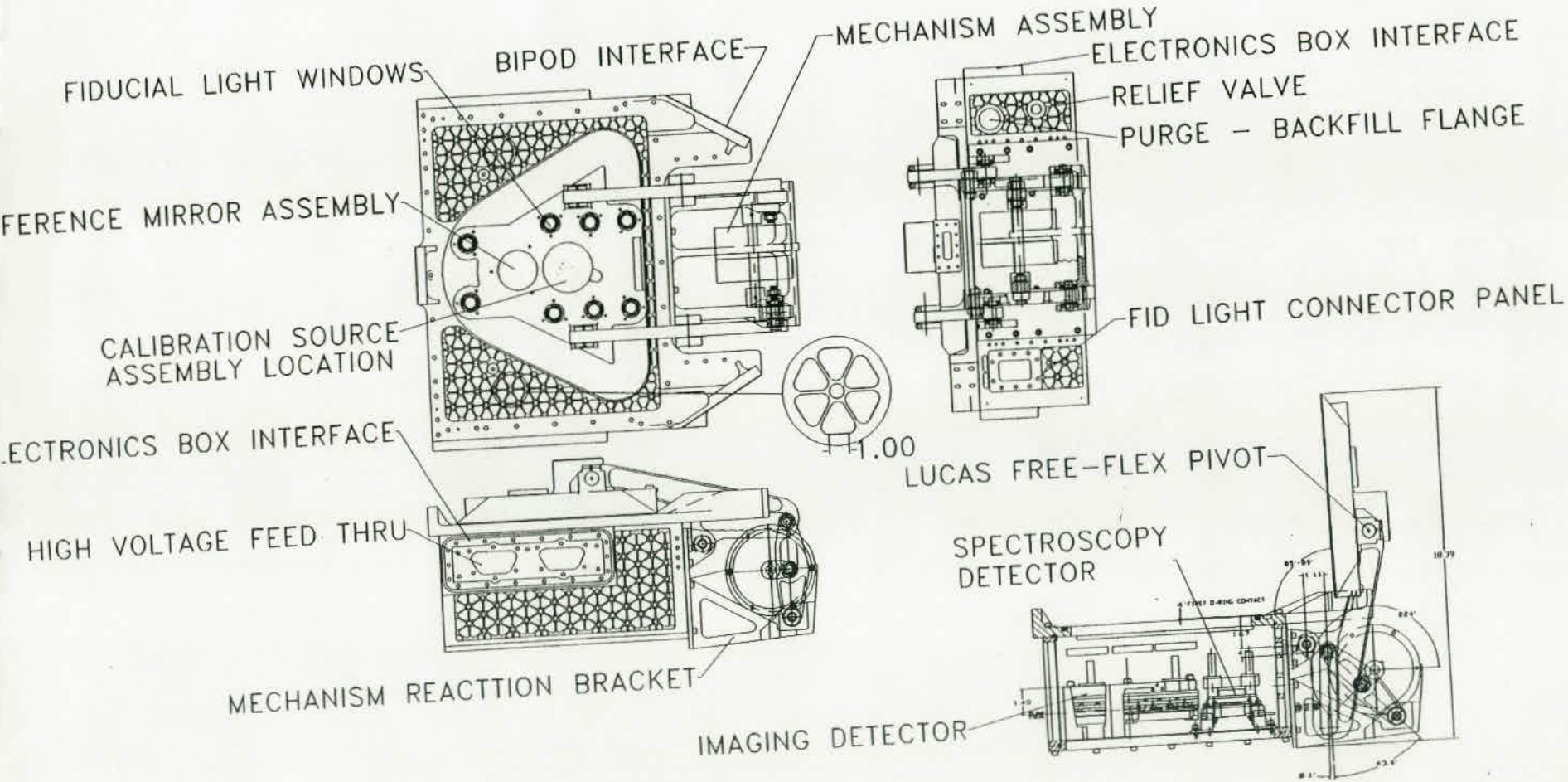


Ref. Dwg. HRC-500

3D-JP-7

Organization:


**Smithsonian Astrophysical Observatory**

60 Garden St.
Cambridge MA, 02310


Program/Project:

**Chandra**

**High Resolution Camera**

Title:

# CHAPTER

# HRC Misc

| | | | |
|---|---|---|---|
| **Project** | HRC | **Start Date:Time:** | |
| **Document Type** | Scanned Document | **End Date:Time:** | |
| **File** | hrc.poc.proc.ops.tex | **Test Conductor:** | |
| **Revision** | *Rev* | | |
| **Prepared By** | | | |
| **Make Date** | January 17, 2013 | | |

Document Configuration Management Information:

| DOY | DATE | DOY | DATE | DOY | DATE | DOY | DATE | DOY | DATE | DOY | DATE |
|---|---|---|---|---|---|---|---|---|---|---|---|
| 1 | 01JAN | 62 | 03MAR | 123 | 03MAY | 184 | 03JUL | 245 | 02SEP | 306 | 02NOV |
| 2 | 02 | 63 | 04 | 124 | 04 | 185 | 04 | 246 | 03 | 307 | 03 |
| 3 | 03 | 64 | 05 | 125 | 05 | 186 | 05 | 247 | 04 | 308 | 04 |
| 4 | 04 | 65 | 06 | 126 | 06 | 187 | 06 | 248 | 05 | 309 | 05 |
| 5 | 05 | 66 | 07 | 127 | 07 | 188 | 07 | 249 | 06 | 310 | 06 |
| 6 | 06 | 67 | 08 | 128 | 08 | 189 | 08 | 250 | 07 | 311 | 07 |
| 7 | 07 | 68 | 09 | 129 | 09 | 190 | 09 | 251 | 08 | 312 | 08 |
| 8 | 08 | 69 | 10 | 130 | 10 | 191 | 10 | 252 | 09 | 313 | 09 |
| 9 | 09 | 70 | 11 | 131 | 11 | 192 | 11 | 253 | 10 | 314 | 10 |
| 10 | 10 | 71 | 12 | 132 | 12 | 193 | 12 | 254 | 11 | 315 | 11 |
| 11 | 11 | 72 | 13 | 133 | 13 | 194 | 13 | 255 | 12 | 316 | 12 |
| 12 | 12 | 73 | 14 | 134 | 14 | 195 | 14 | 256 | 13 | 317 | 13 |
| 13 | 13 | 74 | 15 | 135 | 15 | 196 | 15 | 257 | 14 | 318 | 14 |
| 14 | 14 | 75 | 16 | 136 | 16 | 197 | 16 | 258 | 15 | 319 | 15 |
| 15 | 15 | 76 | 17 | 137 | 17 | 198 | 17 | 259 | 16 | 320 | 16 |
| 16 | 16 | 77 | 18 | 138 | 18 | 199 | 18 | 260 | 17 | 321 | 17 |
| 17 | 17 | 78 | 19 | 139 | 19 | 200 | 19 | 261 | 18 | 322 | 18 |
| 18 | 18 | 79 | 20 | 140 | 20 | 201 | 20 | 262 | 19 | 323 | 19 |
| 19 | 19 | 80 | 21 | 141 | 21 | 202 | 21 | 263 | 20 | 324 | 20 |
| 20 | 20 | 81 | 22 | 142 | 22 | 203 | 22 | 264 | 21 | 325 | 21 |
| 21 | 21 | 82 | 23 | 143 | 23 | 204 | 23 | 265 | 22 | 326 | 22 |
| 22 | 22 | 83 | 24 | 144 | 24 | 205 | 24 | 266 | 23 | 327 | 23 |
| 23 | 23 | 84 | 25 | 145 | 25 | 206 | 25 | 267 | 24 | 328 | 24 |
| 24 | 24 | 85 | 26 | 146 | 26 | 207 | 26 | 268 | 25 | 329 | 25 |
| 25 | 25 | 86 | 27 | 147 | 27 | 208 | 27 | 269 | 26 | 330 | 26 |
| 26 | 26 | 87 | 28 | 148 | 28 | 209 | 28 | 270 | 27 | 331 | 27 |
| 27 | 27 | 88 | 29 | 149 | 29 | 210 | 29 | 271 | 28 | 332 | 28 |
| 28 | 28 | 89 | 30 | 150 | 30 | 211 | 30 | 272 | 29 | 333 | 29 |
| 29 | 29 | 90 | 31 | 151 | 31 | 212 | 31 | 273 | 30 | 334 | 30 |
| 30 | 30 | 91 | 01APR | 152 | 01JUN | 213 | 01AUG | 274 | 01OCT | 335 | 01DEC |
| 31 | 31 | 92 | 02 | 153 | 02 | 214 | 02 | 275 | 02 | 336 | 02 |
| 32 | 01FEB | 93 | 03 | 154 | 03 | 215 | 03 | 276 | 03 | 337 | 03 |
| 33 | 02 | 94 | 04 | 155 | 04 | 216 | 04 | 277 | 04 | 338 | 04 |
| 34 | 03 | 95 | 05 | 156 | 05 | 217 | 05 | 278 | 05 | 339 | 05 |
| 35 | 04 | 96 | 06 | 157 | 06 | 218 | 06 | 279 | 06 | 340 | 06 |
| 36 | 05 | 97 | 07 | 158 | 07 | 219 | 07 | 280 | 07 | 341 | 07 |
| 37 | 06 | 98 | 08 | 159 | 08 | 220 | 08 | 281 | 08 | 342 | 08 |
| 38 | 07 | 99 | 09 | 160 | 09 | 221 | 09 | 282 | 09 | 343 | 09 |
| 39 | 08 | 100 | 10 | 161 | 10 | 222 | 10 | 283 | 10 | 344 | 10 |
| 40 | 09 | 101 | 11 | 162 | 11 | 223 | 11 | 284 | 11 | 345 | 11 |
| 41 | 10 | 102 | 12 | 163 | 12 | 224 | 12 | 285 | 12 | 346 | 12 |
| 42 | 11 | 103 | 13 | 164 | 13 | 225 | 13 | 286 | 13 | 347 | 13 |
| 43 | 12 | 104 | 14 | 165 | 14 | 226 | 14 | 287 | 14 | 348 | 14 |
| 44 | 13 | 104 | 15 | 166 | 15 | 227 | 15 | 288 | 15 | 349 | 15 |
| 45 | 14 | 106 | 16 | 167 | 16 | 228 | 16 | 289 | 16 | 350 | 16 |
| 46 | 15 | 107 | 17 | 168 | 17 | 229 | 17 | 290 | 17 | 351 | 17 |
| 47 | 16 | 108 | 18 | 169 | 18 | 230 | 18 | 291 | 18 | 352 | 18 |
| 48 | 17 | 109 | 19 | 170 | 19 | 231 | 19 | 292 | 19 | 353 | 19 |
| 49 | 18 | 110 | 20 | 171 | 20 | 232 | 20 | 293 | 20 | 354 | 20 |
| 50 | 19 | 111 | 21 | 172 | 21 | 233 | 21 | 294 | 21 | 355 | 21 |
| 51 | 20 | 112 | 22 | 173 | 22 | 234 | 22 | 295 | 22 | 356 | 22 |
| 52 | 21 | 113 | 23 | 174 | 23 | 235 | 23 | 296 | 23 | 357 | 23 |
| 53 | 22 | 114 | 24 | 175 | 24 | 236 | 24 | 297 | 24 | 358 | 24 |
| 54 | 23 | 115 | 25 | 176 | 25 | 237 | 25 | 298 | 25 | 359 | 25 |
| 55 | 24 | 116 | 26 | 177 | 26 | 238 | 26 | 299 | 26 | 360 | 26 |
| 56 | 25 | 117 | 27 | 178 | 27 | 239 | 27 | 300 | 27 | 361 | 27 |
| 57 | 26 | 118 | 28 | 179 | 28 | 240 | 28 | 301 | 28 | 362 | 28 |
| 58 | 27 | 119 | 29 | 180 | 29 | 241 | 29 | 302 | 29 | 363 | 29 |
| 59 | 28 | 120 | 30 | 181 | 30 | 242 | 30 | 303 | 30 | 364 | 30 |
| 60 | 01MAR | 121 | 01MAY | 182 | 01JUL | 243 | 31 | 304 | 31 | 365 | 31 |
| 61 | 02 | 122 | 02 | 183 | 02 | 244 | 01SEP | 305 | 01NOV | | |

REGULAR

| DOY | DATE | DOY | DATE | DOY | DATE | DOY | DATE | DOY | DATE | DOY | DATE |
|---|---|---|---|---|---|---|---|---|---|---|---|
| 1 | 01JAN | 62 | 02MAR | 123 | 02MAY | 184 | 02JUL | 245 | 01SEP | 306 | 01NOV |
| 2 | 02 | 63 | 03 | 124 | 03 | 185 | 03 | 246 | 02 | 307 | 02 |
| 3 | 03 | 64 | 04 | 125 | 04 | 186 | 04 | 247 | 03 | 308 | 03 |
| 4 | 04 | 65 | 05 | 126 | 05 | 187 | 05 | 248 | 04 | 309 | 04 |
| 5 | 05 | 66 | 06 | 127 | 06 | 188 | 06 | 249 | 05 | 310 | 05 |
| 6 | 06 | 67 | 07 | 128 | 07 | 189 | 07 | 250 | 06 | 311 | 06 |
| 7 | 07 | 68 | 08 | 129 | 08 | 190 | 08 | 251 | 07 | 312 | 07 |
| 8 | 08 | 69 | 09 | 130 | 09 | 191 | 09 | 252 | 08 | 313 | 08 |
| 9 | 09 | 70 | 10 | 131 | 10 | 192 | 10 | 253 | 09 | 314 | 09 |
| 10 | 10 | 71 | 11 | 132 | 11 | 193 | 11 | 254 | 10 | 315 | 10 |
| 11 | 11 | 72 | 12 | 133 | 12 | 194 | 12 | 255 | 11 | 316 | 11 |
| 12 | 12 | 73 | 13 | 134 | 13 | 195 | 13 | 256 | 12 | 317 | 12 |
| 13 | 13 | 74 | 14 | 135 | 14 | 196 | 14 | 257 | 13 | 318 | 13 |
| 14 | 14 | 75 | 15 | 136 | 15 | 197 | 15 | 258 | 14 | 319 | 14 |
| 15 | 15 | 76 | 16 | 137 | 16 | 198 | 16 | 259 | 15 | 320 | 15 |
| 16 | 16 | 77 | 17 | 138 | 17 | 199 | 17 | 260 | 16 | 321 | 16 |
| 17 | 17 | 78 | 18 | 139 | 18 | 200 | 18 | 261 | 17 | 322 | 17 |
| 18 | 18 | 79 | 19 | 140 | 19 | 201 | 19 | 262 | 18 | 323 | 18 |
| 19 | 19 | 80 | 20 | 141 | 20 | 202 | 20 | 263 | 19 | 324 | 19 |
| 20 | 20 | 81 | 21 | 142 | 21 | 203 | 21 | 264 | 20 | 325 | 20 |
| 21 | 21 | 82 | 22 | 143 | 22 | 204 | 22 | 265 | 21 | 326 | 21 |
| 22 | 22 | 83 | 23 | 144 | 23 | 205 | 23 | 266 | 22 | 327 | 22 |
| 23 | 23 | 84 | 24 | 145 | 24 | 206 | 24 | 267 | 23 | 328 | 23 |
| 24 | 24 | 85 | 25 | 146 | 25 | 207 | 25 | 268 | 24 | 329 | 24 |
| 25 | 25 | 86 | 26 | 147 | 26 | 208 | 26 | 269 | 25 | 330 | 25 |
| 26 | 26 | 87 | 27 | 148 | 27 | 209 | 27 | 270 | 26 | 331 | 26 |
| 27 | 27 | 88 | 28 | 149 | 28 | 210 | 28 | 271 | 27 | 332 | 27 |
| 28 | 28 | 89 | 29 | 150 | 29 | 211 | 29 | 272 | 28 | 333 | 28 |
| 29 | 29 | 90 | 30 | 151 | 30 | 212 | 30 | 273 | 29 | 334 | 29 |
| 30 | 30 | 91 | 31 | 152 | 31 | 213 | 31 | 274 | 30 | 335 | 30 |
| 31 | 31 | 92 | 01APR | 153 | 01JUN | 214 | 01AUG | 275 | 01OCT | 336 | 01DEC |
| 32 | 01FEB | 93 | 02 | 154 | 02 | 215 | 02 | 276 | 02 | 337 | 02 |
| 33 | 02 | 94 | 03 | 155 | 03 | 216 | 03 | 277 | 03 | 338 | 03 |
| 34 | 03 | 95 | 04 | 156 | 04 | 217 | 04 | 278 | 04 | 339 | 04 |
| 35 | 04 | 96 | 05 | 157 | 05 | 218 | 05 | 279 | 05 | 340 | 05 |
| 36 | 05 | 97 | 06 | 158 | 06 | 219 | 06 | 280 | 06 | 341 | 06 |
| 37 | 06 | 98 | 07 | 159 | 07 | 220 | 07 | 281 | 07 | 342 | 07 |
| 38 | 07 | 99 | 08 | 160 | 08 | 221 | 08 | 282 | 08 | 343 | 08 |
| 39 | 08 | 100 | 09 | 161 | 09 | 222 | 09 | 283 | 09 | 344 | 09 |
| 40 | 09 | 101 | 10 | 162 | 10 | 223 | 10 | 284 | 10 | 345 | 10 |
| 41 | 10 | 102 | 11 | 163 | 11 | 224 | 11 | 285 | 11 | 346 | 11 |
| 42 | 11 | 103 | 12 | 164 | 12 | 225 | 12 | 286 | 12 | 347 | 12 |
| 43 | 12 | 104 | 13 | 165 | 13 | 226 | 13 | 287 | 13 | 348 | 13 |
| 44 | 13 | 104 | 14 | 166 | 14 | 227 | 14 | 288 | 14 | 349 | 14 |
| 45 | 14 | 106 | 15 | 167 | 15 | 228 | 15 | 289 | 15 | 350 | 15 |
| 46 | 15 | 107 | 16 | 168 | 16 | 229 | 16 | 290 | 16 | 351 | 16 |
| 47 | 16 | 108 | 17 | 169 | 17 | 230 | 17 | 291 | 17 | 352 | 17 |
| 48 | 17 | 109 | 18 | 170 | 18 | 231 | 18 | 292 | 18 | 353 | 18 |
| 49 | 18 | 110 | 19 | 171 | 19 | 232 | 19 | 293 | 19 | 354 | 19 |
| 50 | 19 | 111 | 20 | 172 | 20 | 233 | 20 | 294 | 20 | 355 | 20 |
| 51 | 20 | 112 | 21 | 173 | 21 | 234 | 21 | 295 | 21 | 356 | 21 |
| 52 | 21 | 113 | 22 | 174 | 22 | 235 | 22 | 296 | 22 | 357 | 22 |
| 53 | 22 | 114 | 23 | 175 | 23 | 236 | 23 | 297 | 23 | 358 | 23 |
| 54 | 23 | 115 | 24 | 176 | 24 | 237 | 24 | 298 | 24 | 359 | 24 |
| 55 | 24 | 116 | 25 | 177 | 25 | 238 | 25 | 299 | 25 | 360 | 25 |
| 56 | 25 | 117 | 26 | 178 | 26 | 239 | 26 | 300 | 26 | 361 | 26 |
| 57 | 26 | 118 | 27 | 179 | 27 | 240 | 27 | 301 | 27 | 362 | 27 |
| 58 | 27 | 119 | 28 | 180 | 28 | 241 | 28 | 302 | 28 | 363 | 28 |
| 59 | 28 | 120 | 29 | 181 | 29 | 242 | 29 | 303 | 29 | 364 | 29 |
| 60 | 29 | 121 | 30 | 182 | 30 | 243 | 30 | 304 | 30 | 365 | 30 |
| 61 | 01MAR | 122 | 01MAY | 183 | 01JUL | 244 | 31 | 305 | 31 | 366 | 31 LEAP |

| | LOW U | HI U | LOW V | HI V |
|---|---|---|---|---|
| SLETGN | 69 | 74 | 0 | 255 * |
| SCENTWR | 0 | 255 | 65 | 127 |
| SNWING | 0 | 255 | 128 | 255 |
| SP WING | 0 | 255 | 0 | 64 |

* NOW PART OF S DEFAULTS

SIM POSITIONS

| | TABLE | FOCUS |
|---|---|---|
| HRC-I | -50504 | -716 |
| HRC-S/LETG | -99616 | ~~-1048~~ -991 * |
| ACIS-S/HETG | 75624 | -468 |
| ACIS-I | | |
| HRC-S (NO GRATING) | -99616 | -1063 * OK |

* -991 IS SUPPOSING TO BE 100 μ FWD OF BEST ON-AXIS FOCUS W/ LETG OUT.

-991 N - 1427.4 μ
-1063 N - 1528.2 μ
Δ = 100.8

} FROM SIM FOCUS TABLE IN MOTORS SECTION

HRGI FOCUS

9/3

| | Stm Steps | Stm mm | "focus" |
|---|---|---|---|
| USED FOR SOME HRG-I OBS | -700 | -1.020 | -1.275 |
| SCANE NORMALIZATION | +172 (launch lock) | 0.255 | 0 |
| USED FOR SOME HRG-I OBS | -900 | -1.300 | -1.555 |
| AVERAGE OF 2 ESTIMATES BELOW | -816 | -1.210 | -1.460 |
| FOCUS PLATE ESTIMATE | -793 | -1.150 | -1.400 |
| QUAD FOCUS ESTIMATE | -879 | -1.270 | -1.520 |

ABSOLUTE MOTOR STEPS

WRT 0 STEPS ≈ 0 MM

WRT LAUNCH POSITION OF +172 STEPS ≈ 0 MM

4 09 99
"BEST" FOCUS NOW DETERMINED TO BE "-716" ABSOLUTE MOTOR STEPS

| | | | | | |
|---|---|---|---|---|---|
| A | ALFA | (**AL** FAH) | N | NOVEMBER | (NO **VEM** BER) |
| B | BRAVO | (**BRAH** VOH) | O | OSCAR | (**OSS** CAH) |
| C | CHARLIE | (**CHAR** LEE) | P | PAPA | (PAH **PAH**) |
| D | DELTA | (**DELL** TAH) | Q | QUEBEC | (KEH **BECK**) |
| E | ECHO | (**ECK** OH) | R | ROMEO | (**ROW** ME OH) |
| F | FOXTROT | (**FOKS** TROT) | S | SIERRA | (SEE **AIR** RAH) |
| G | GOLF | (GOLF) | T | TANGO | (**TANG** GO) |
| H | HOTEL | (HOH **TELL**) | U | UNIFORM | (**YOU** NEE FORM) |
| I | INDIA | (**IN** DEE AH) | V | VICTOR | (**VIK** TAH) |
| J | JULIETT | (**JEW** LEE ETT) | W | WHISKEY | (**WISS** KEY) |
| K | KILO | (**KEY** LOH) | X | X-RAY | (**ECKS** RAY) |
| L | LIMA | (**LEE** MAH) | Y | YANKEE | (**YANG** KEY) |
| M | MIKE | (MIKE) | Z | ZULU | (**ZOO** LOO) |

International Civil Aviation Organization
Phonetic Alphabet

| | Old Military | New International | | Old Military | New International |
|---|---|---|---|---|---|
| A | Able | Alfa | N | Nan | November |
| B | Baker | Bravo | O | Oboe | Oscar |
| C | Charlie | Charlie | P | Peter | Papa |
| D | Dog | Delta | Q | Queen | Quebec |
| E | Easy | Echo | R | Roger | Romeo |
| F | Fox | Foxtrot | S | Sugar | Sierra |
| G | George | Golf | T | Tare | Tango |
| H | How | Hotel | U | Uncle | Uniform |
| I | Item | India | V | Victor | Victor |
| J | Jig | Juliet | W | William | Whiskey |
| K | King | Kilo | X | X-ray | X-ray |
| L | Love | Lima | Y | Yoke | Yankee |
| M | Mike | Mike | Z | Zebra | Zulu |

Note: In some countries, Italy is prefered over India.

# AXAF/IUS/Orbiter CMD & TLM Interfaces

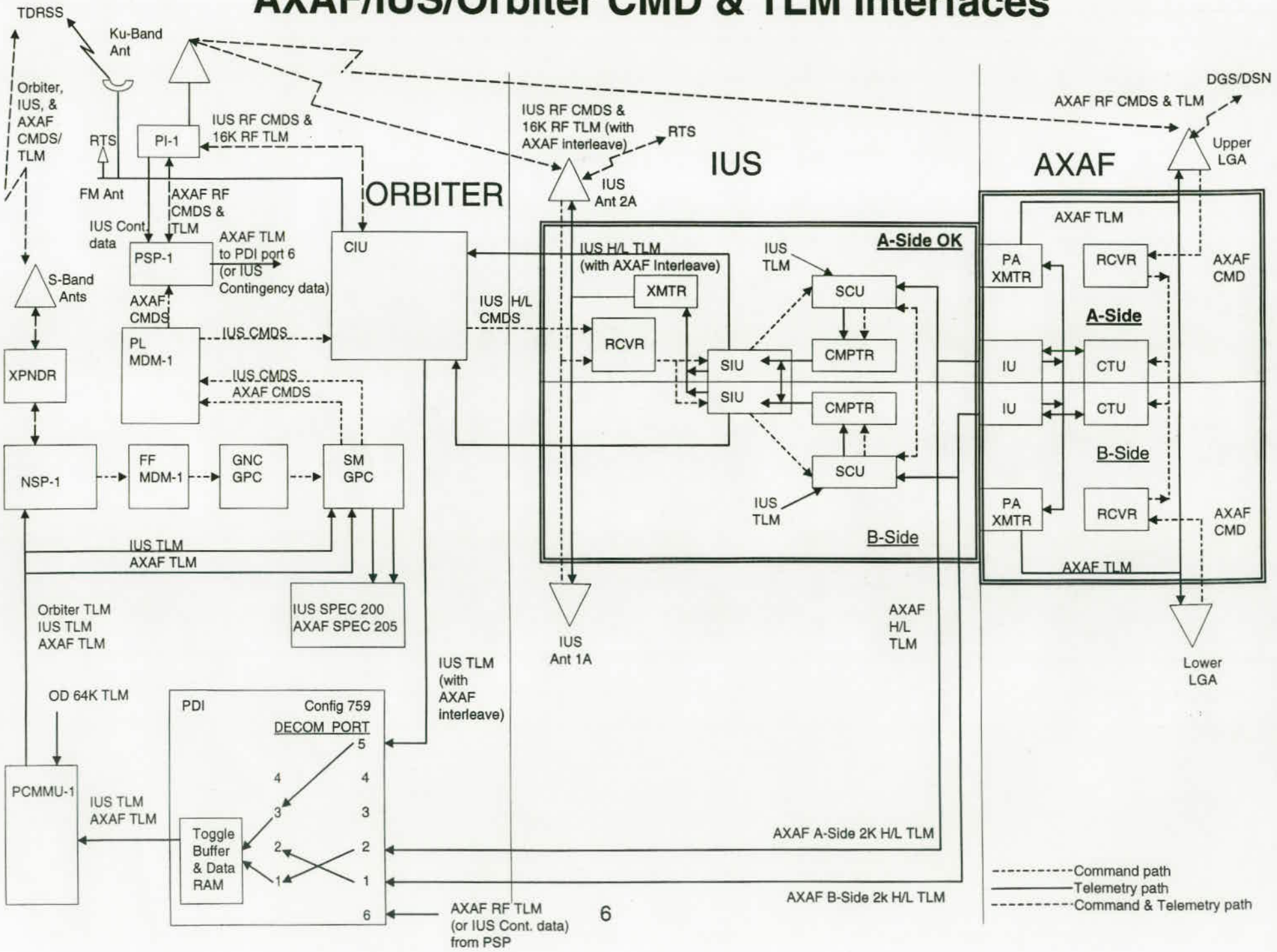

SUPV. HTR BUS

| | CMD ON | MSID | | |
|---|---|---|---|---|
| PRI | 3HCKTSON | ESIMHCTS | ON | ✓ |
| SEC | 3HCT10ON | ESIMCT10 | ON | ✓ |

CAKE PAN HTR ? (FOWS ASY 6 PRIME)

| CMD ON | MSID | |
|---|---|---|
| 3FA6PAON | 3AZF6HTA | ✓ |

OCR DISPLAY

E_PD_SI_SW

CAKE PAN NIC TOTOR 3FAMYZAT ✓

# Focal Plane Layout

2/9/98
layout.bmp

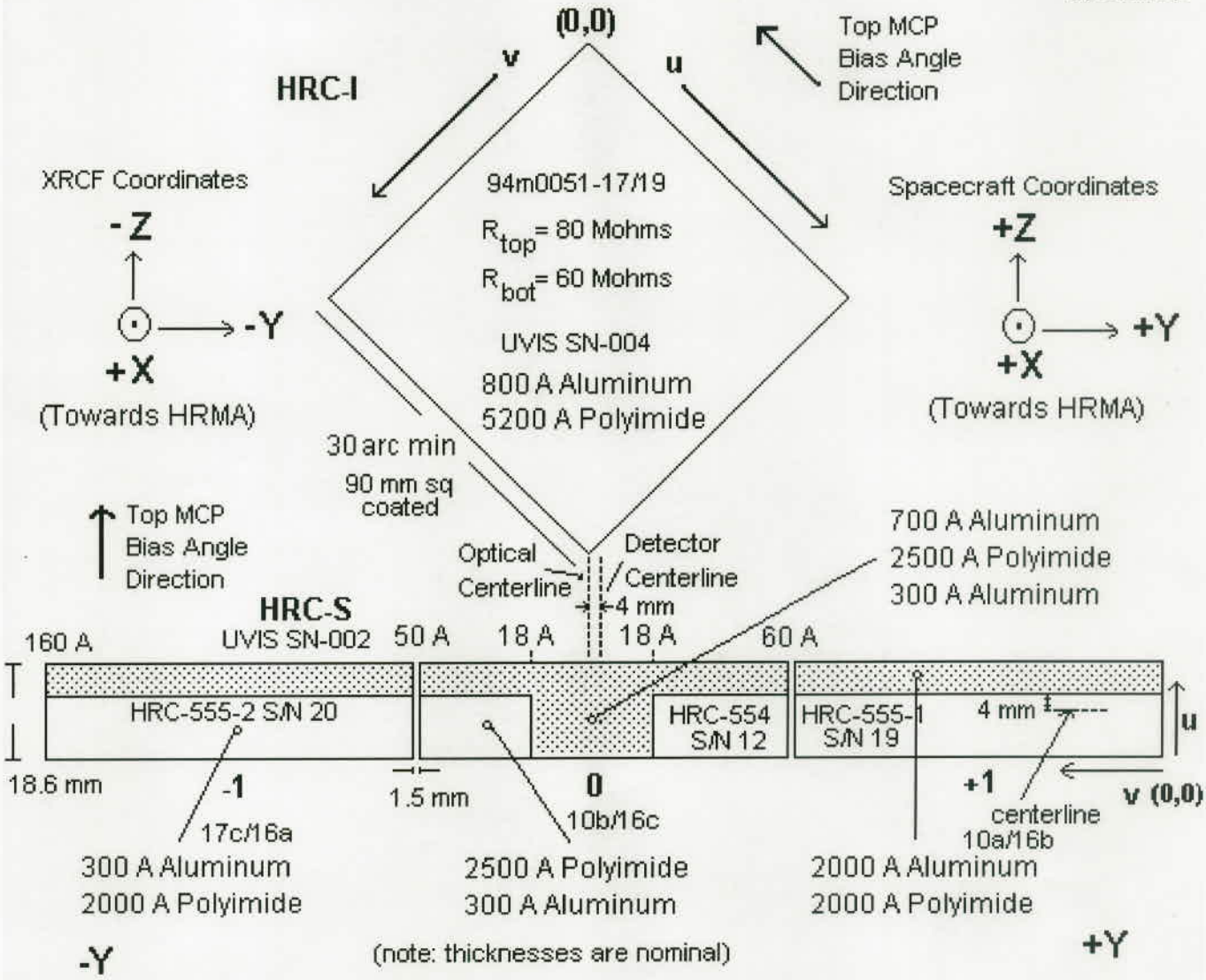

29 AUG 99

# DITHER

- DITHER AMPLITUDE IS THE HALF-AMPLITUDE.
- THE MAXIMUM AMP (SPEC'D BY PCAD) IS 20 SEC
- THE MAXIMUM FREQ & AMP PRODUCT (SPEC'D BY PCAD) IS $0.228 \frac{\text{SEC}}{\text{SEC}}$

  FOR THE MAX AMP OF 20 SEC (WHICH WILL BE USED BY HRC FOR MOST OBSERVATIONS TO TAKE INTO ACCOUNT THE SCALE ON WHICH THE HRC QE WAS MEASURED), THIS GIVES A MAX FREQ OF

$$\frac{.228 \text{ SEC/SEC}}{20 \text{ SEC}} = .0114 \text{ RAD/SEC}$$

$$.0114 \frac{\text{RAD}}{\text{SEC}} \times \frac{1}{2\pi} \frac{\text{CYCLES}}{\text{RAD}} = .00181 \frac{\text{CYCLES}}{\text{SEC}} = .00181 \text{ Hz}$$

- THE DITHER FREQ, SPECIFIED AS DEG/SEC, IS NOT DEG IN THE FOCAL PLANE, BUT DEGREES OF MOTION OF THE S/C AROUND THE LATERAL DITHER AXIS. THE FOLLOWING RELATIONSHIP HOLDS

$$F \left(\frac{\text{DEG}}{\text{SEC}}\right) \times \frac{1}{360} \frac{\text{CYCLES}}{\text{DEG}} = \frac{F}{360} \frac{\text{CYCLES}}{\text{SEC}} = \frac{F}{360} \text{ Hz}$$

- THUS $.00181 \text{ Hz} \approx .6516 \text{ DEG/SEC}$

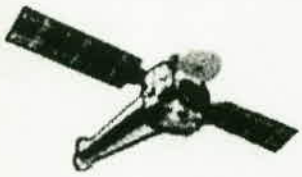

# Chandra PCAD TST Flight Note

***In a Dither?***

| | |
|---|---|
| FLIGHT NOTE NO. | #300 |
| SUBJECT | CHANDRA Dither Capability |
| DATE | 22 August 1999 |
| AUTHOR | N. Kascak |

## *Summary*


The CHANDRA observatory requirement for dither is to provide a commandable dither magnitude of up to 20 arcsec amplitude at a rate of up to 0.1 arcsec/sec. Dither capability has been demonstrated in the NPM Checkout procedure as well as during the start of nominal operations. Pointing stability requirements are met while dithering, with the exception of expected dither start and stop transients.

| Dither AXIS | Requirement | | Demonstrated On-Orbit | |
|---|---|---|---|---|
| | Amplitude | Rate | Amplitude | Rate |
| Pitch | 20 arcsec | .1 arcsec/sec | 20 arcsec | .20 arcsec/sec |
| Yaw | 20 arcsec | .1 arcsec/sec | 20 arcsec | .11 arcsec/sec |


## *Background*

The capability exists to command a small attitude dither about the target attitude. This dither is commanded in a lissajous pattern and may be commanded with maximum dither amplitude of 20 arcsec and maximum dither rate of 0.2 arcsec/sec. Dither is accomplished by adding small attitude error and rate error components to the control law errors, forcing the attitude and rate to follow a calculated dither pattern. The target quaternion and commanded quaternion do not contain the dither commands, so the dither will show up as a difference between the on-board estimated quaternion and the target quaternion. This difference between the estimated and target quaternion is plotted as "Attitude relative to Target" and clearly shows the achieved dither pattern.

Dither will typically be commanded for an entire observation and will begin as soon as the Kalman filter processing is started. Dither will typically continue up to the end of the observation and will stop when Normal Maneuver Mode is commanded to begin the maneuver to the next observation target. For HRC observation, HRC high voltage is not ramped up until after the ACA Sequence reaches KALMAN and dither has begun. Because the start of dither coincides with the initial pull in of the Kalman filter and the stop of dither coincides with the transition to Normal Maneuver Mode, the initial and final dither transients are typically not clearly observable on their own. However, during the Normal Point Mode Demonstration Procedure, dither was started and stopped during

stable Normal Pointing, allowing the transients due to the start and stop to be clearly observable. Plots 1, 2 and 2A show the S/C Rates, the Attitude with Respect to the Target Quaternion, the RMS-10 second Pointing Stability, and the Control Law Attitude Errors.

Plot 1 shows the s/c rates and difference between the estimated and target quaternions (shown as attitude relative to target quaternion) for the dither period during the NPM Demonstration procedure. The dither enable flag is shown at the bottom of the plot to clarify when dither was enabled and disabled by ground command. This checkout started dither and stopped dither within a stable NPM dwell period, which is somewhat artificial. Typically, dither will start as soon as guide stars are acquired and the Kalman filter begins running and will be discontinued at the transition to NMM at the end of an observation.

Plot 2 shows the RMS, 10 second pointing stability for the same time period as Plot 1. The entire dither period meets the 0.12 arcsec pointing stability requirements except for about 30 seconds at the start of the dither period and at the end of the dither period.

Plot 2A shows the attitude error seen by the control law during the dither period. Note that the attitude error rises to almost 20 arcsec when dither is discontinued due to the way the dither commands are incorporated into the control law errors. Typically, the discontinuation of dither will coincide with a mode transition to Normal Maneuver Mode, so the change in attitude error will be insignificant. However, in the event that dither is discontinued during NPM dwell, the slow pull in of the control law will prevent tracked stars from being lost.

Plot 3 shows the attitude relative to the target quaternion for a typical end-of-maneuver, auto-transition to NPM, and dither start up. For the typical case, as shown in Plot 3, the small transients due to dither start will be swamped by the initial Kalman Filter attitude update transient. Dither end transients (not shown) will also be insignificant when combined with a transition to Normal Maneuver Mode (where the NPM RMS pointing stability requirements do not apply).

Plot 4 shows the spacecraft rates for the dither period with each body axis plotted separately for clarity.

Ref: 6925091@1999225.000000
A-DITHER-SM.dec
VCDU-1999225.000000-69AB23.ztlm

PLOT1

# AXAF Spacecraft Data

PCAD

TRW/FOT
Aug 20 (Day 99232)
23:05:09 Z

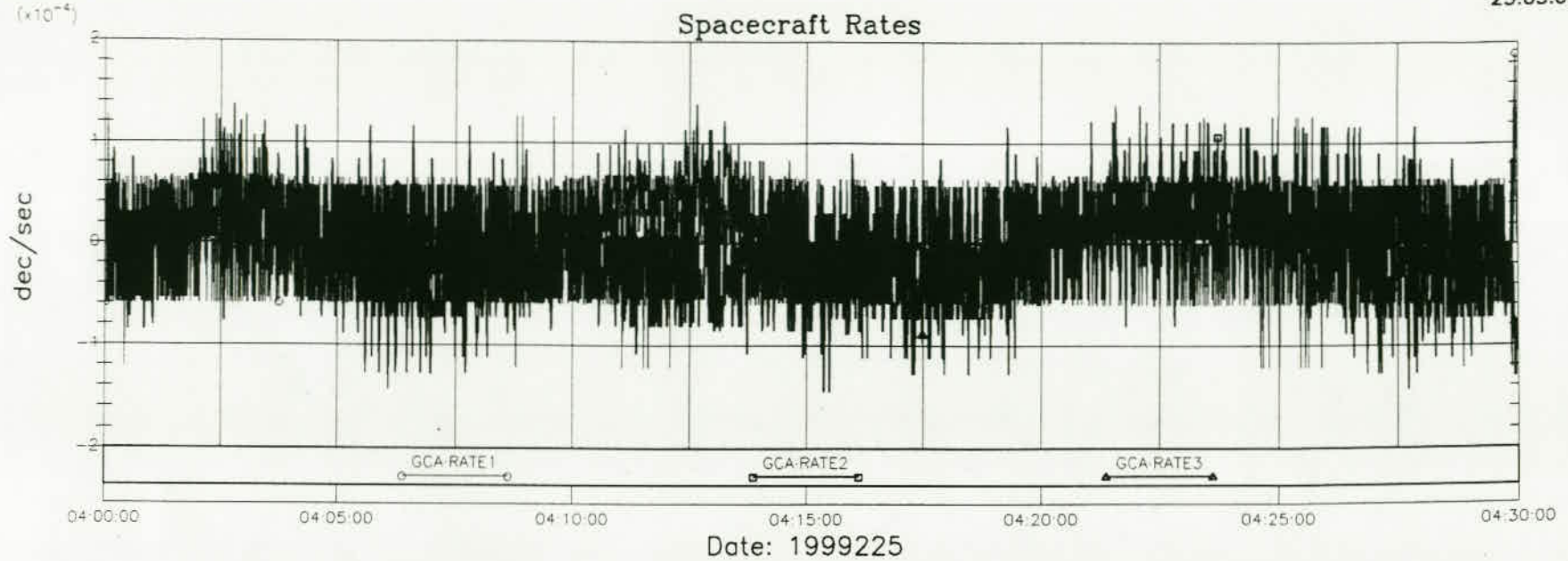


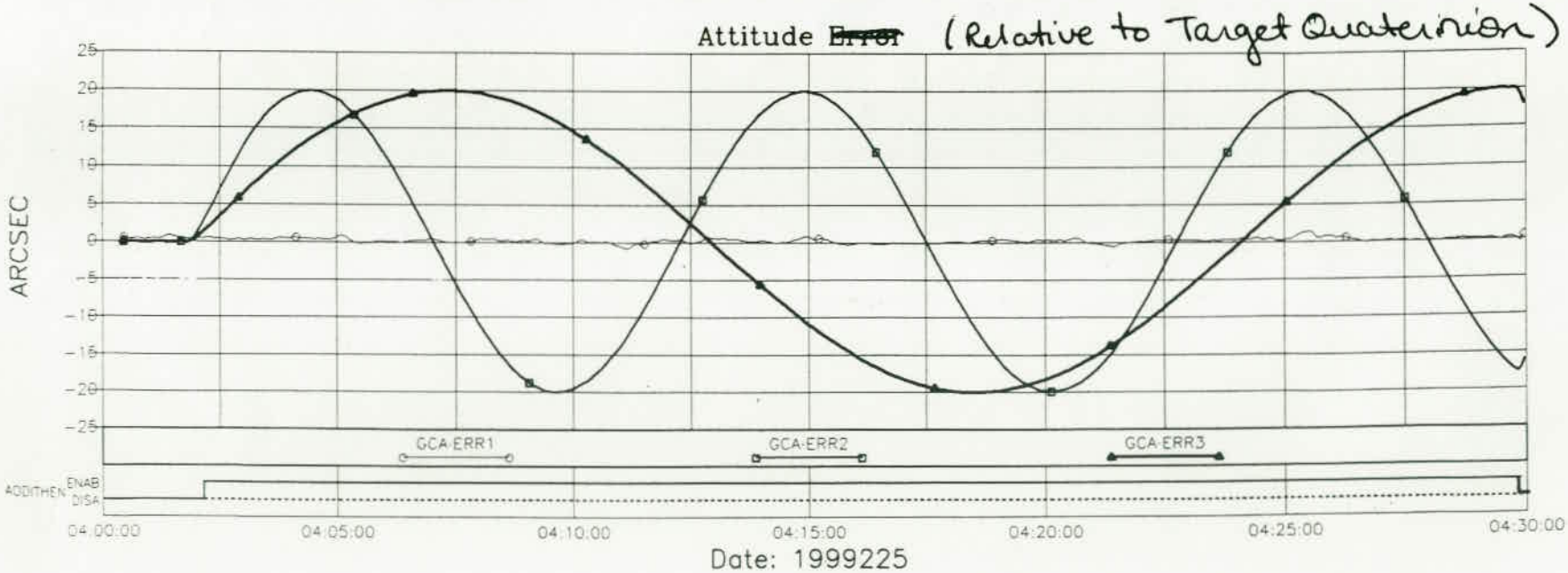

Ref: 69250910 1999225.000000
FT-ATTERR-STAB.dec
VCDU-1999225.000000-69AB23.ztlm

PLOT 2

# AXAF Spacecraft Data

PCAD

TRW/FOT
Aug 22 (Day 99234)
19:16:44 Z

## PITCH POINTING STABILITY (RMS, 10 SECOND PERIOD)

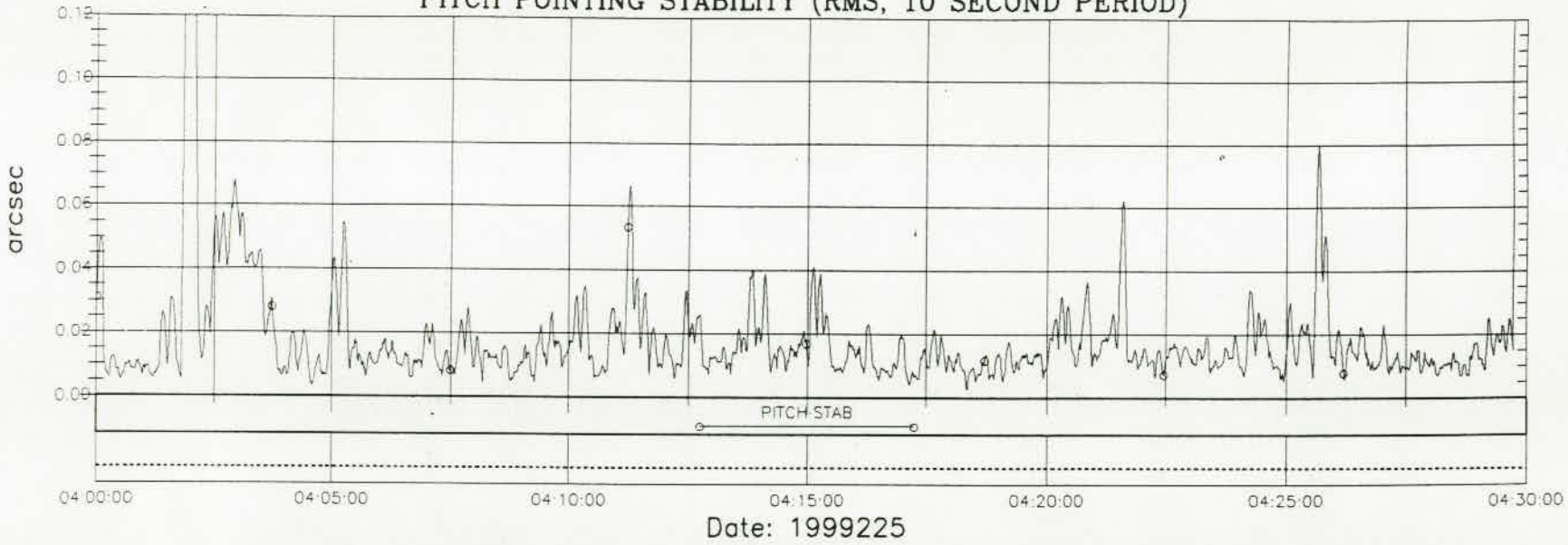


## YAW POINTING STABILITY (RMS, 10 SECOND PERIOD)

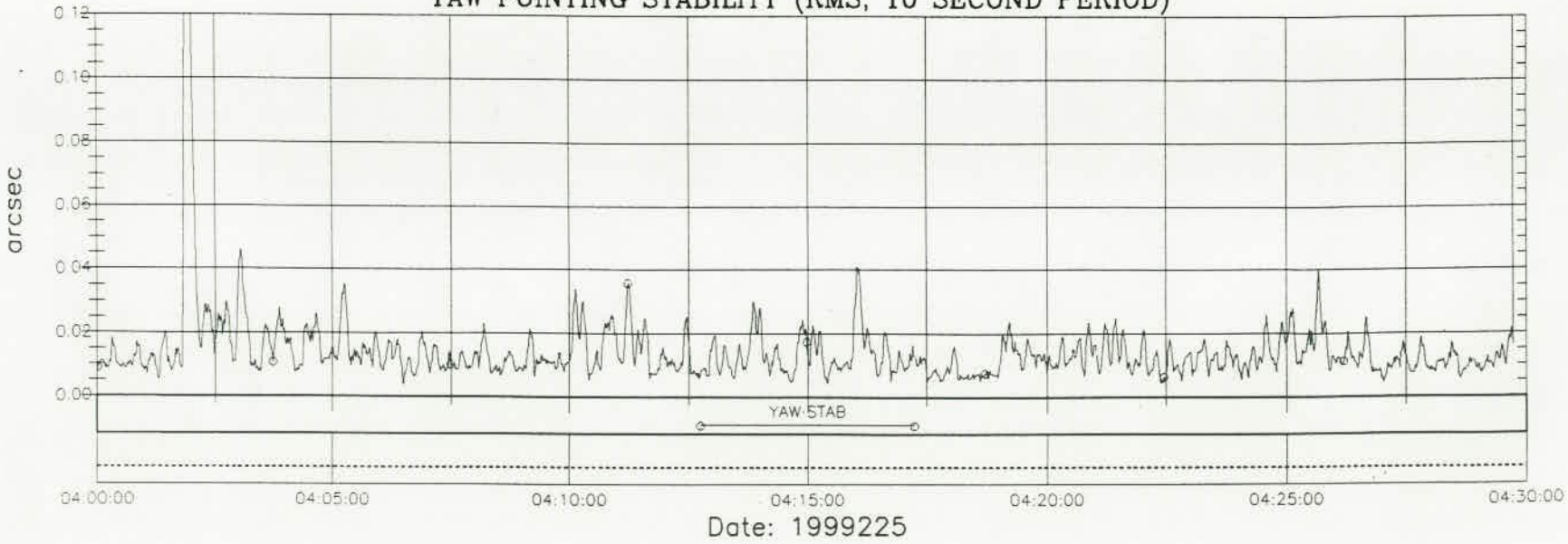


Page 4 of 7

Ref: 6925091@1999225.000000
AOATTER-3PLOT-ARC.dec
VCDU-1999225.000000-69AB23.ztlm

PLOT 2A

# AXAF Spacecraft Data

PCAD

TRW/FOT
Aug 20 (Day 99232)
23:15:19 Z

## Attitude Error

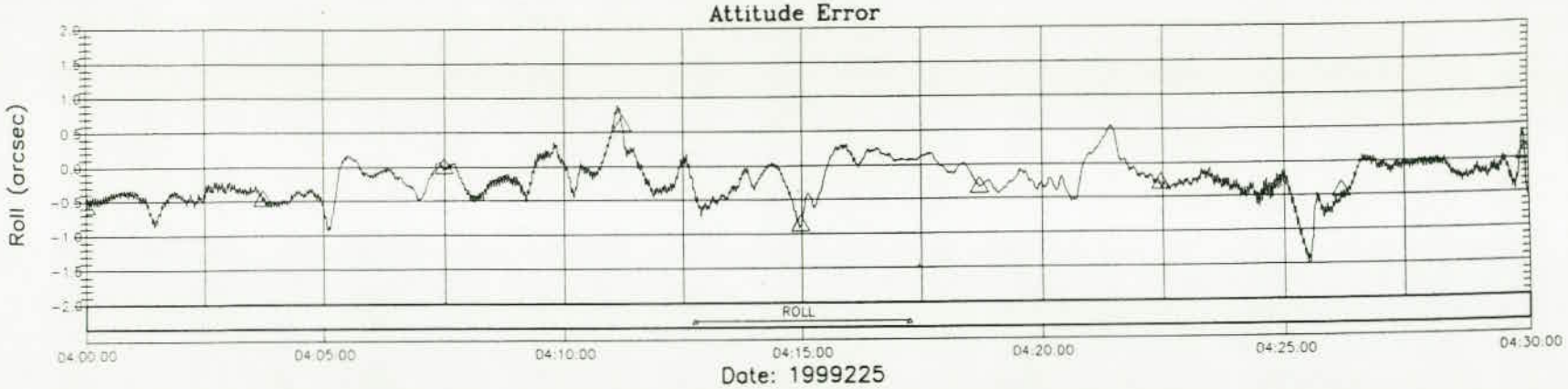


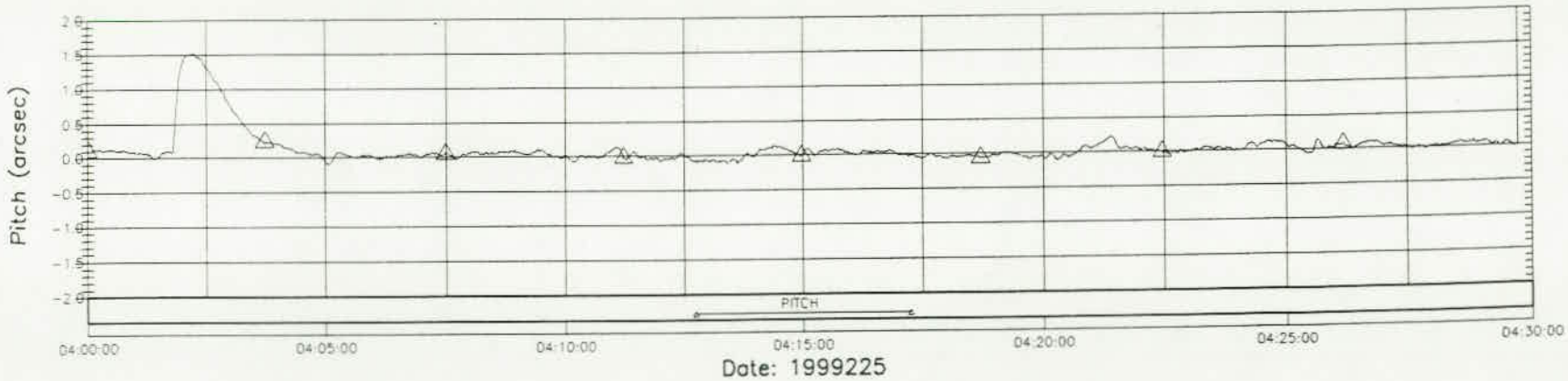


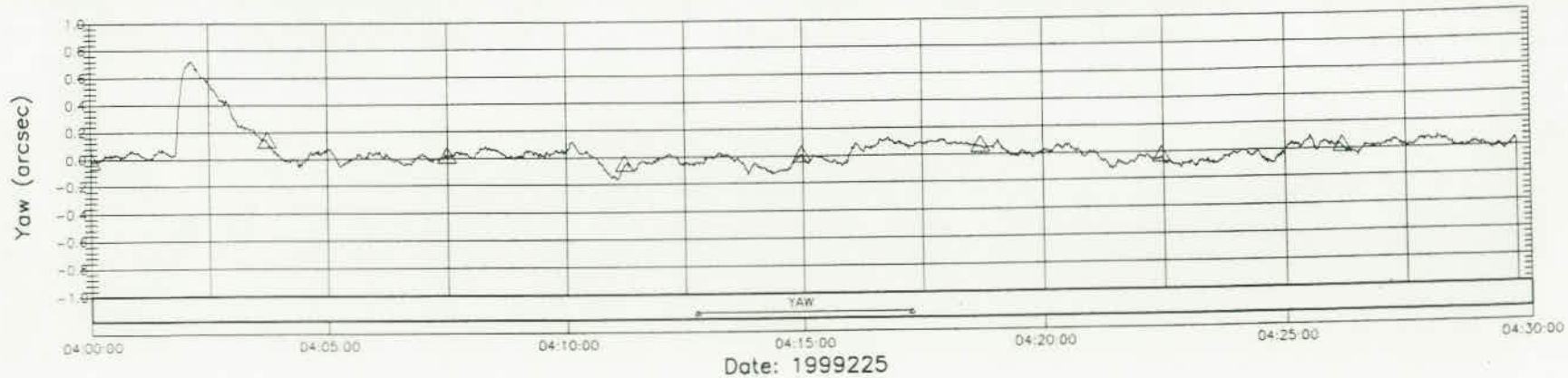


Pg 5 of 7

Ref: 986862@1999233.222642
AOATTERR·Q.dec
VCDU-1999233.222642·0F0EEE.ztlm

PLOT 3

# AXAF Spacecraft Data

PCAD

TRW/FOT
Aug 22 (Doy 99234)
18:49:33 Z

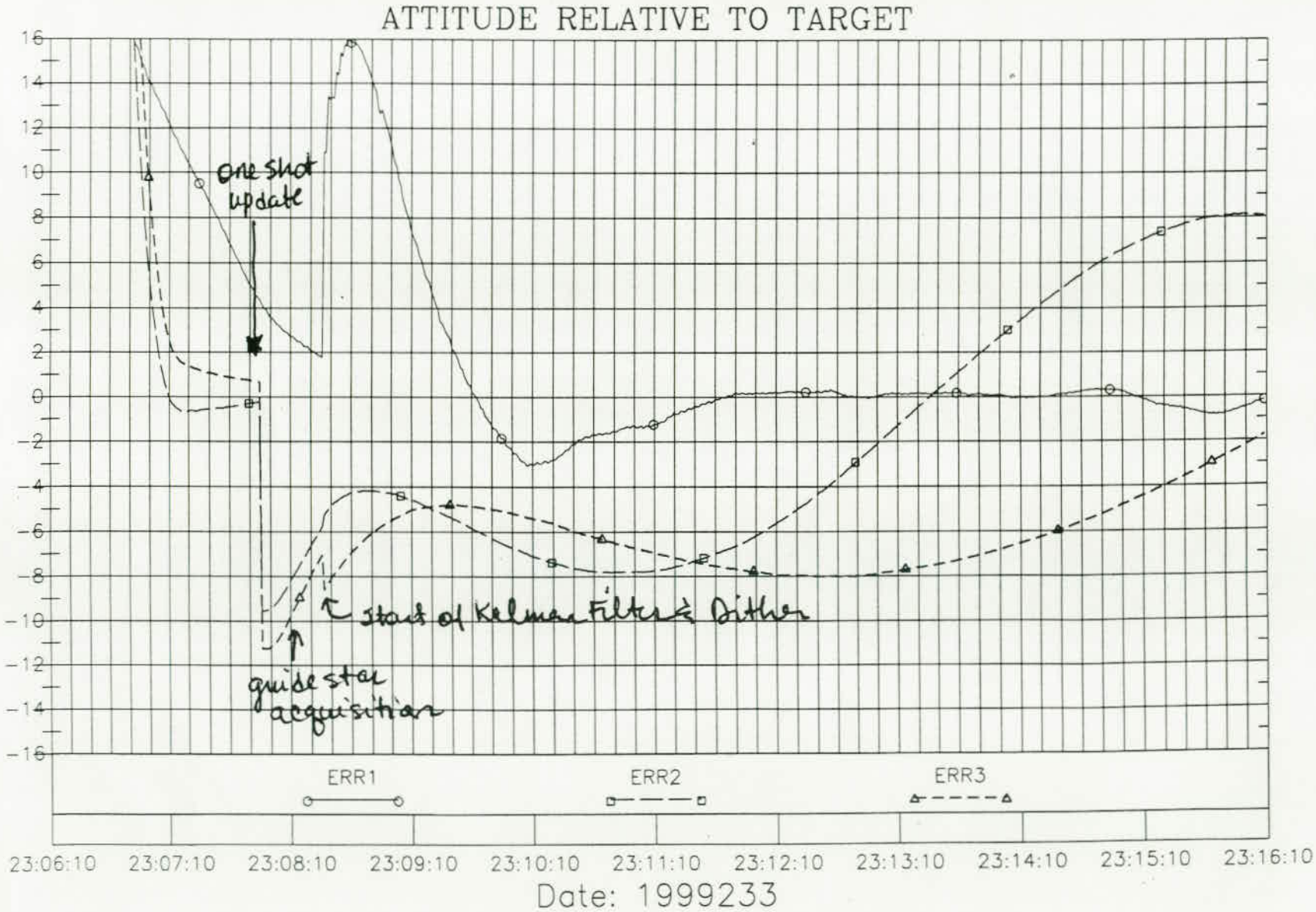


Page 6 of 7

Ref: 6925091●1999225.000000
A-DBR-AO-L.dec
VCDU-1999225.000000-69AB23.ztim

PLOT 4

# PCAD LOW RATE RANGE DIGITAL BODY RATES

AOGYRCT1–4 backdifferenced once/sec

TRW/FOT
Aug 22 (Day 99234)
22:22:52 Z

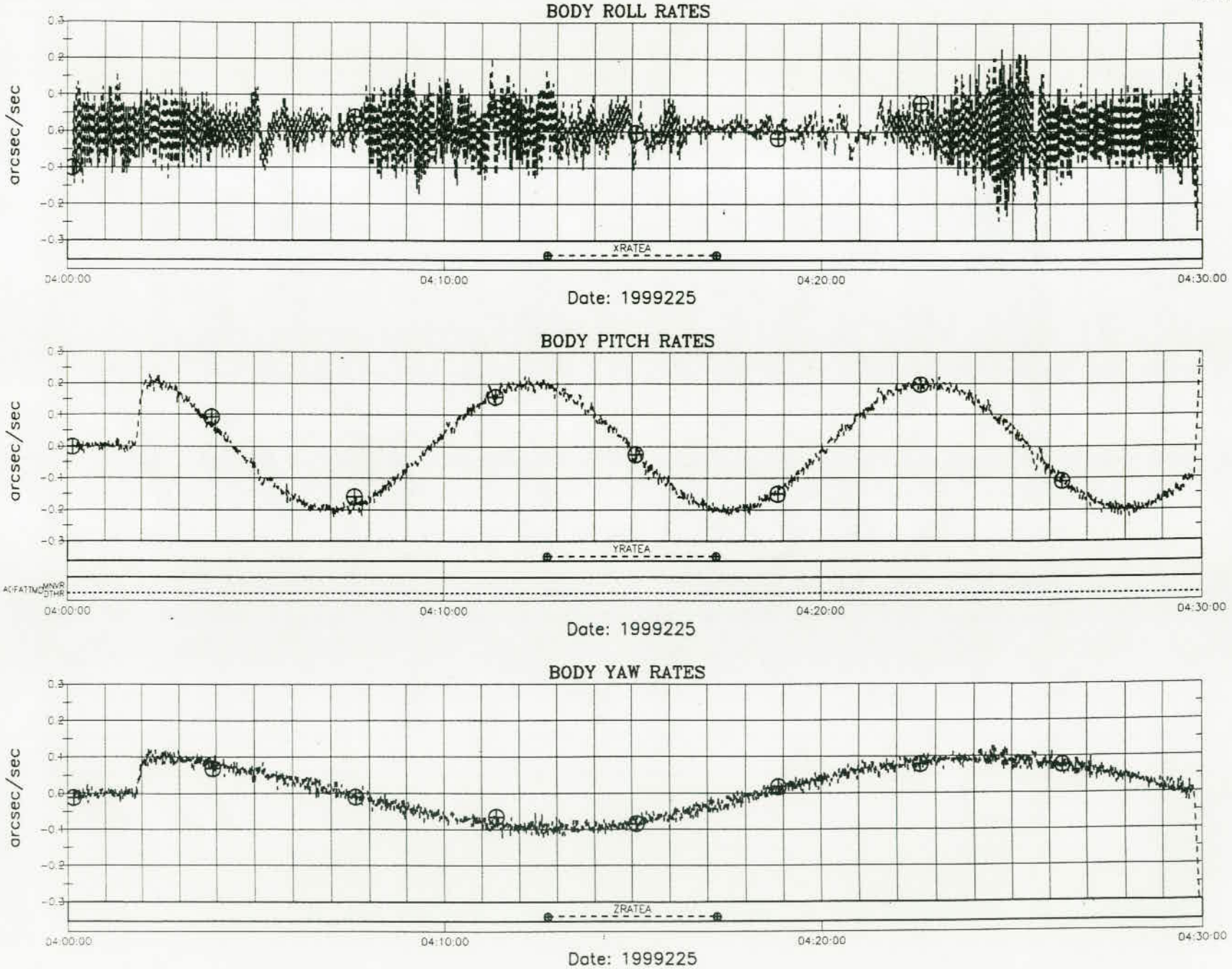


Page 1 of 4

Orbital Event Radiation and Altitude Zones

Table 1: Electron Radiation Threshold Zones

| Zone | Energy (MeV) | Flux Threshold (particles/cm2/sec) |
|---|---|---|
| ACIS E1RADZ0 | 0.5 | 25.0 |
| HRC E2RADZ0 | 1.0 | 5.0 |

Table 2: Proton Radiation Threshold Zones

| Zone | Energy (MeV) | Flux Threshold (particles/cm2/sec) |
|---|---|---|
| HRC P1RADZ0 | 1.0 | 5.0 |
| ACIS P2RADZ0 | 10.0 | 25.0 |

Table 3: Radial AltitudeThreshold Zones

| Zone | Lower Boundary (km) | Upper Boundary (km) |
|---|---|---|
| ZONE0 | 21377.0 | 21379.0 |
| ZONE1 | 27427.0 | 27427.0 |
| ZONE2 | 66377.0 | 66379.0 |
| ZONE3 | 106377.0 | 106379.0 |

TEST CASE

JUL 99

PRE LAUNCH