REVISIONS				
ZONE	LTR.	DESCRIPTION	DATE	APPROVED
	F	REVISED PER ECO #21239	7-7-97	

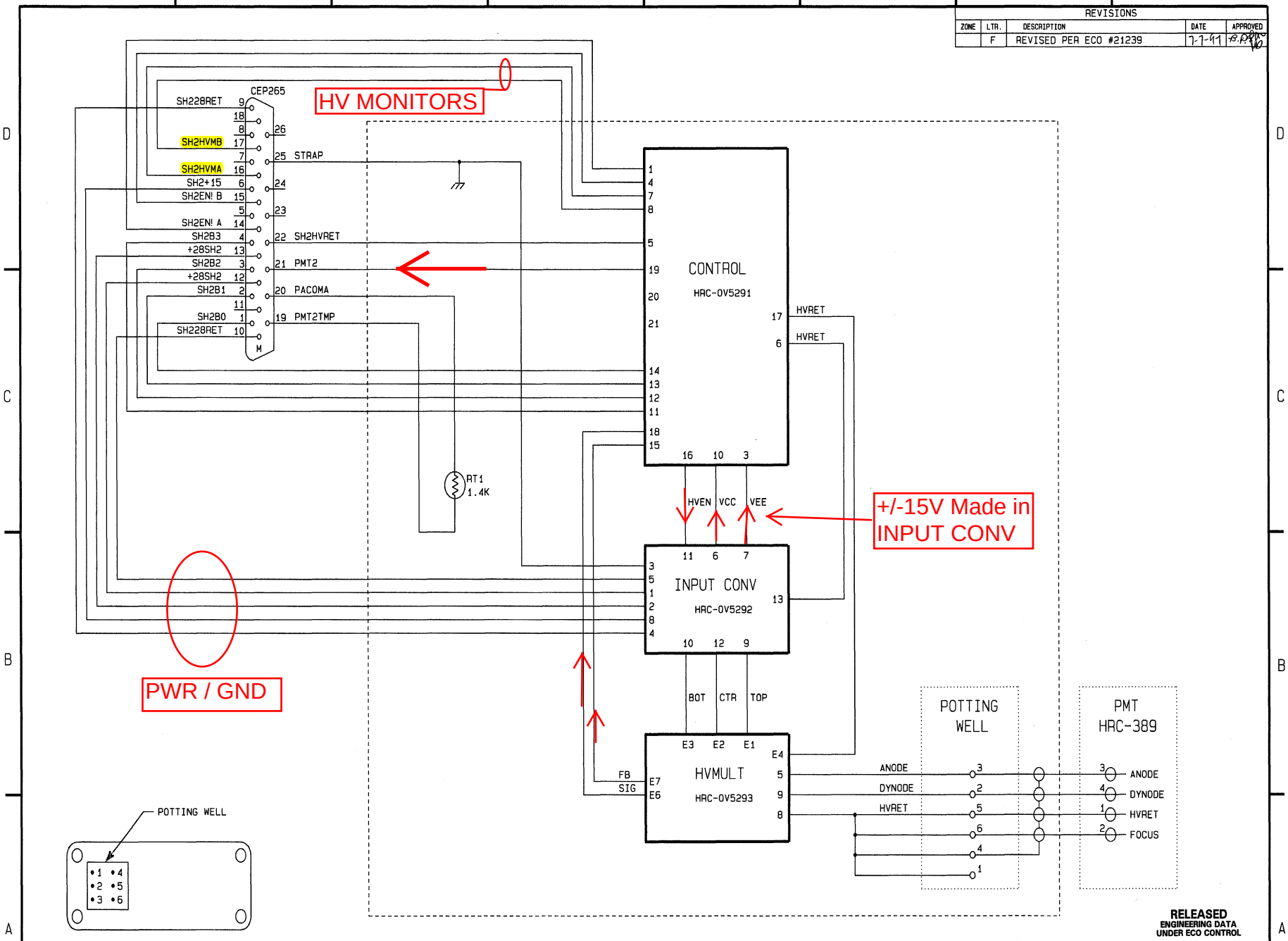

RELEASED
ENGINEERING DATA
UNDER ECO CONTROL

REMOVE BURRS AND BREAK SHARP EDGES UNLESS OTHERWISE SPECIFIED DIMENSIONS ARE IN INCHES TOLERANCES ON FRACTIONS ± DECIMALS .XX ± .XXX ± ANGLES ± MACH. FIN: FIN: MATL: NEXT ASSY:	DRN RBCook DATE 02/29/96 CHK B.MOONEY DATE 03/04/96 DSGN APPD DATE DSGN APPD DATE ENGR APPD D.WEAVER DATE 03/06/96 PROJ APPD D.W.for R.MOORE DATE 03/06/96 CM S.D.for K.DAIGLE 03/06/96	SMITHSONIAN ASTROPHYSICAL OBSERVATORY CENTRAL ENGINEERING CAMBRIDGE MA HRC PMT & POWER SUPPLY MODULE WIRING DIAGRAM C CODE IDENT NO. 50944 DWG NO. HRC-6106 REV F SCALE NONE SCHEMA V3.34 SHEET 1 OF 1

C-HRC-6106-01-OF.HPS: 2