# 3V3 REGULATOR

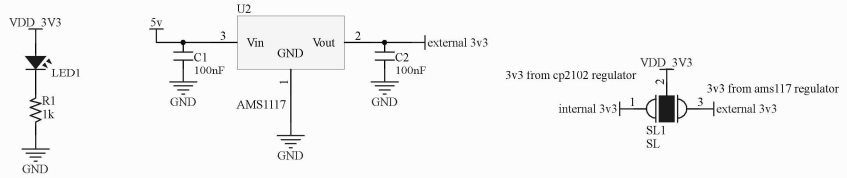


# CLOCK GENARATOR

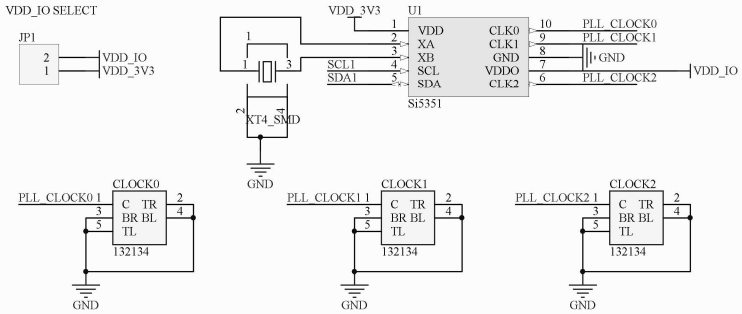


# USB TO TTL (CP2102)

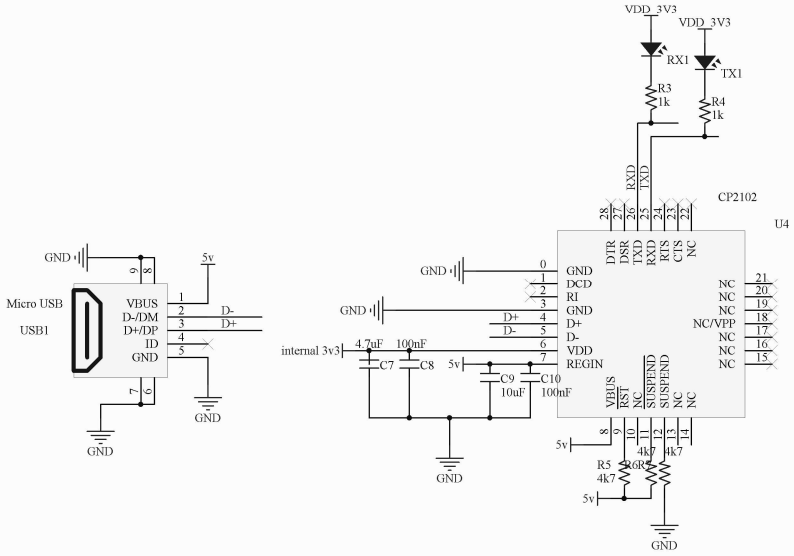


# MCU (ATMEGA328P)

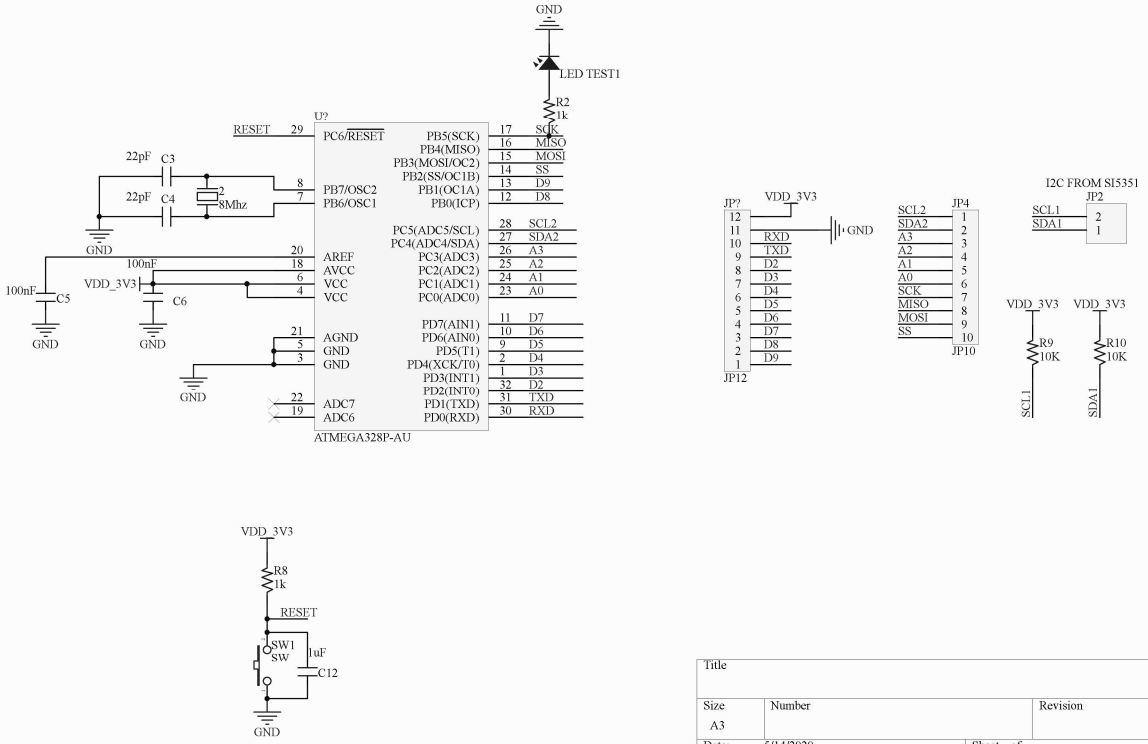


| Title | | |
|---|---|---|
| Size A3 | Number | Revision |
| Date: 5/14/2020 | | Sheet of |
| File: D:\document\..\Sheet1.SchDoc | | Drawn By: |