3V3 REGULATOR

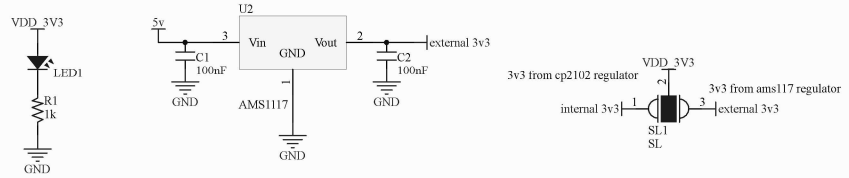

CLOCK GENARATOR

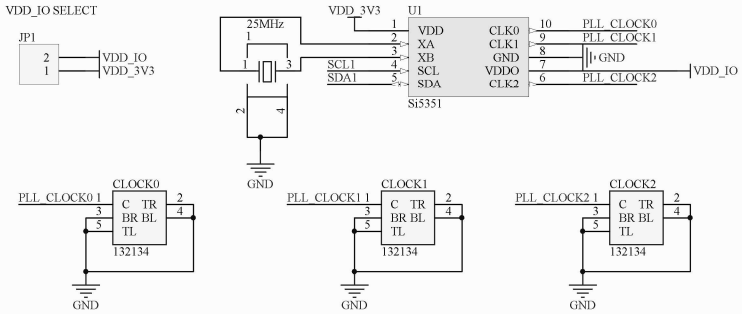

USB TO TTL (CP2102)

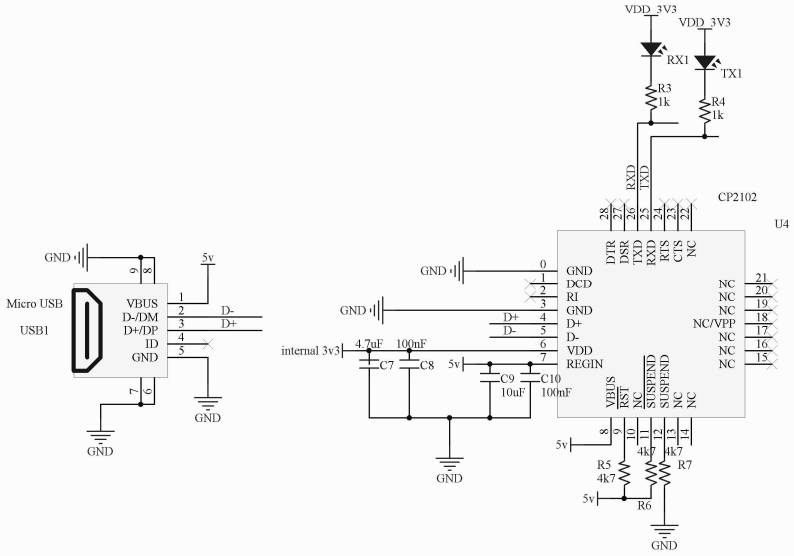

MCU (ATMEGA328P)

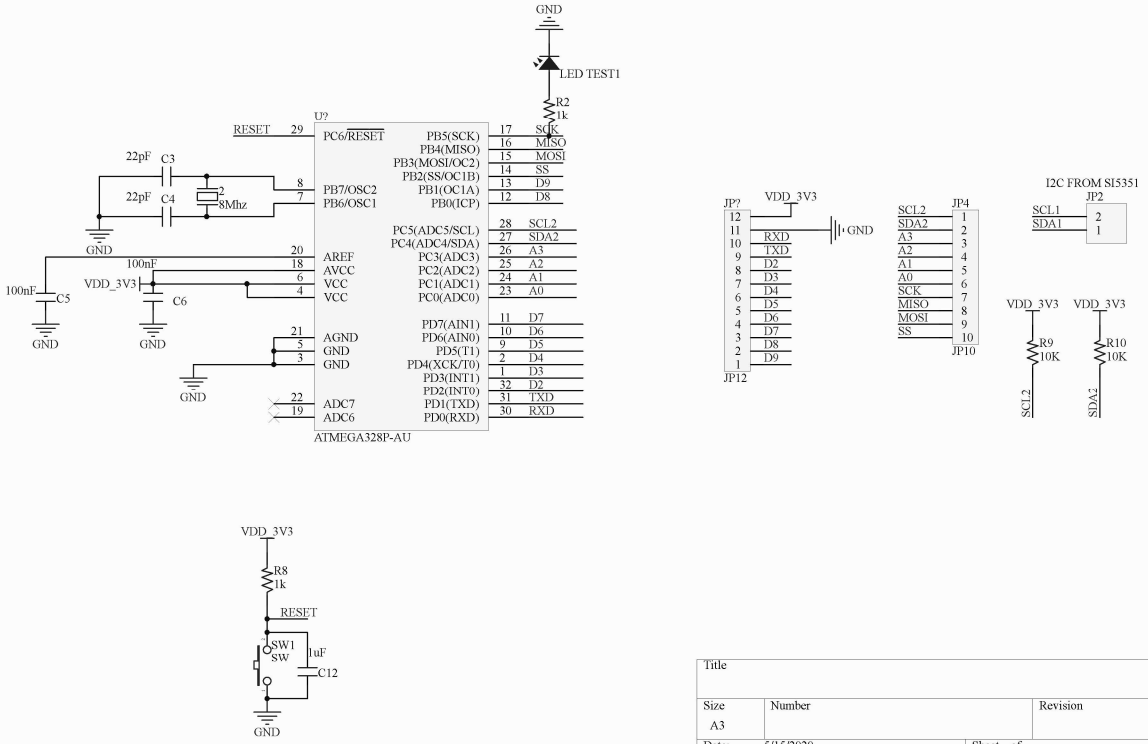

Title		
Size A3	Number	Revision
Date: 5/15/2020		Sheet of
File: D:\document\..\Sheet1.SchDoc		Drawn By: