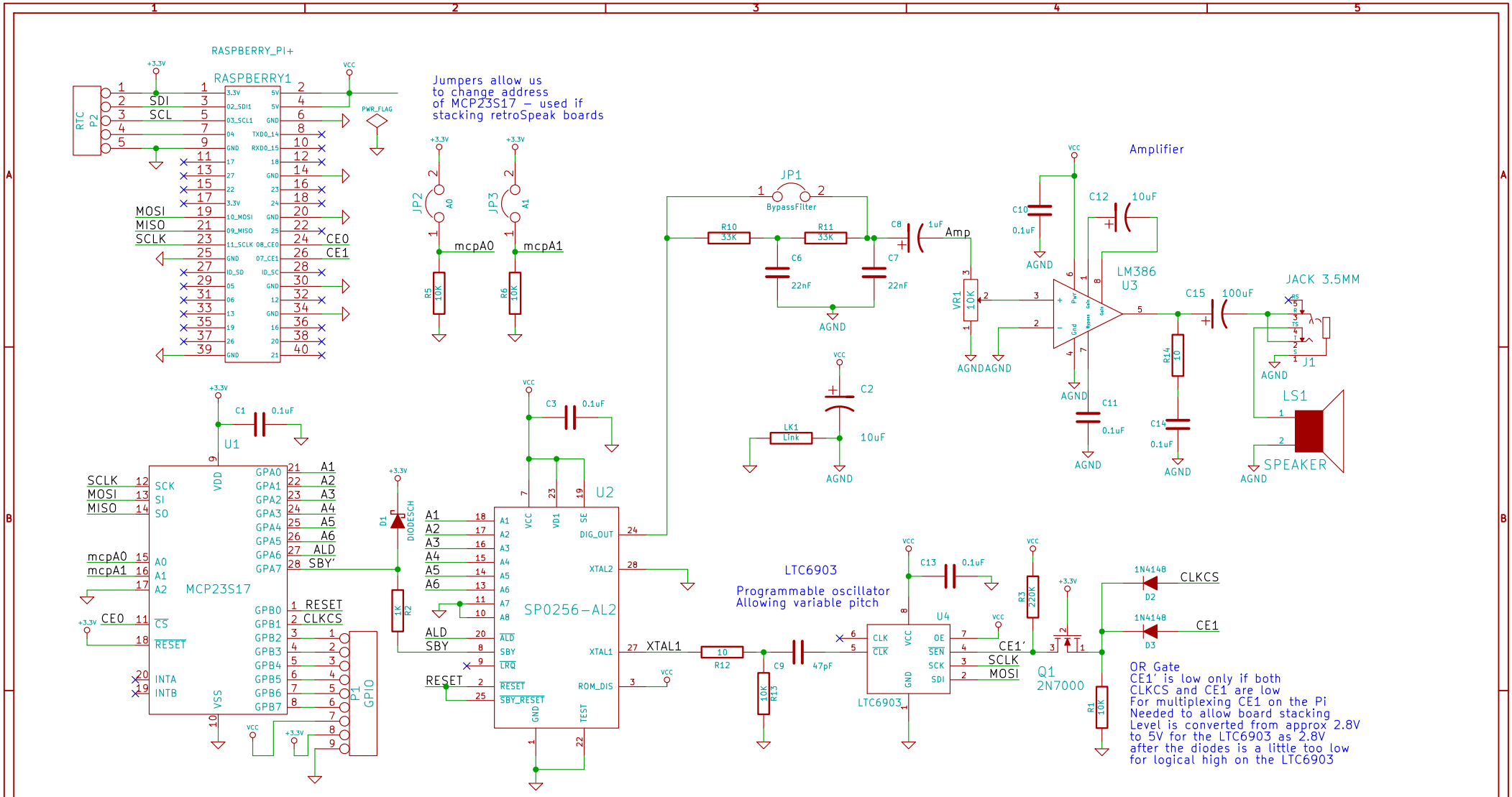


| | | |
|---|---|---|
| Jason Lane | | |
| File: retrospeak.sch | | |
| Sheet: / | | |
| Title: retroSpeak PCB | | |
| Size: A4 | Date: 18 feb 2015 | Rev: 1.3 |
| KiCad E.D.A. | | Id: 1/1 |