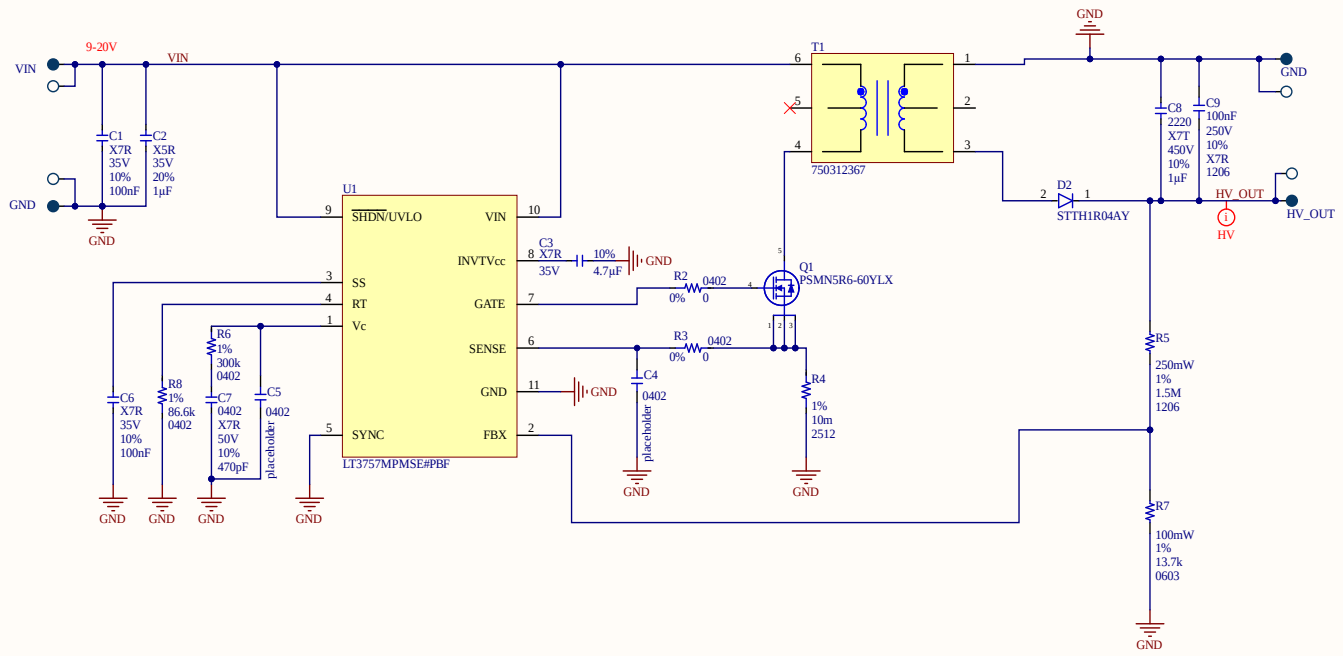

Designed By	Sheet Name	PCBA REV	Project	Sheet Number
GREGORY BAGHDIKIAN	HV_power_supply.SchDoc	A	HV Power Supply	1 of 1

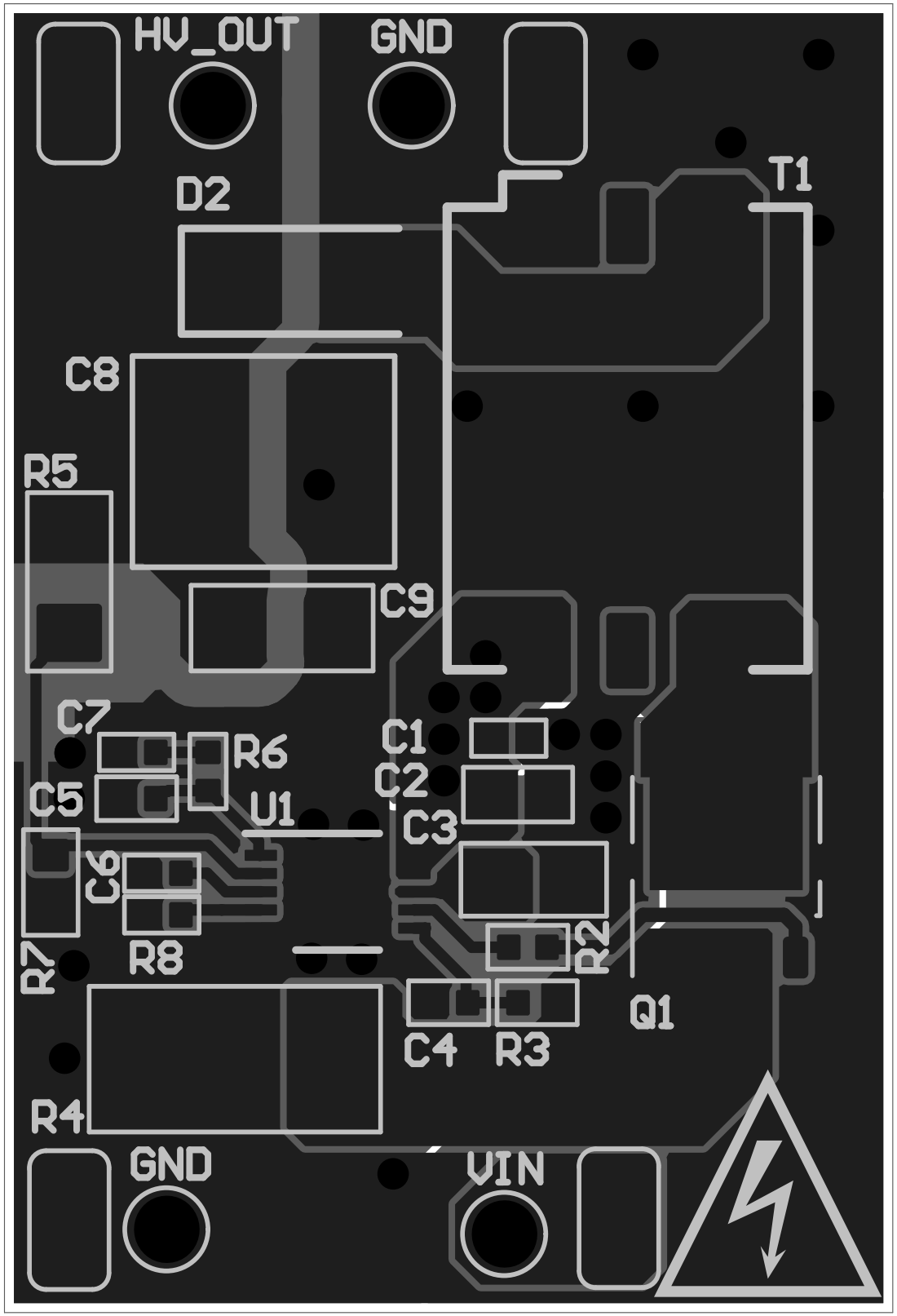
HV_OUT
GND
D2
T1
C8
R5
C9
C7
R6
C1
C2
C5
U1
C3
C6
R7
R8
R2
Q1
C4
R3
R4
GND
VIN