Whirligig

Model Instrcutions by Matt Norman
http://www.greatballpit.com

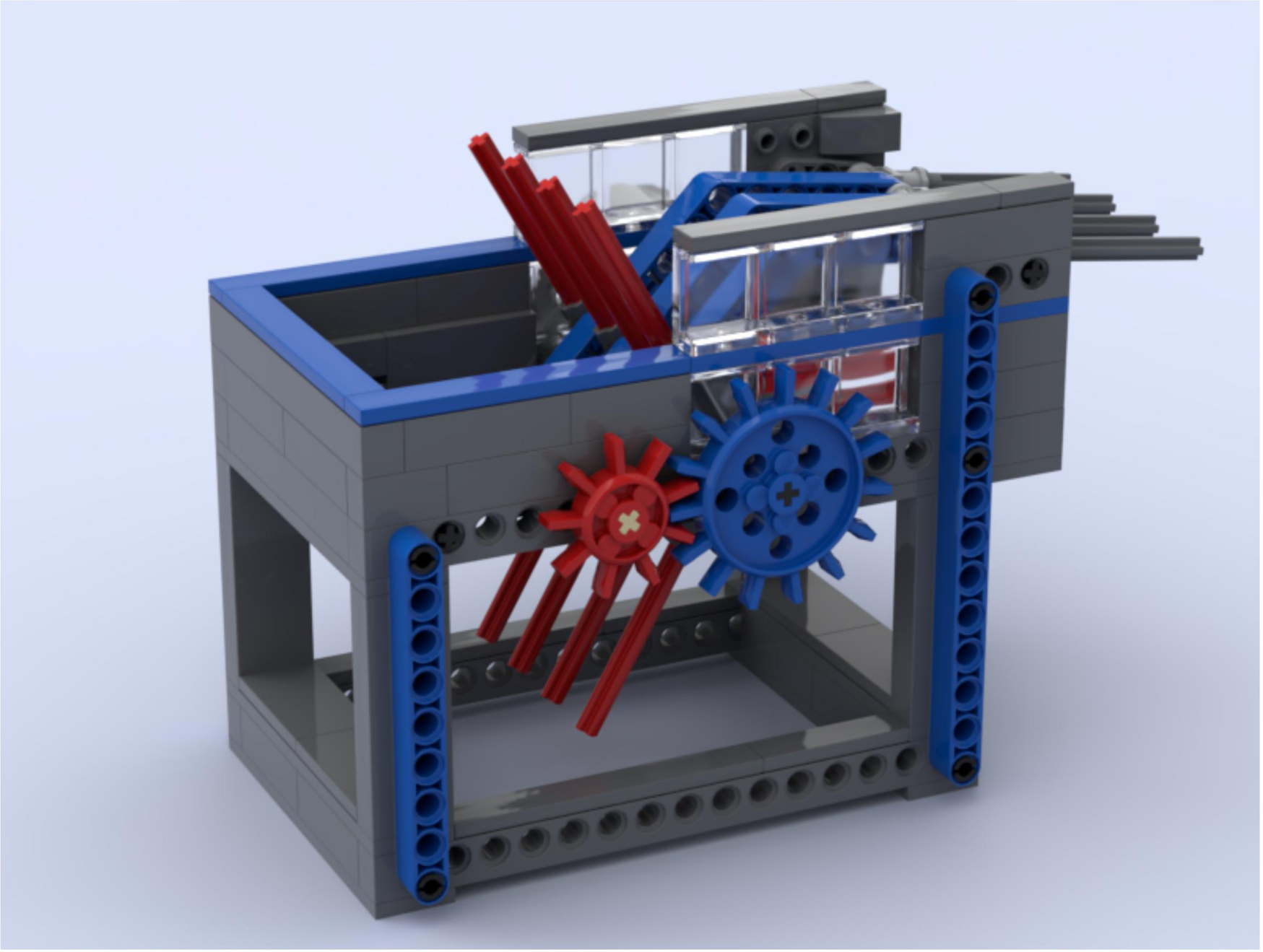

173 pieces

1

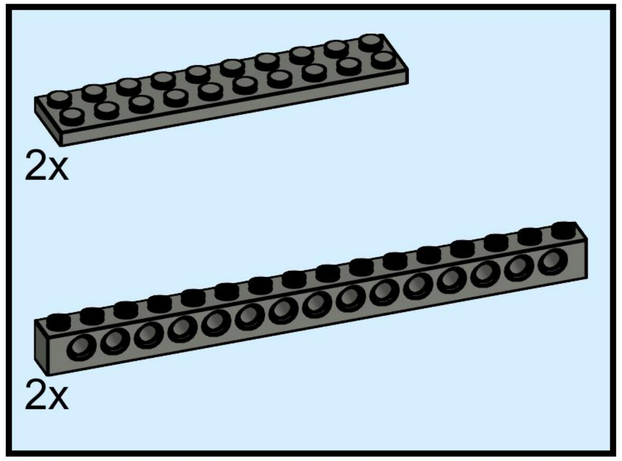

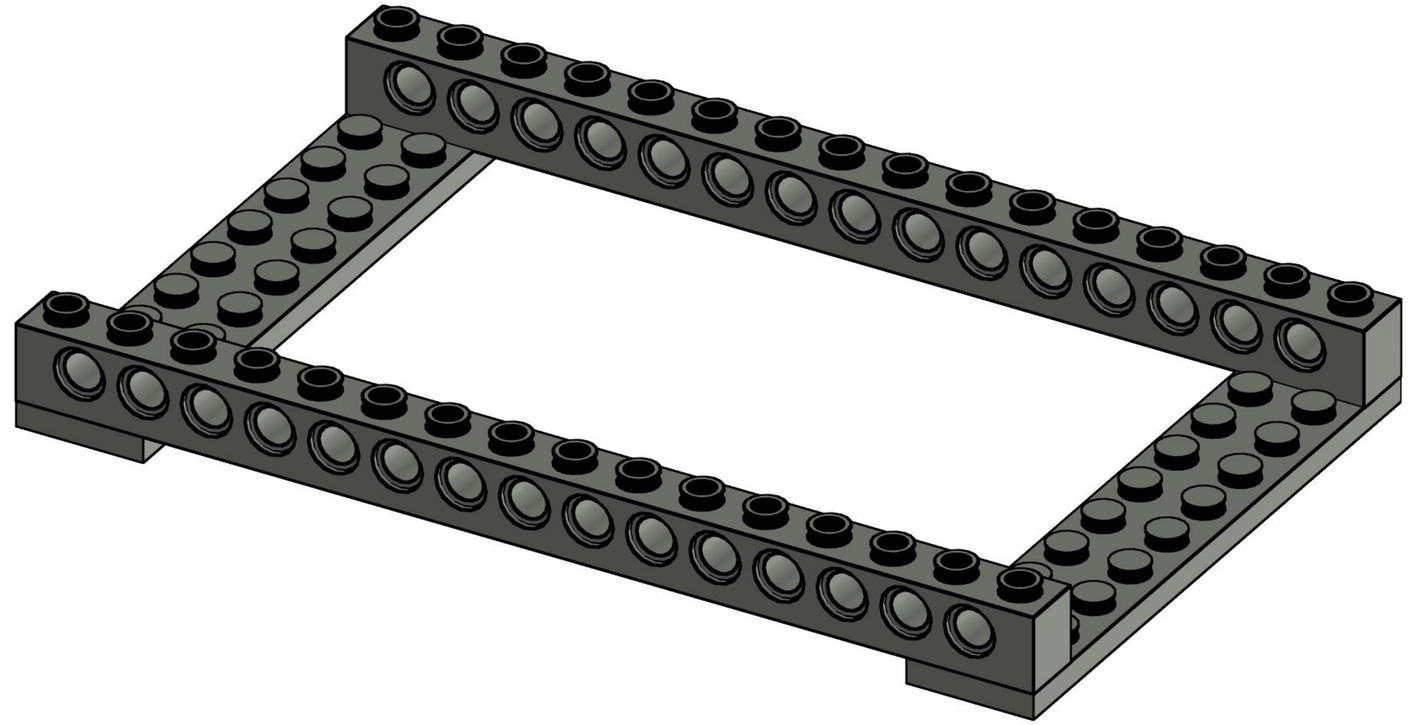

2

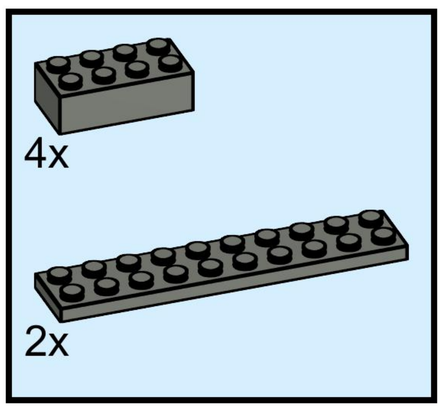

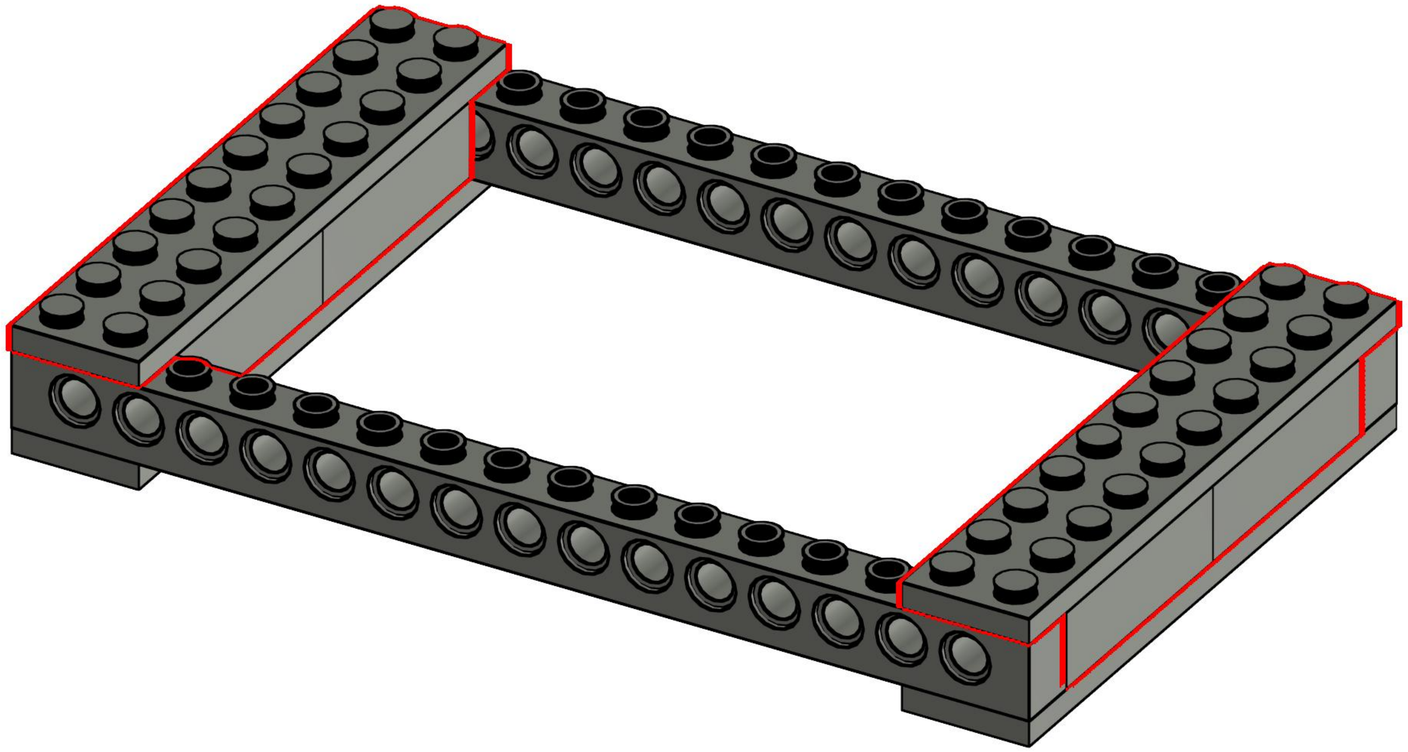

3

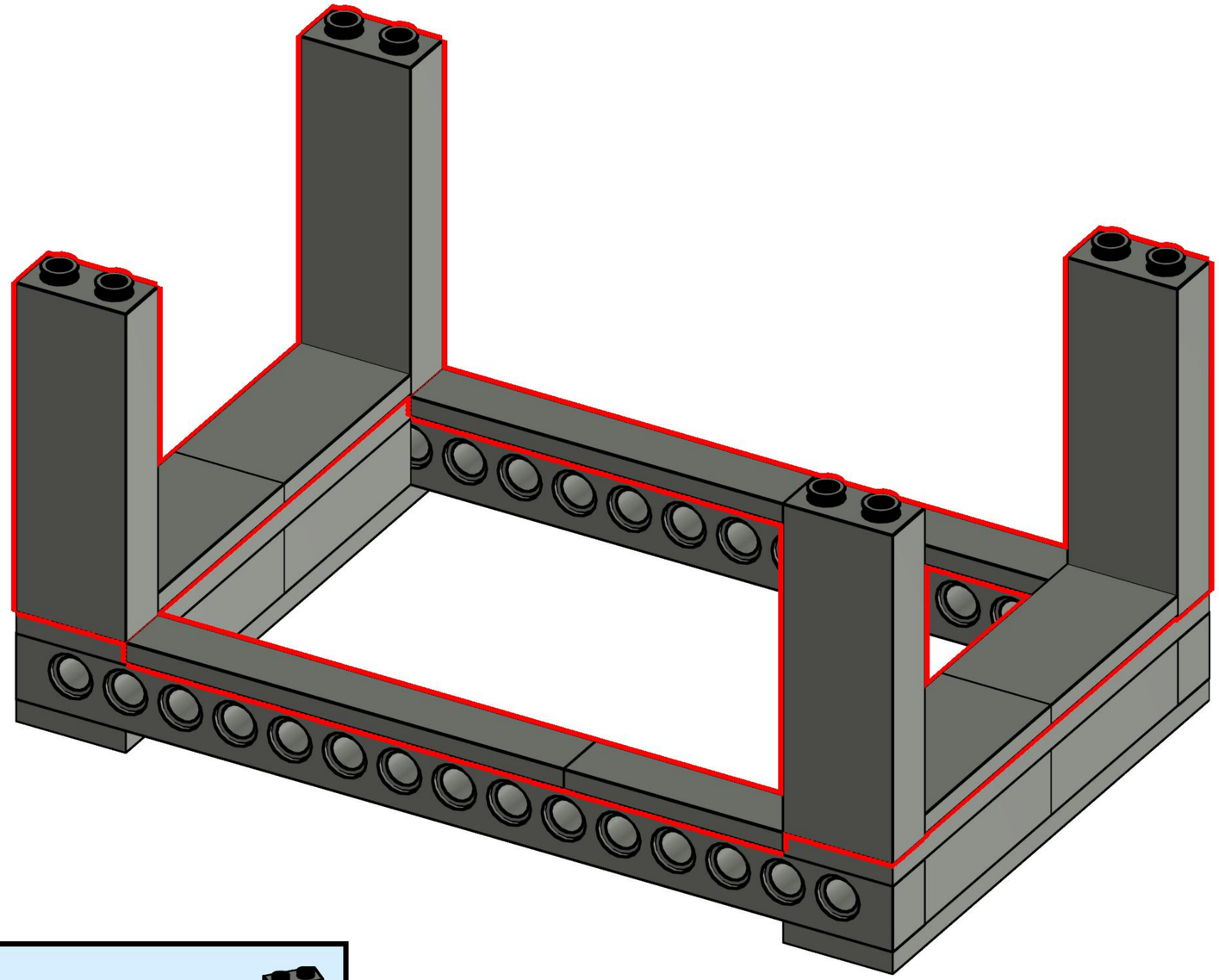

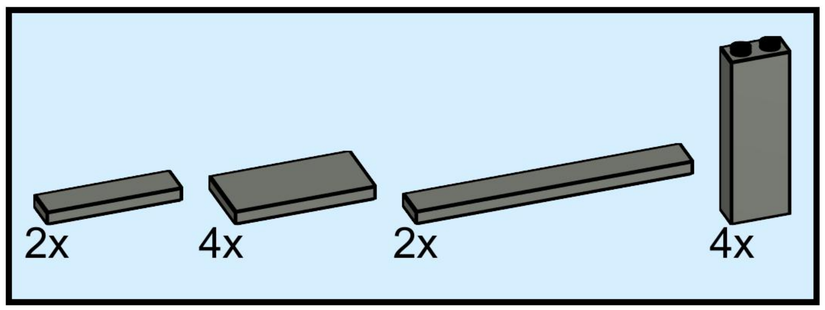

4

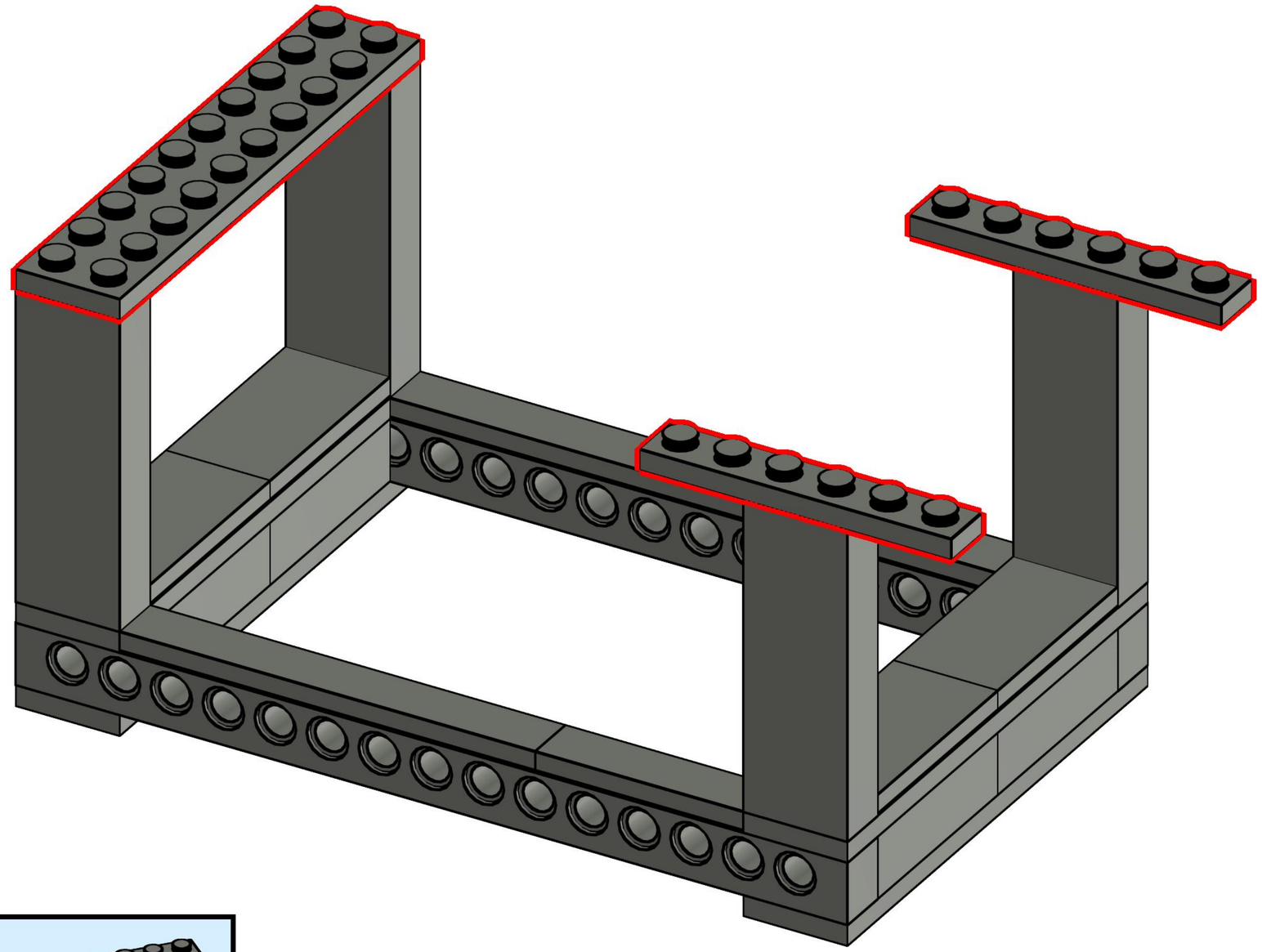

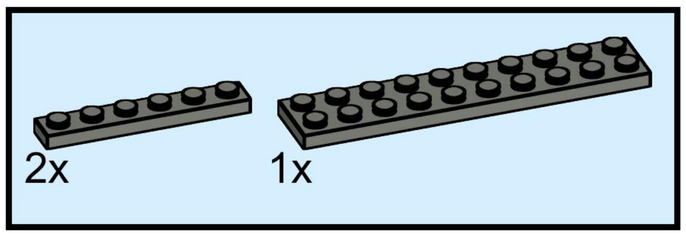

5

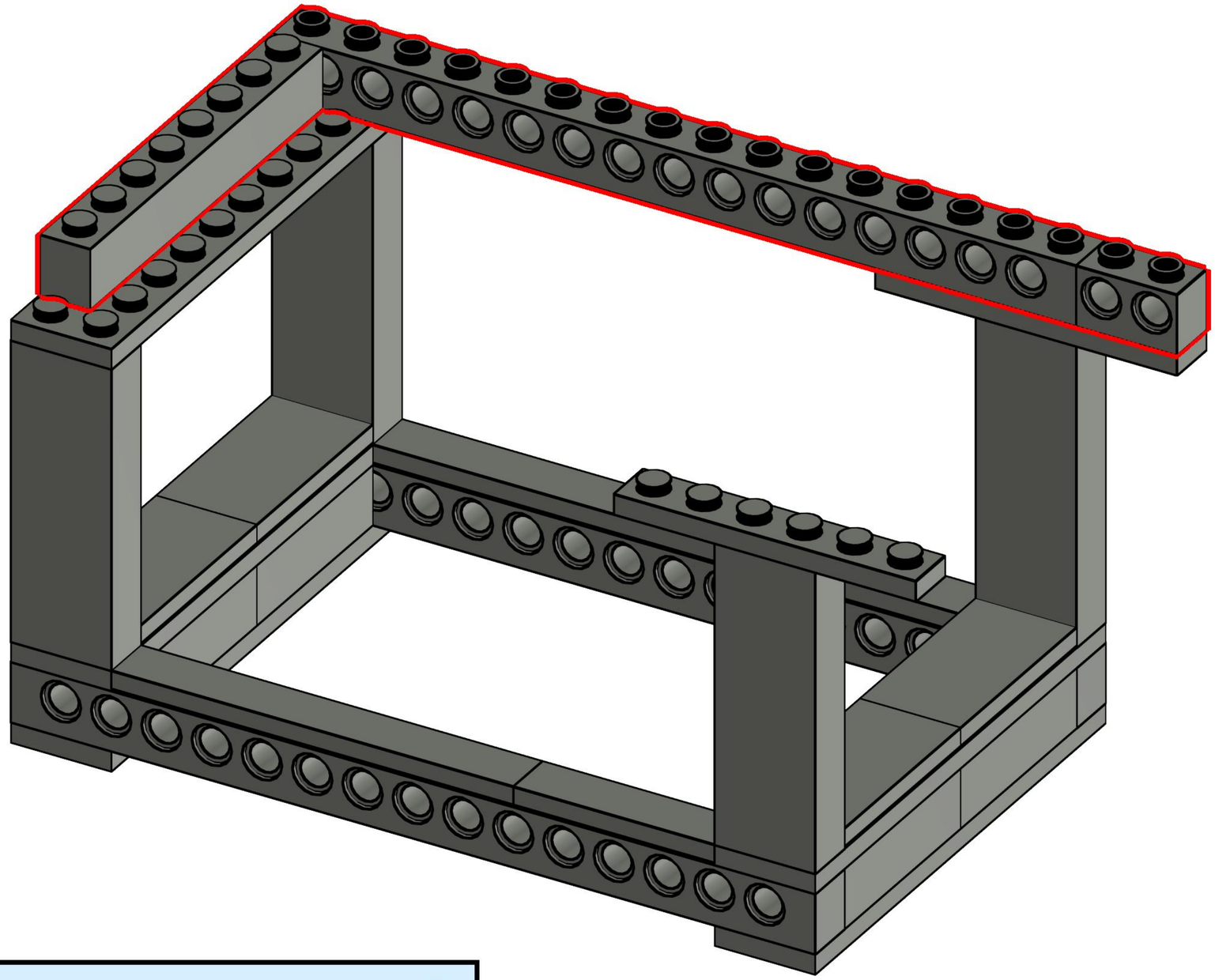

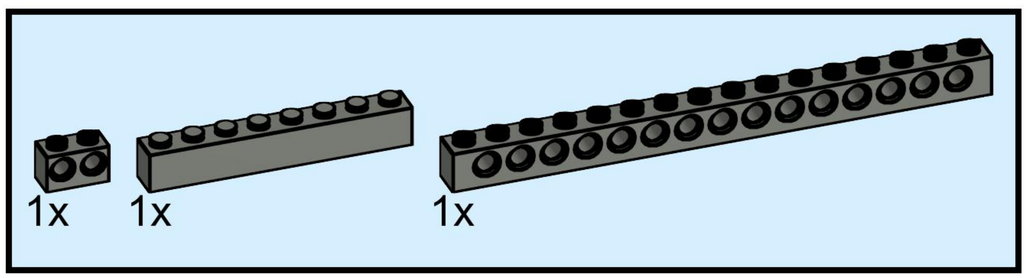

6

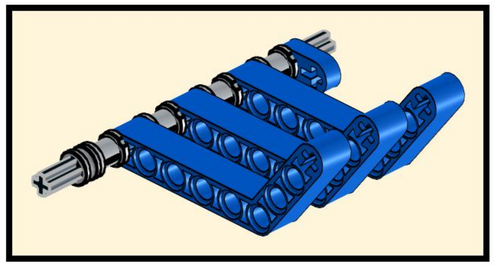

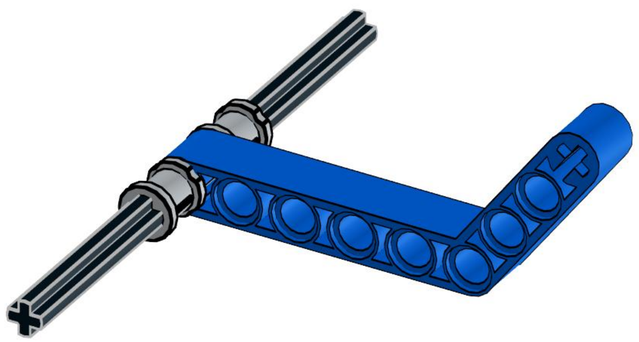

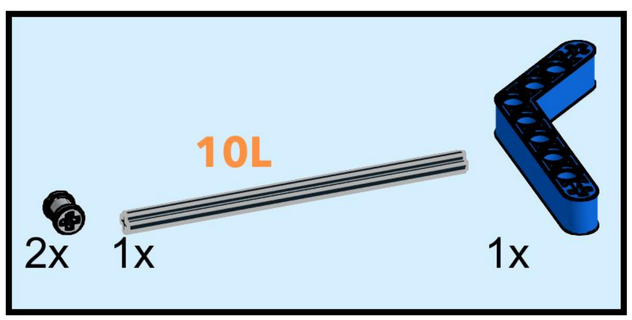

7

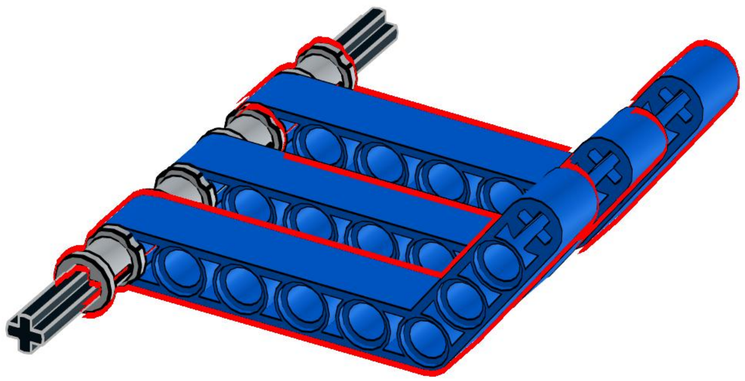

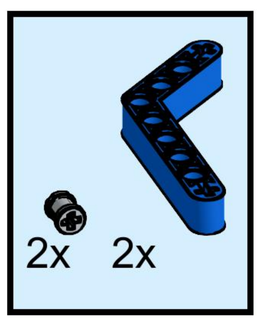

8

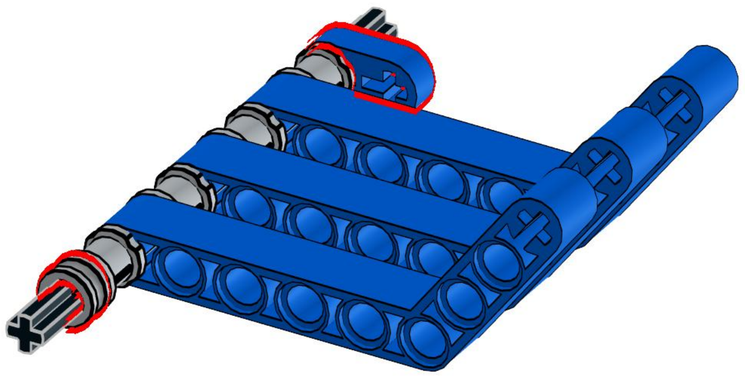

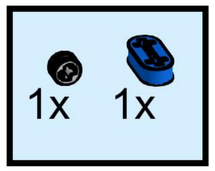

9

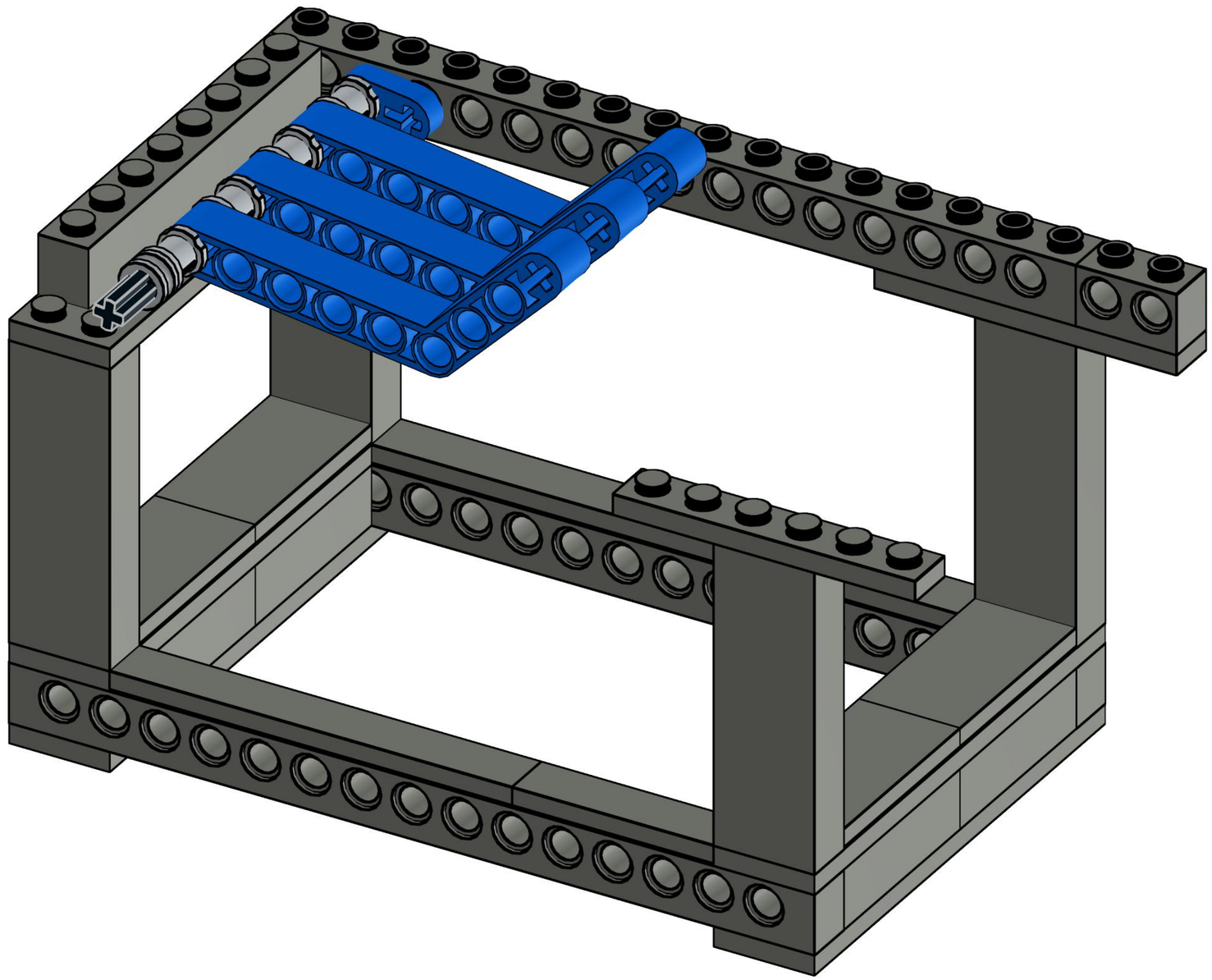

10

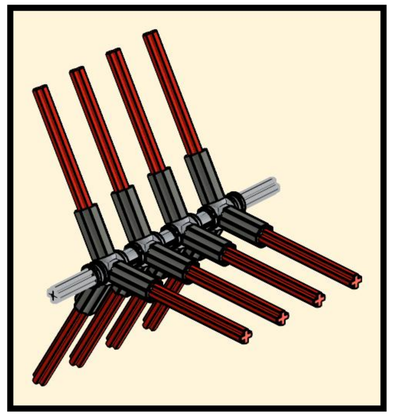

11

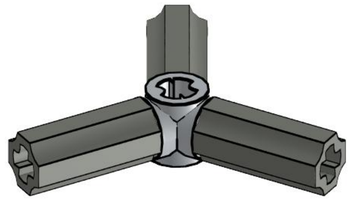

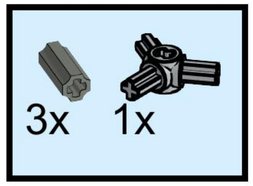

12

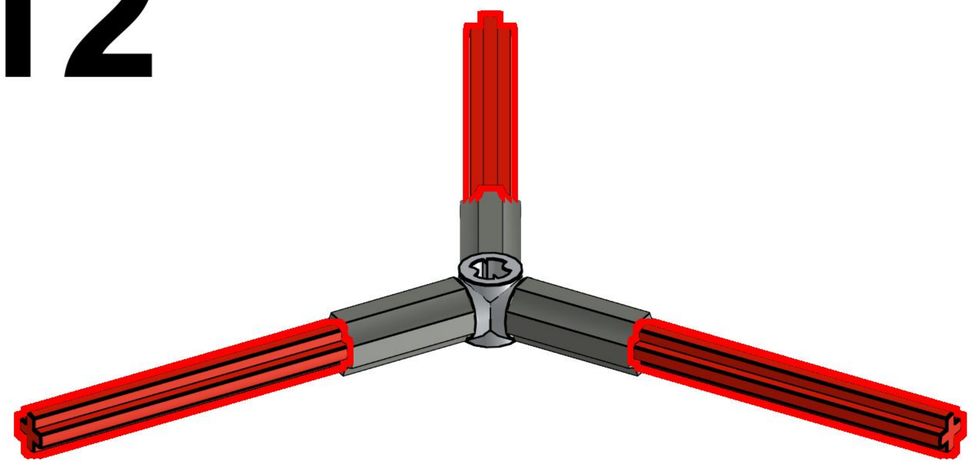

13

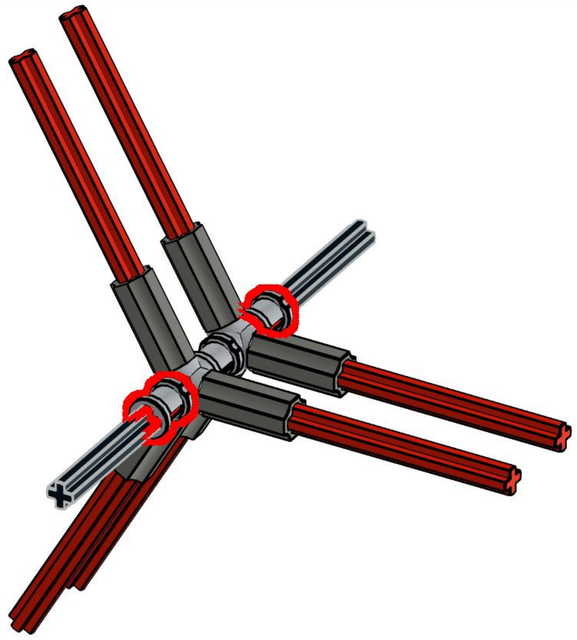

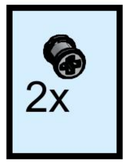

14

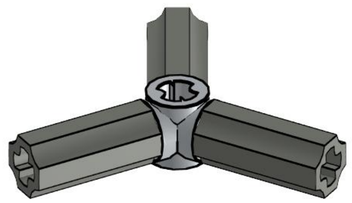

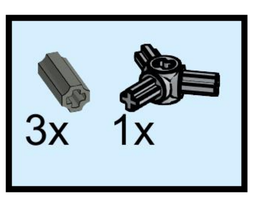

15

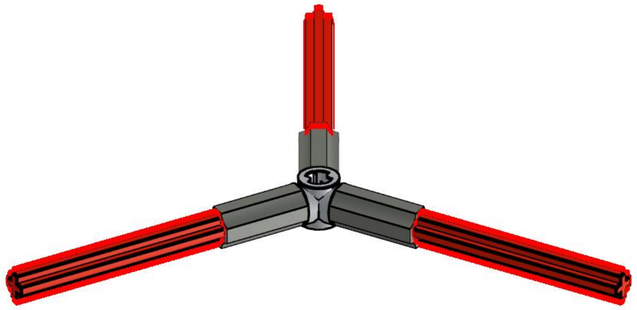

16

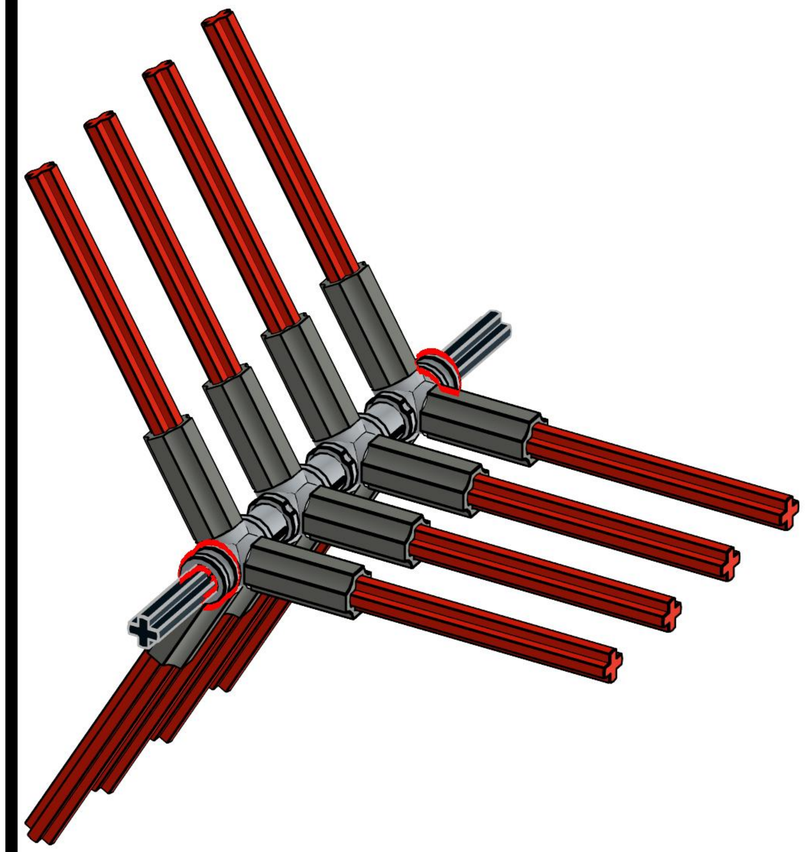

17

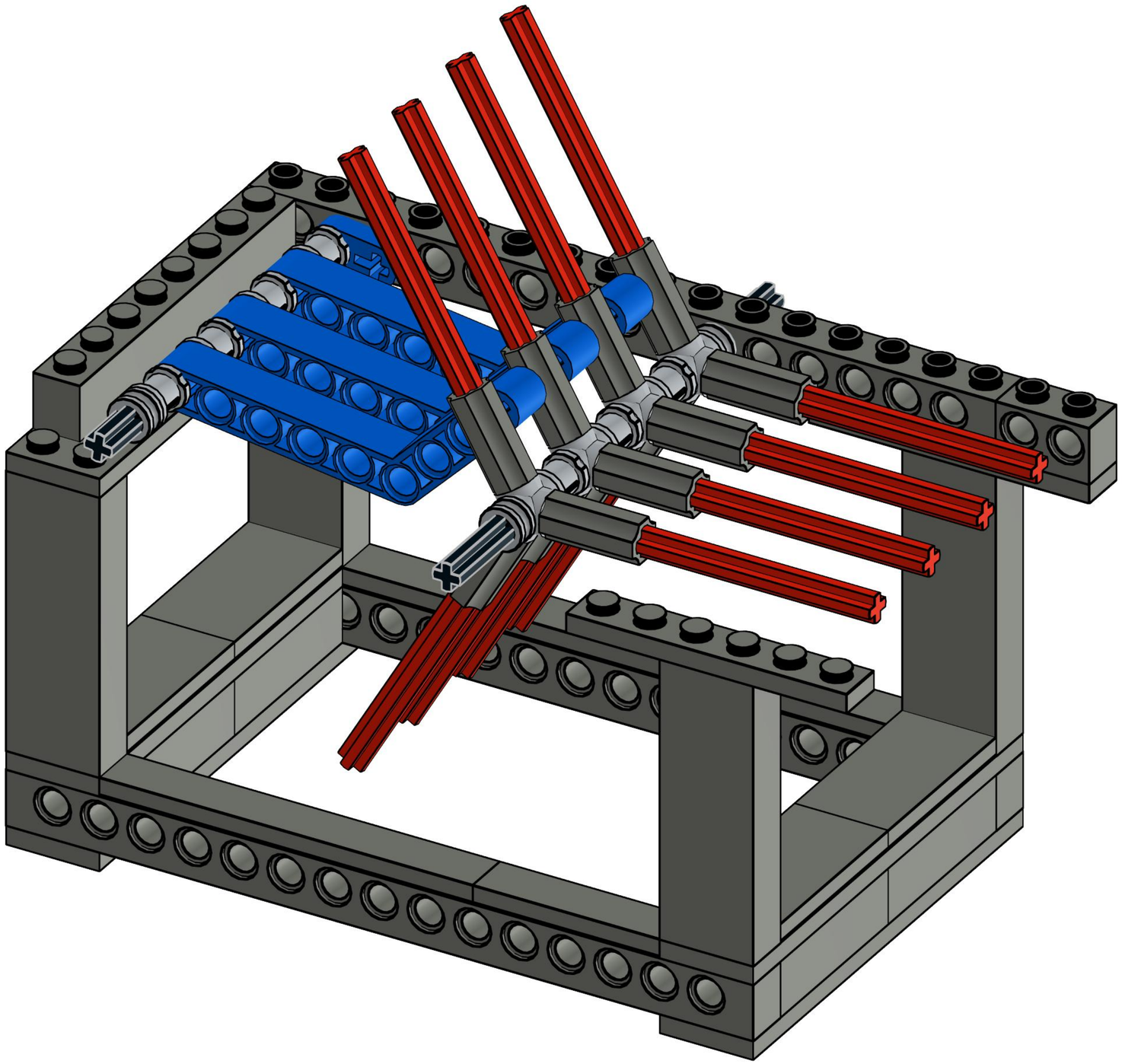

18

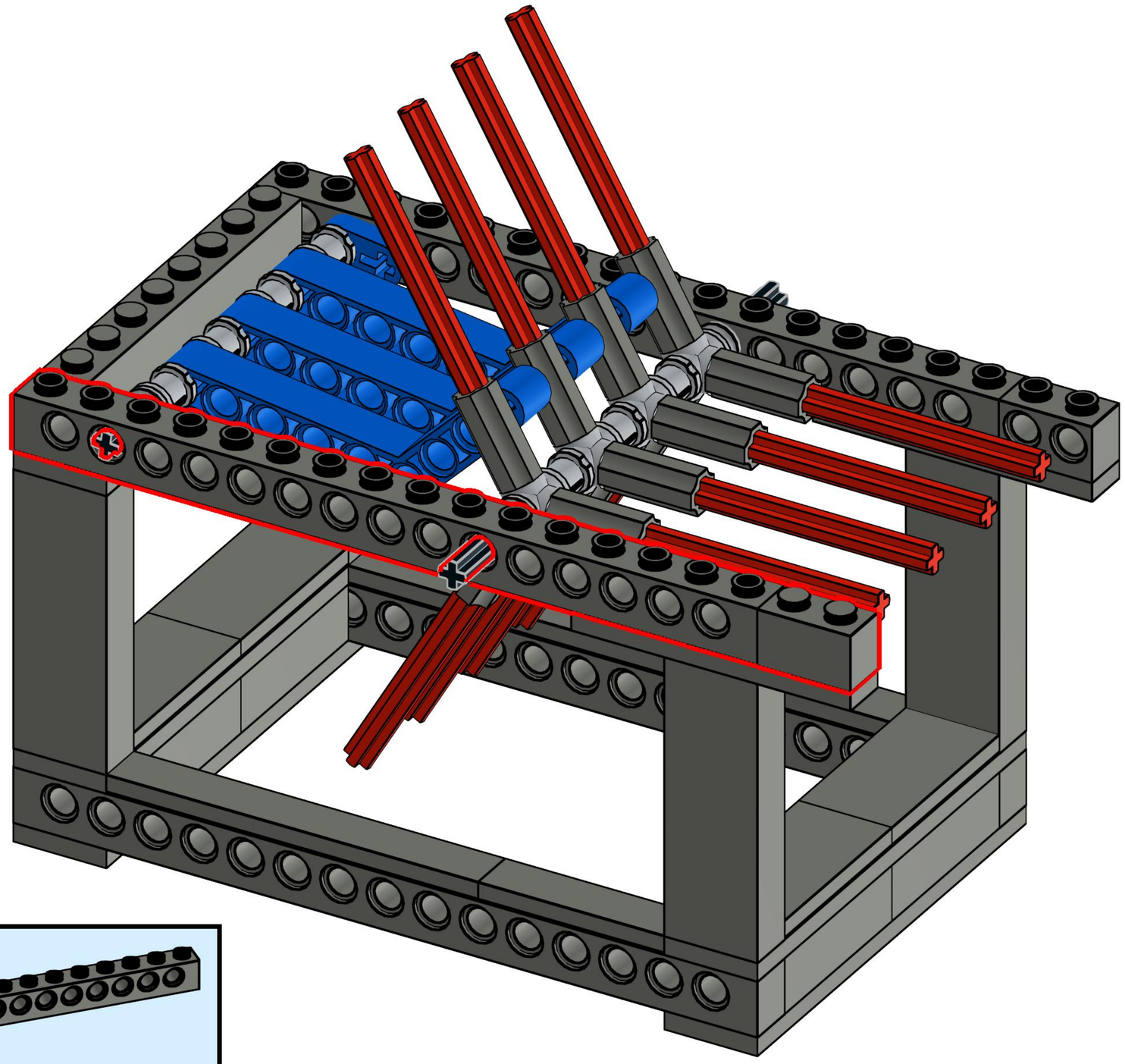

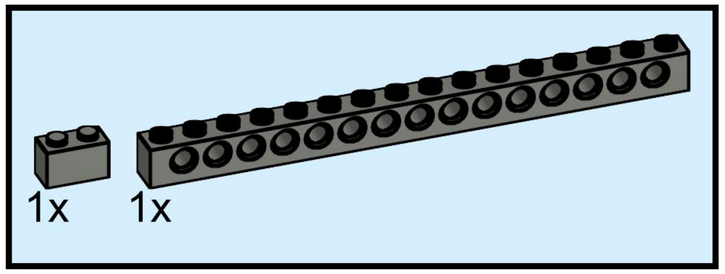

19

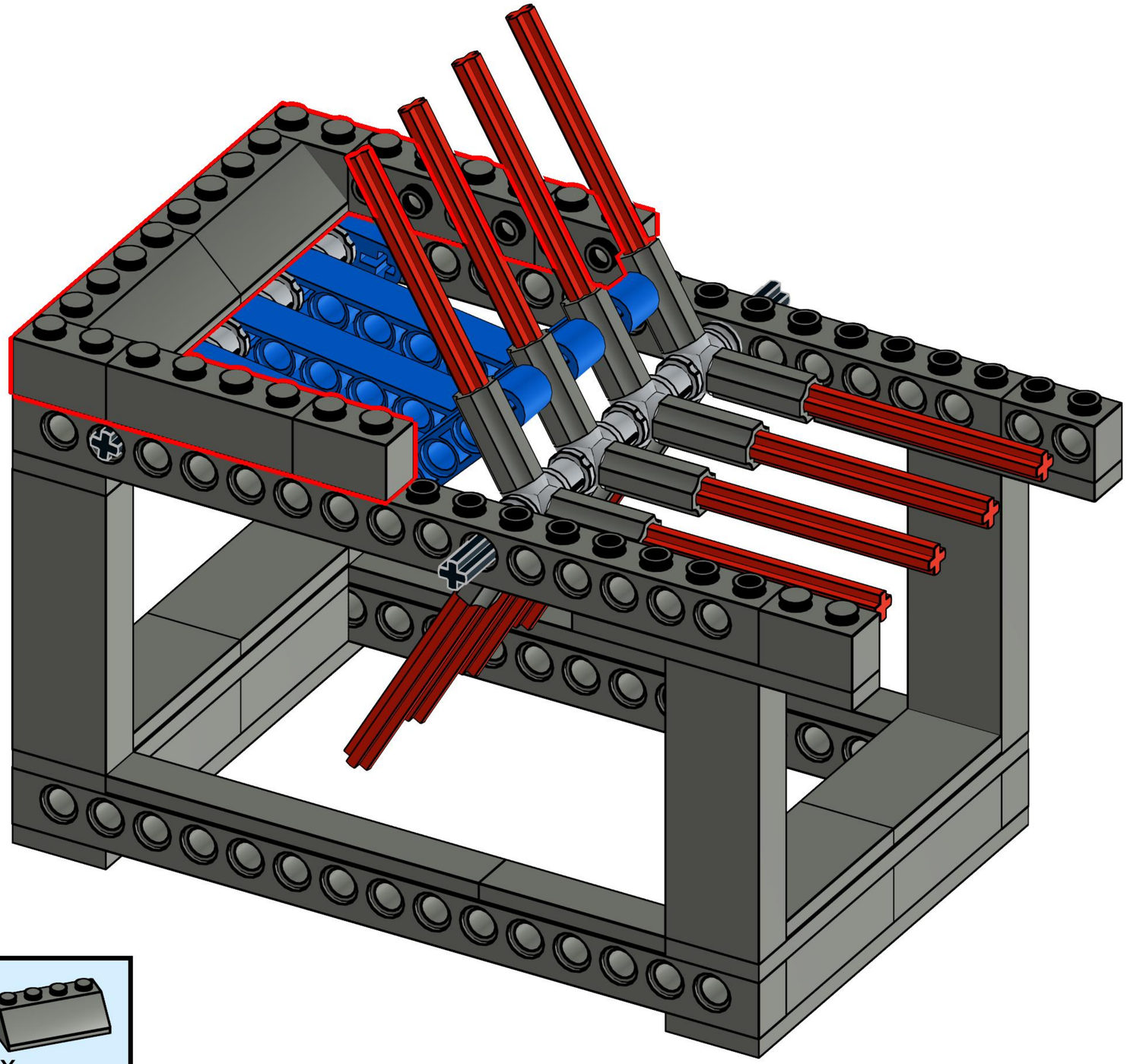

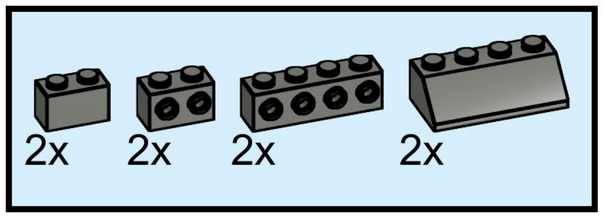

20

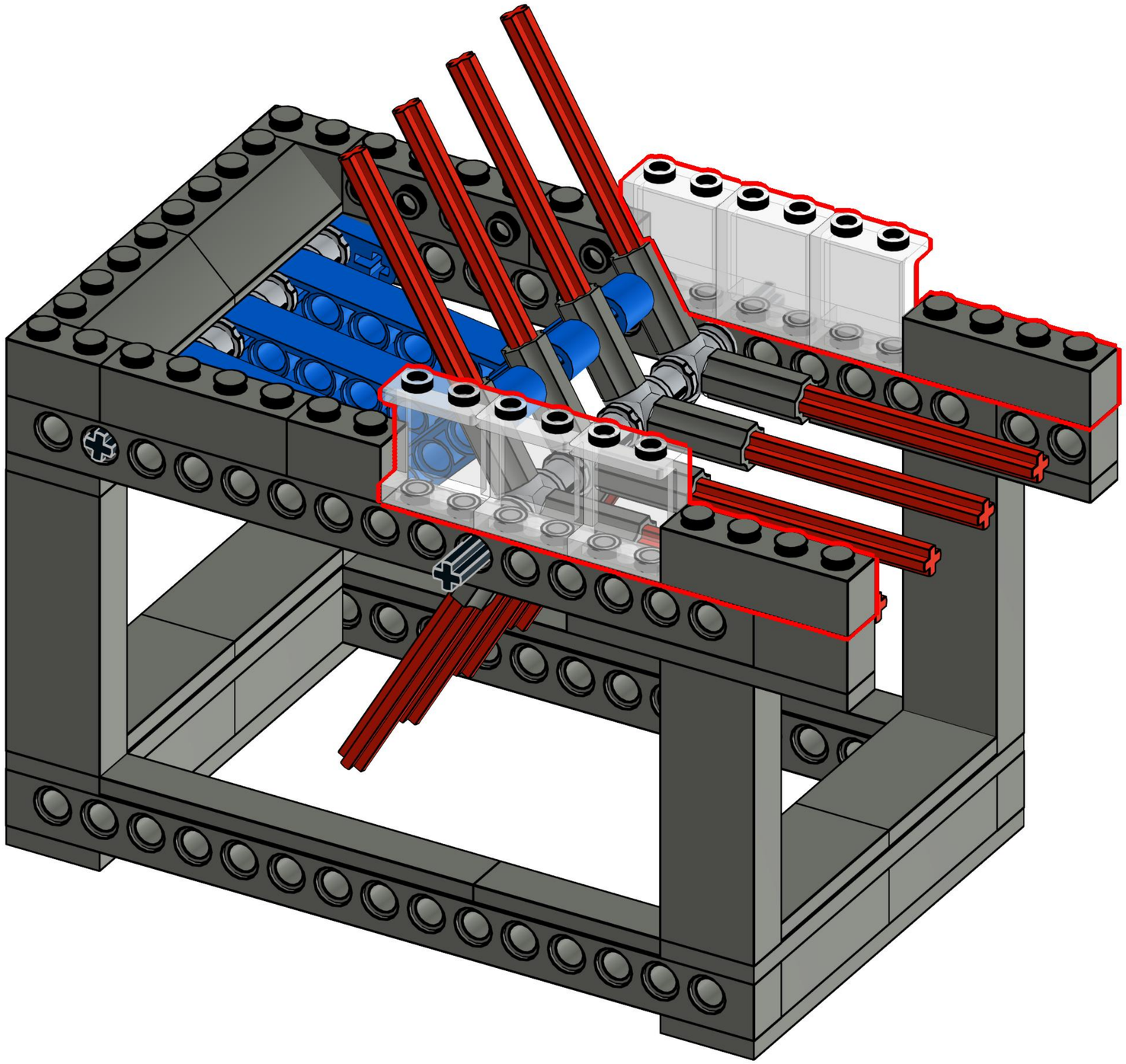

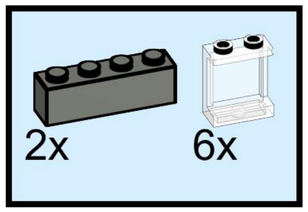

21

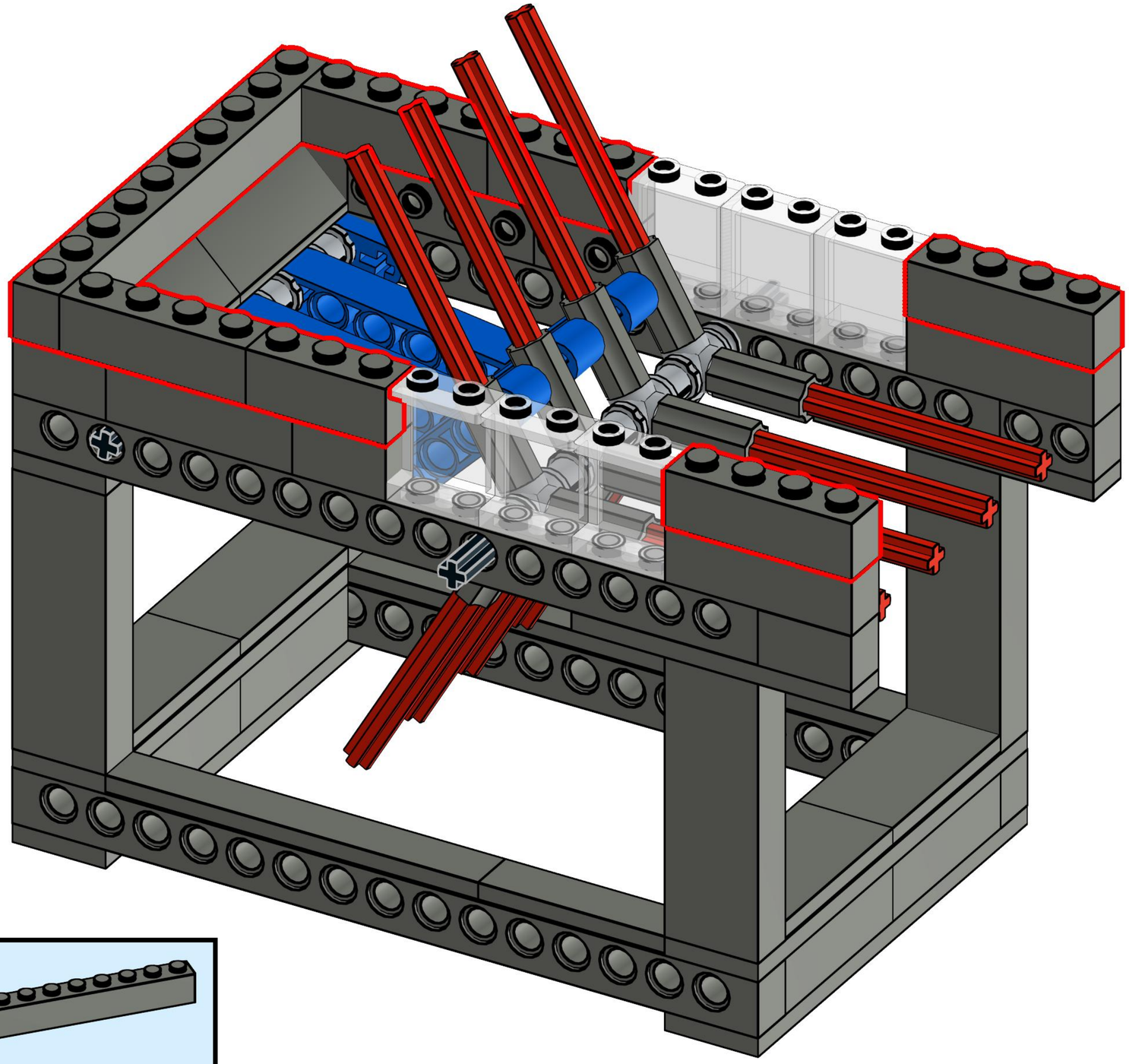

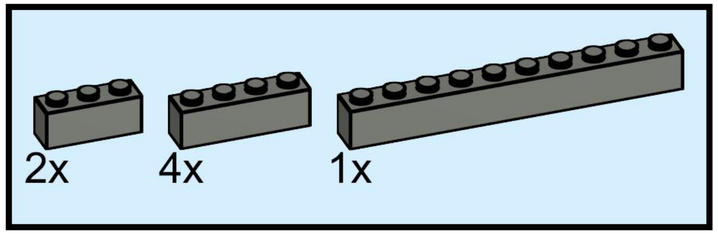

22

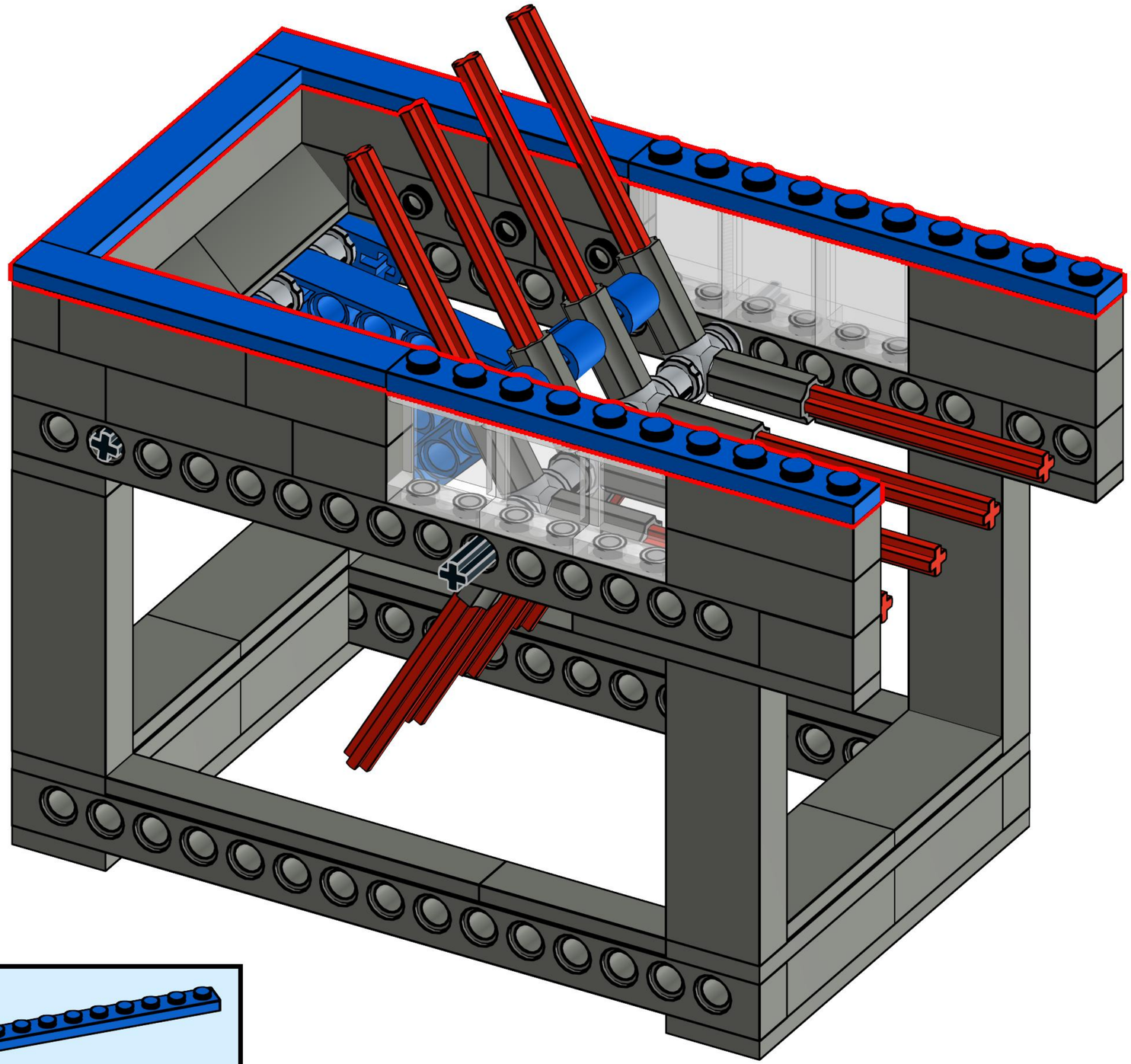

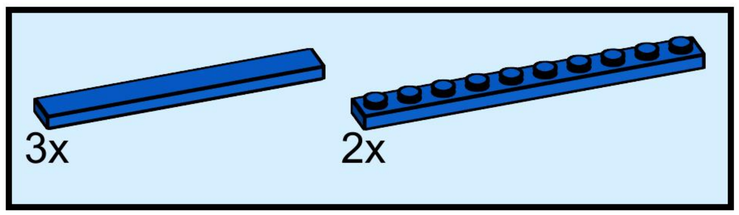

23

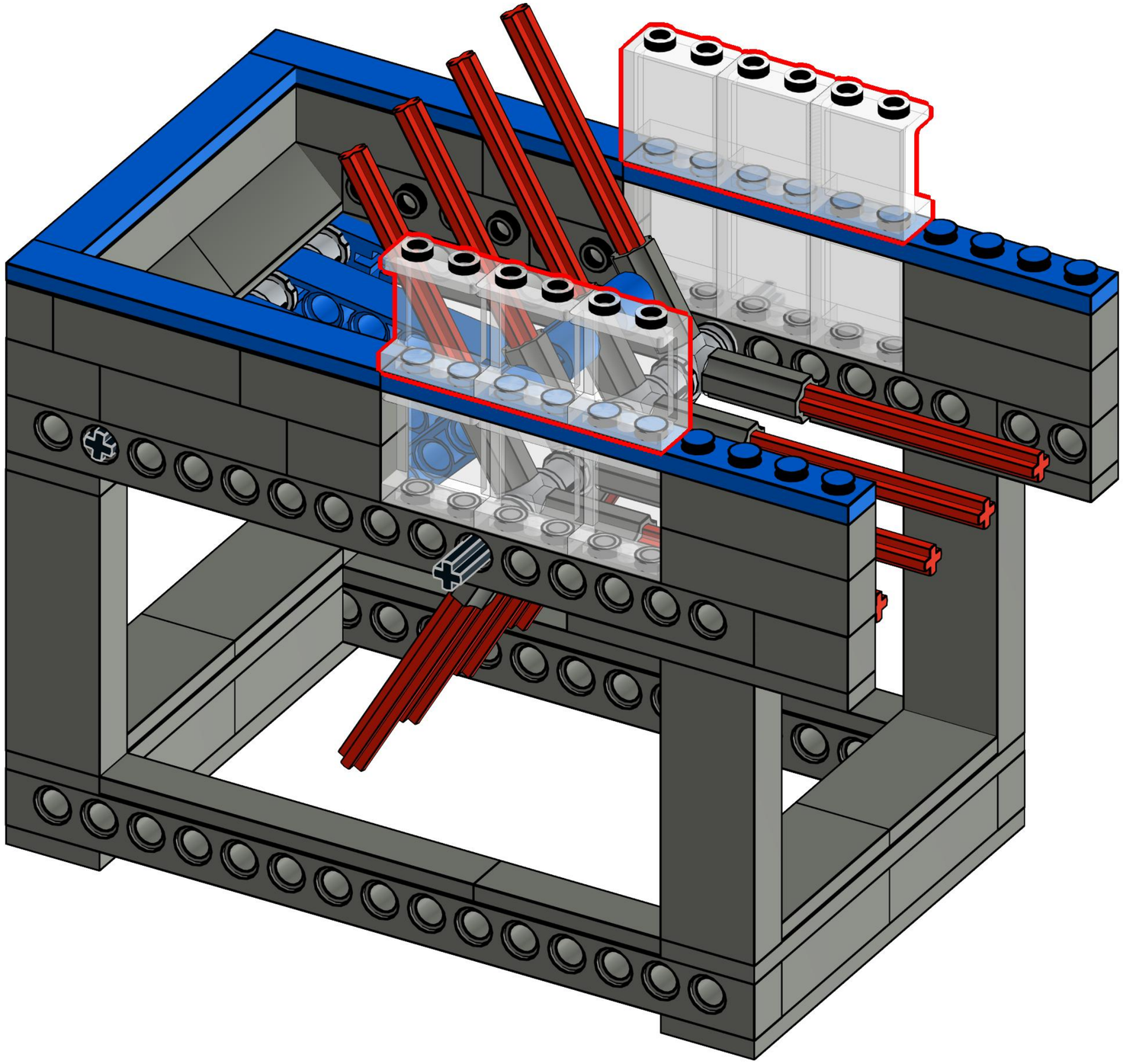

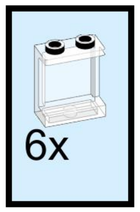

24

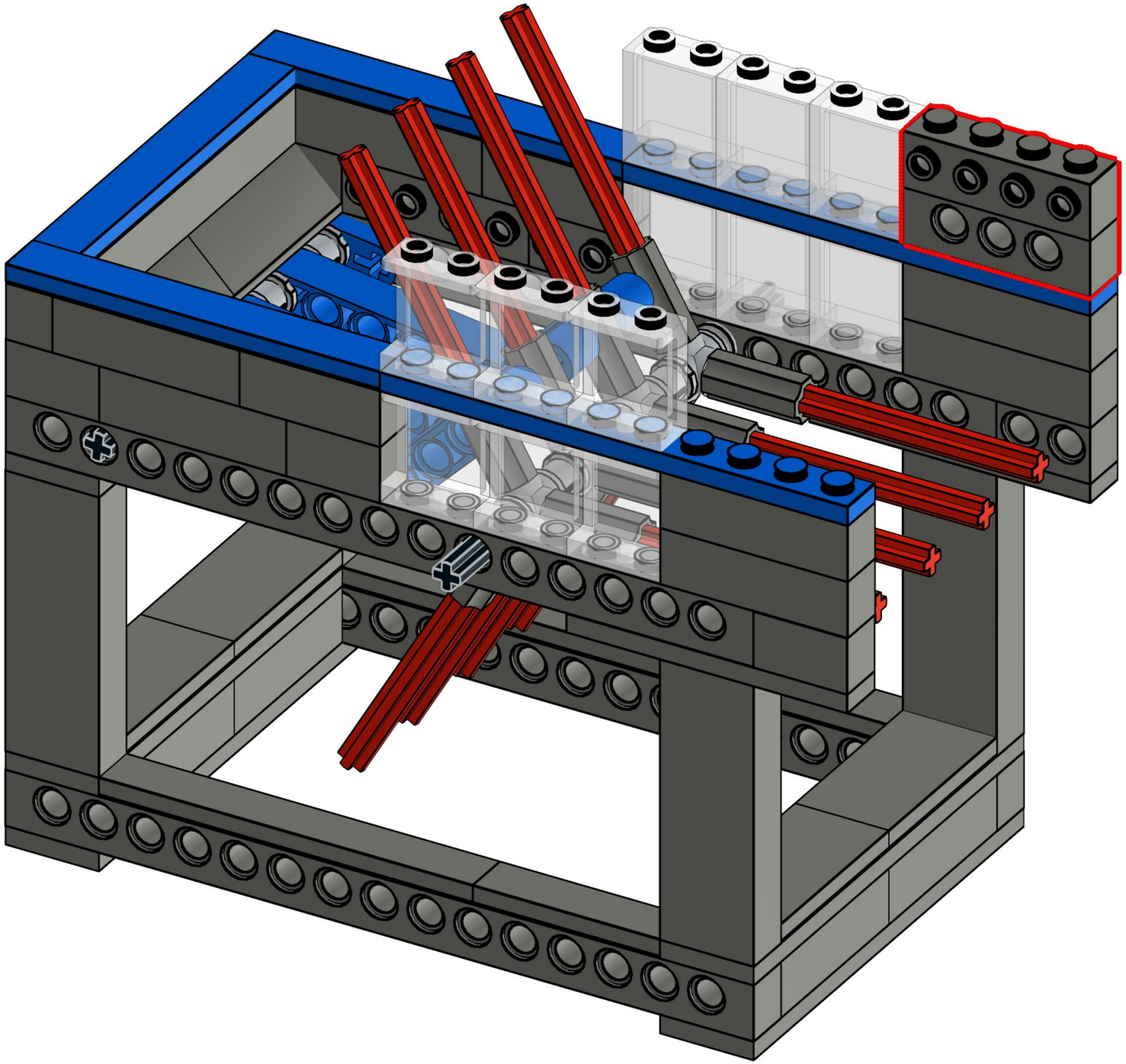

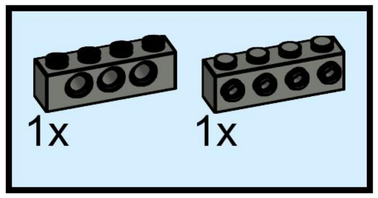

25

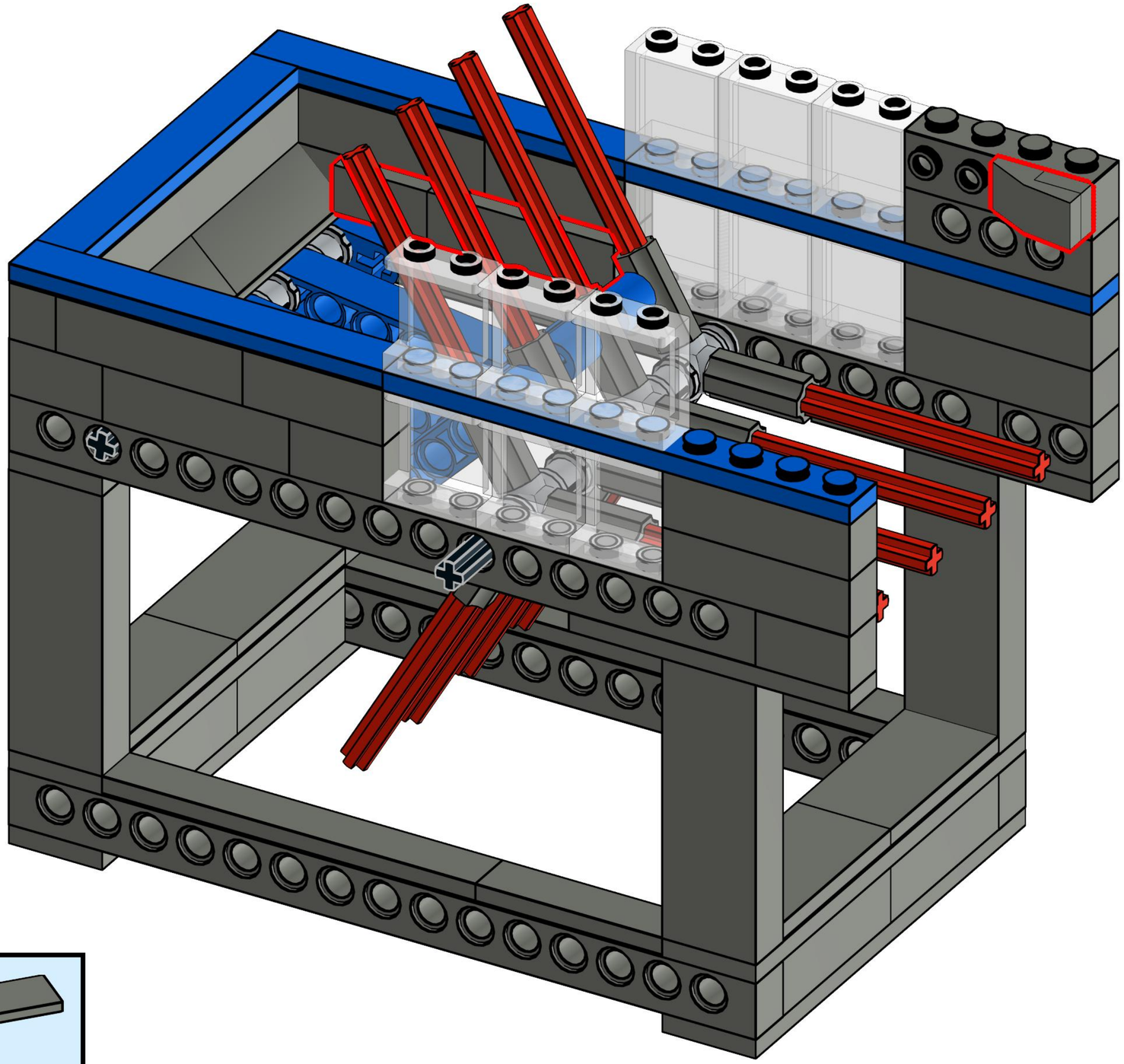

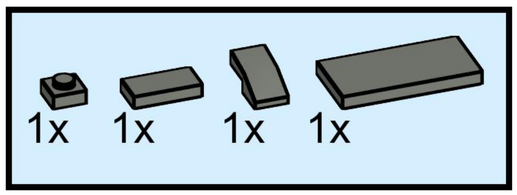

26

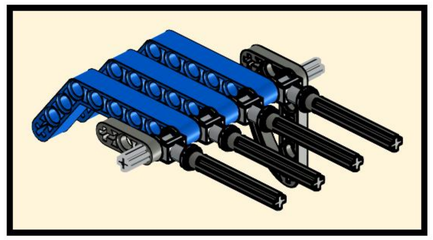

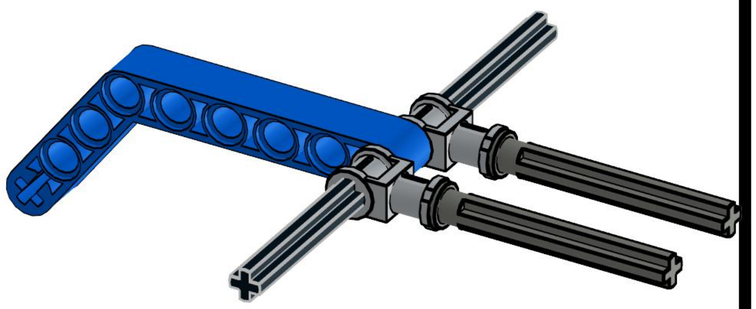

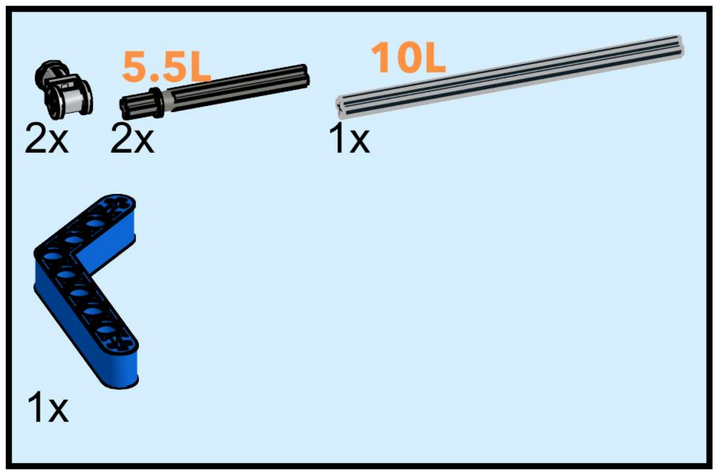

27

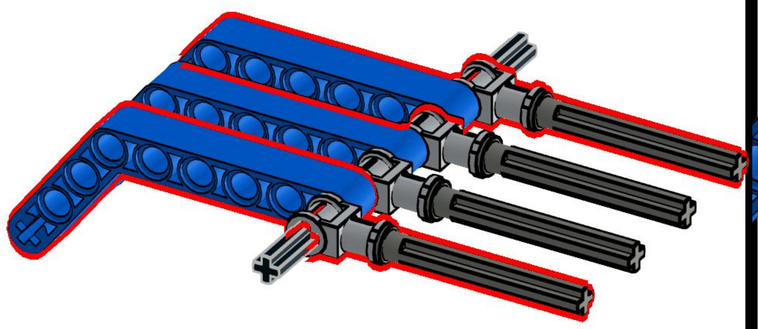

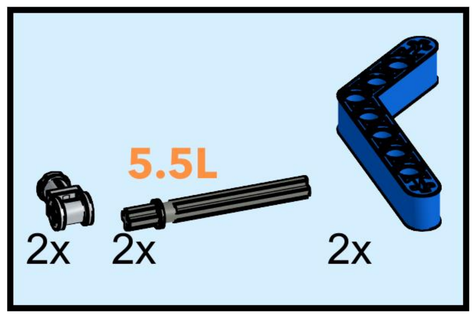

28

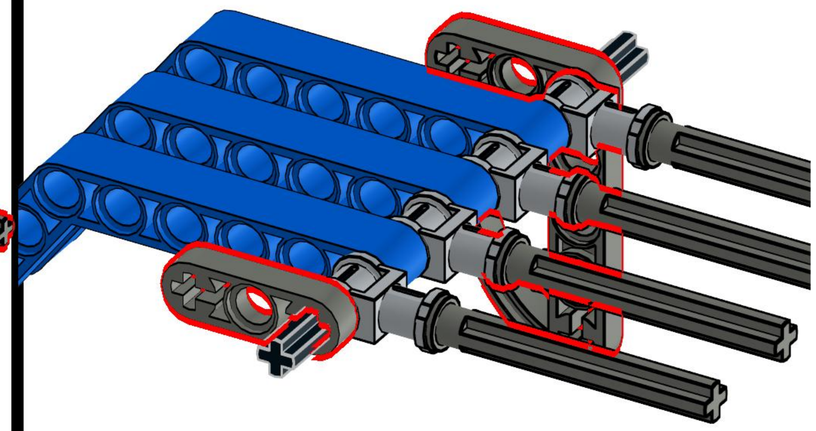

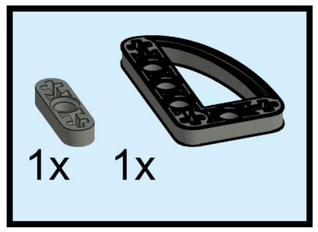

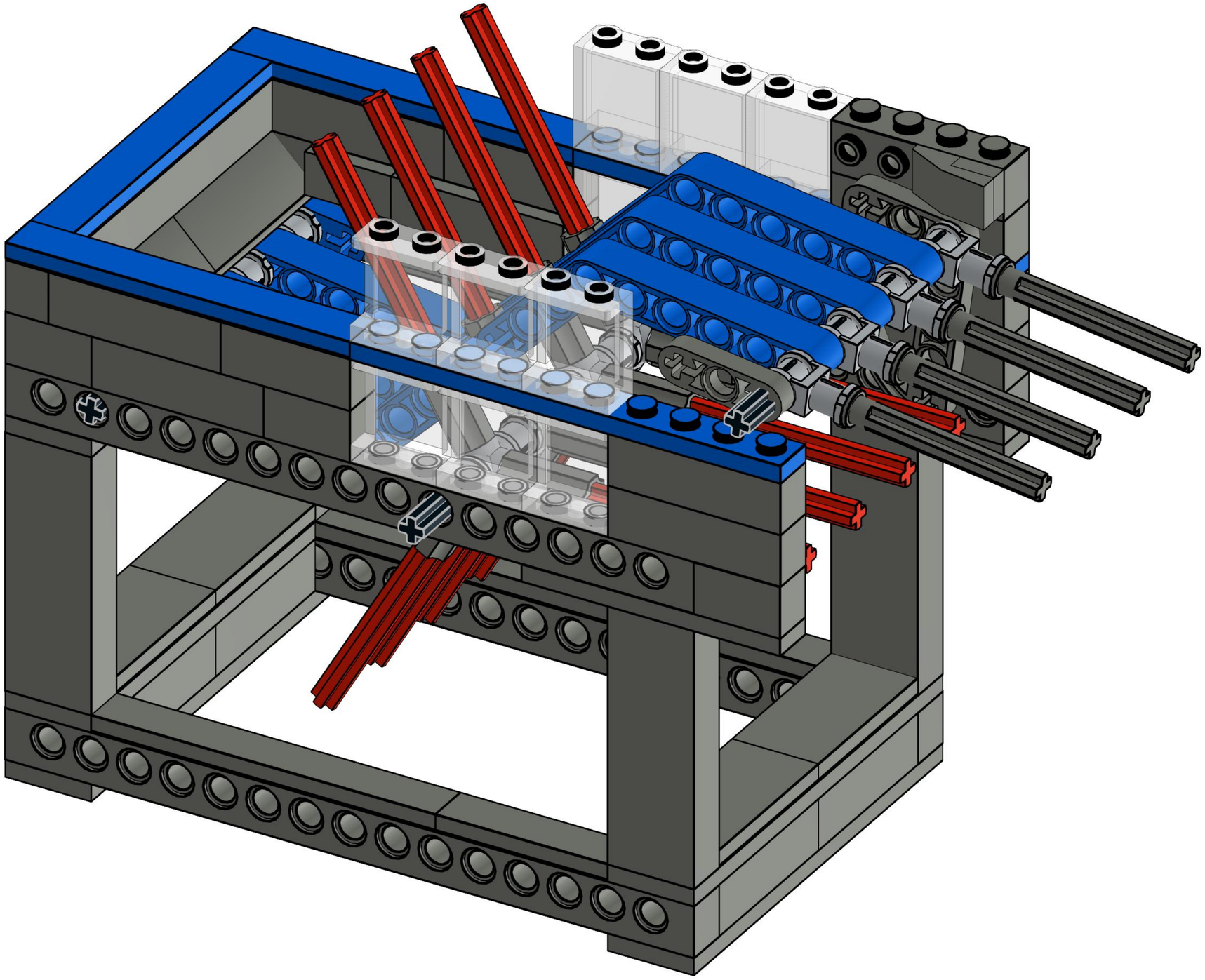

30

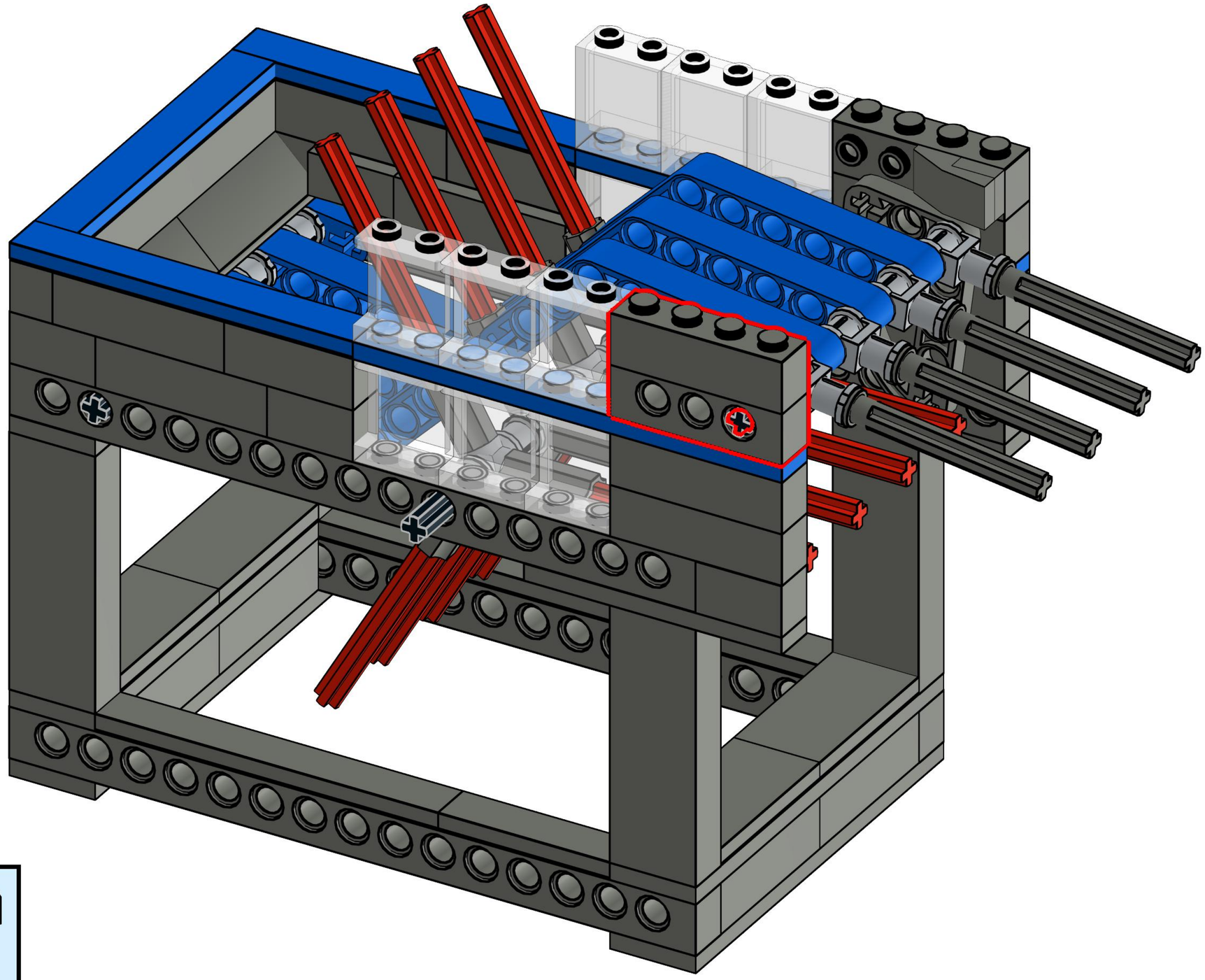

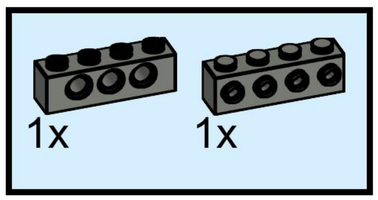

31

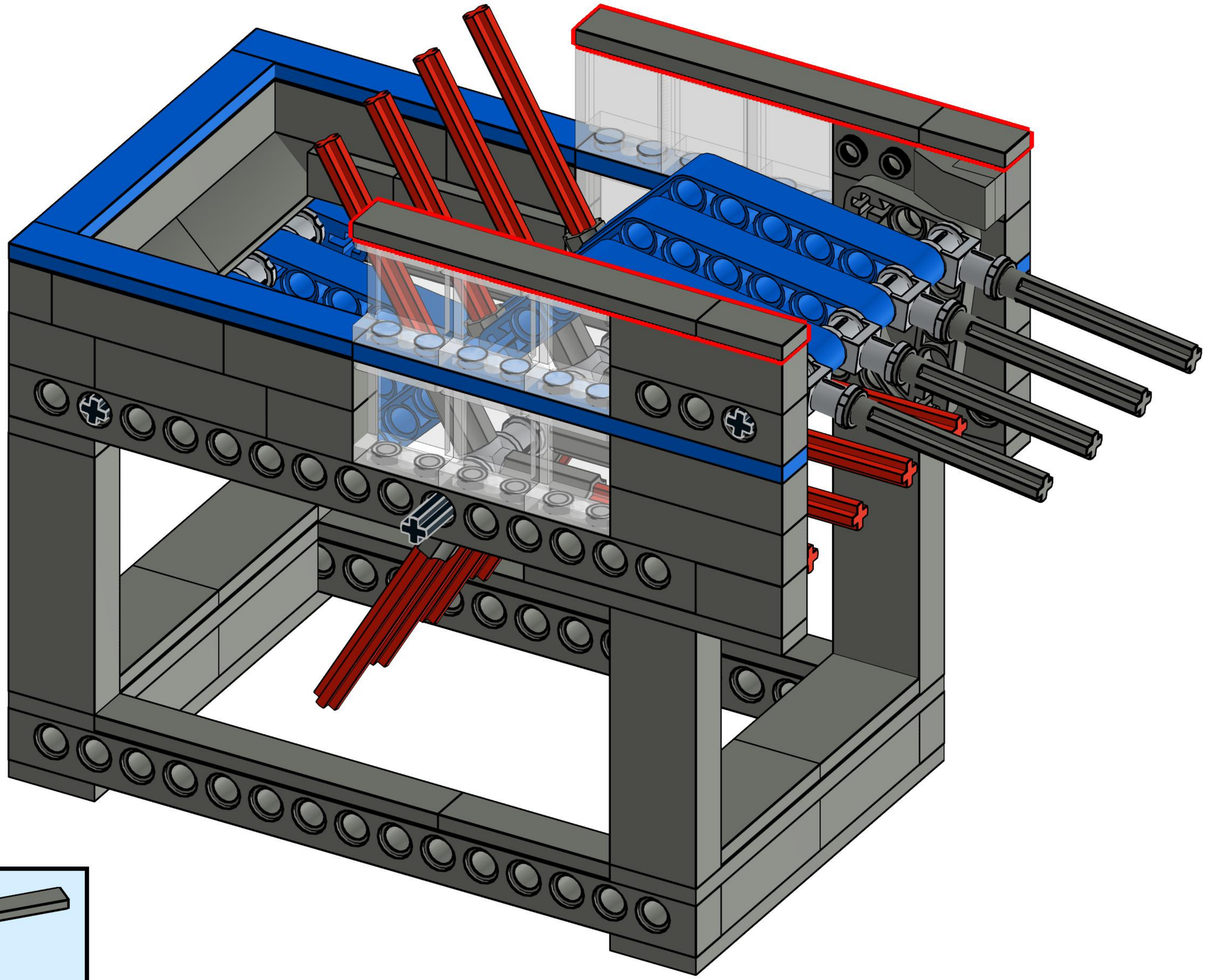

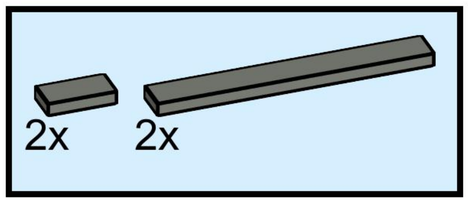

32

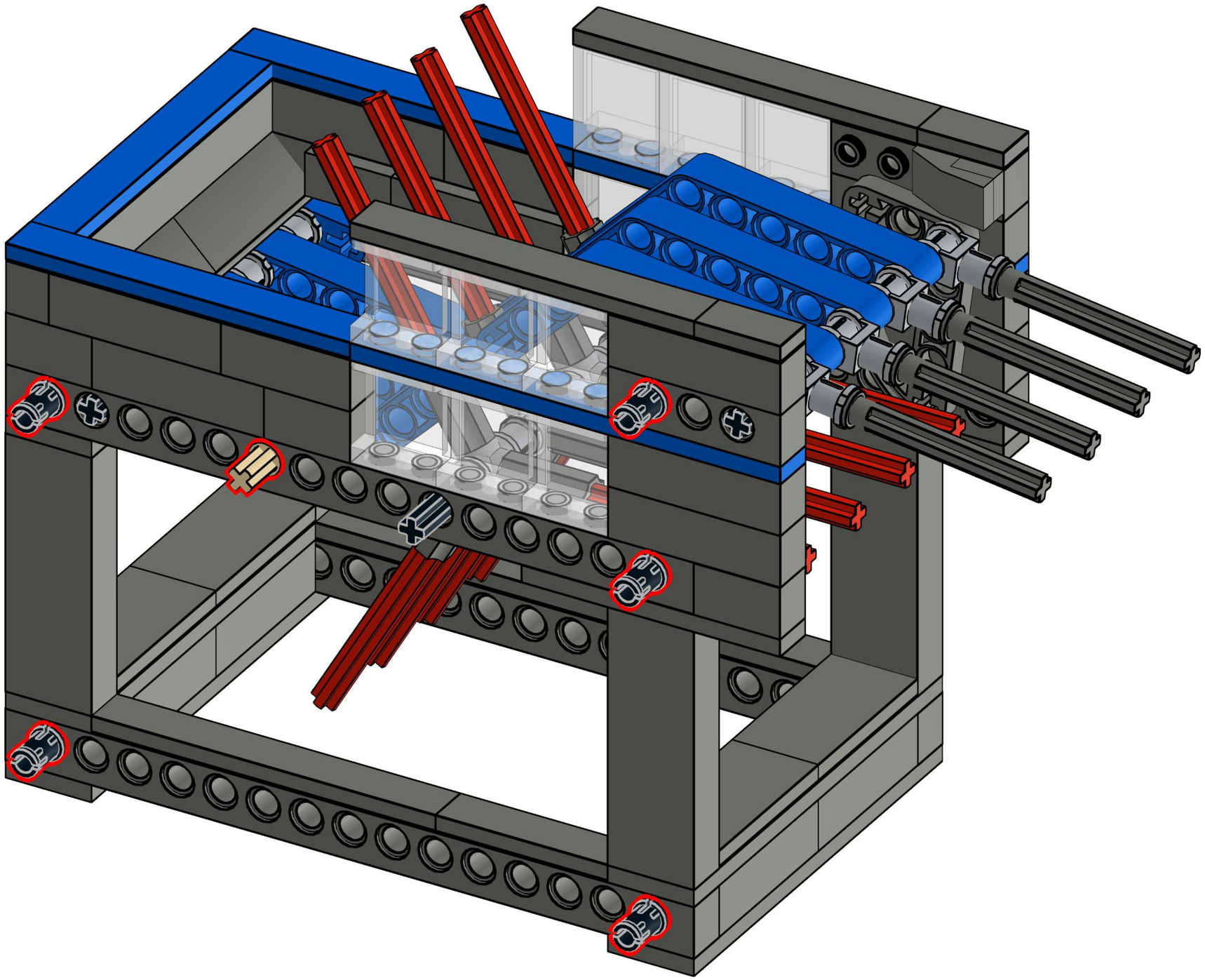

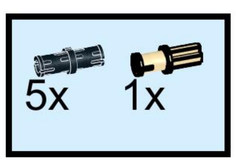

33

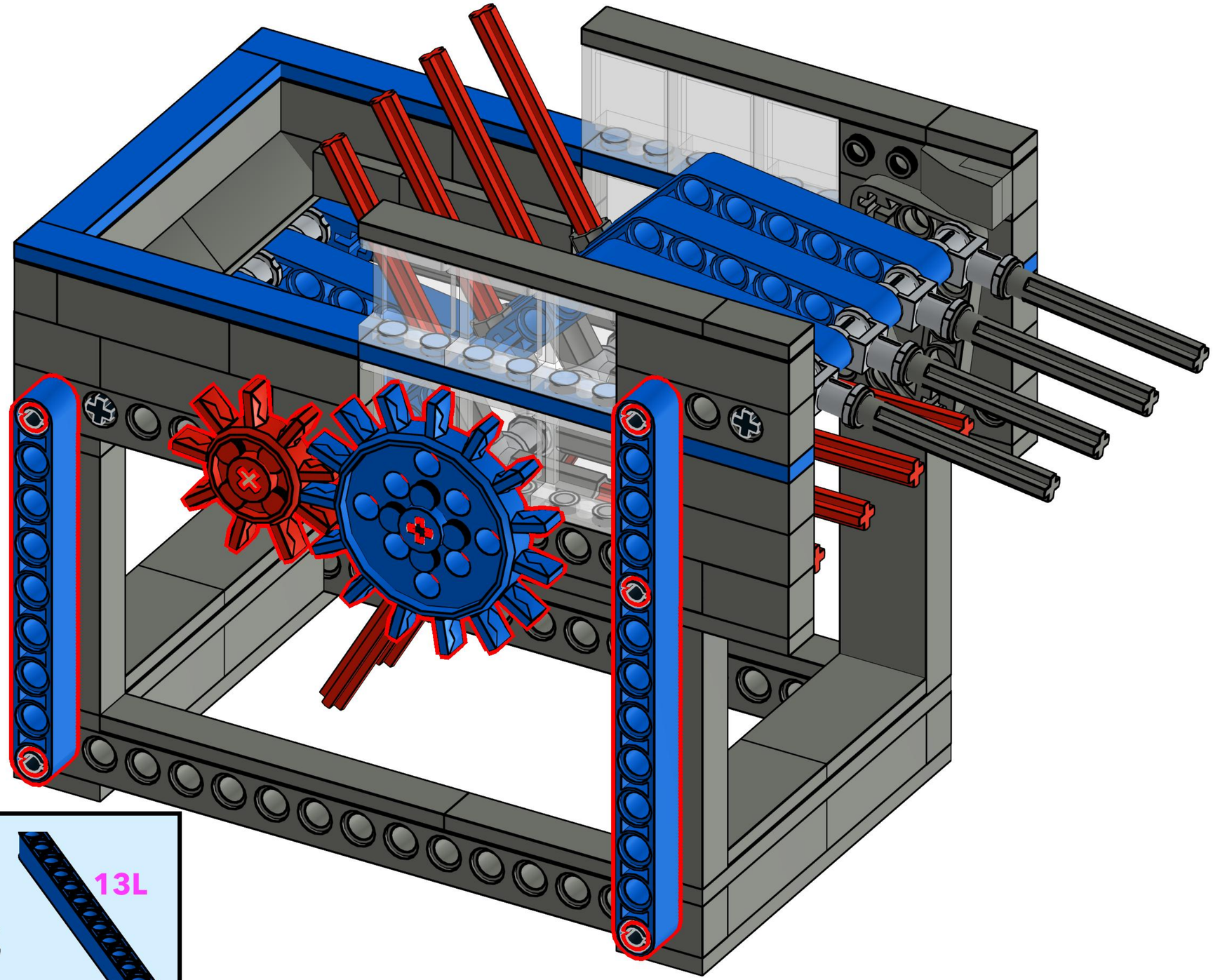

These gears are decorative and not required for the module to function.

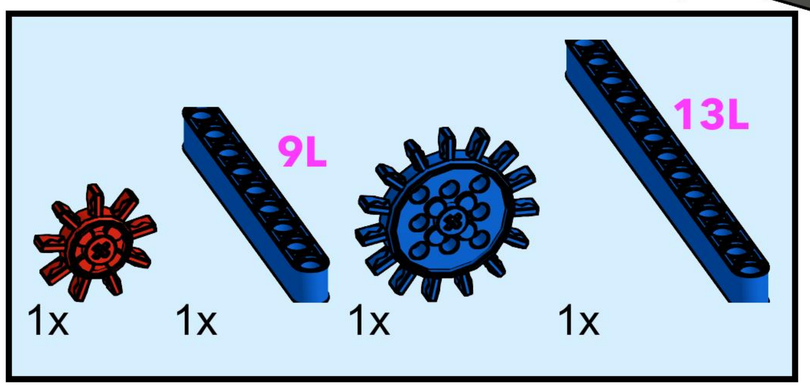

34

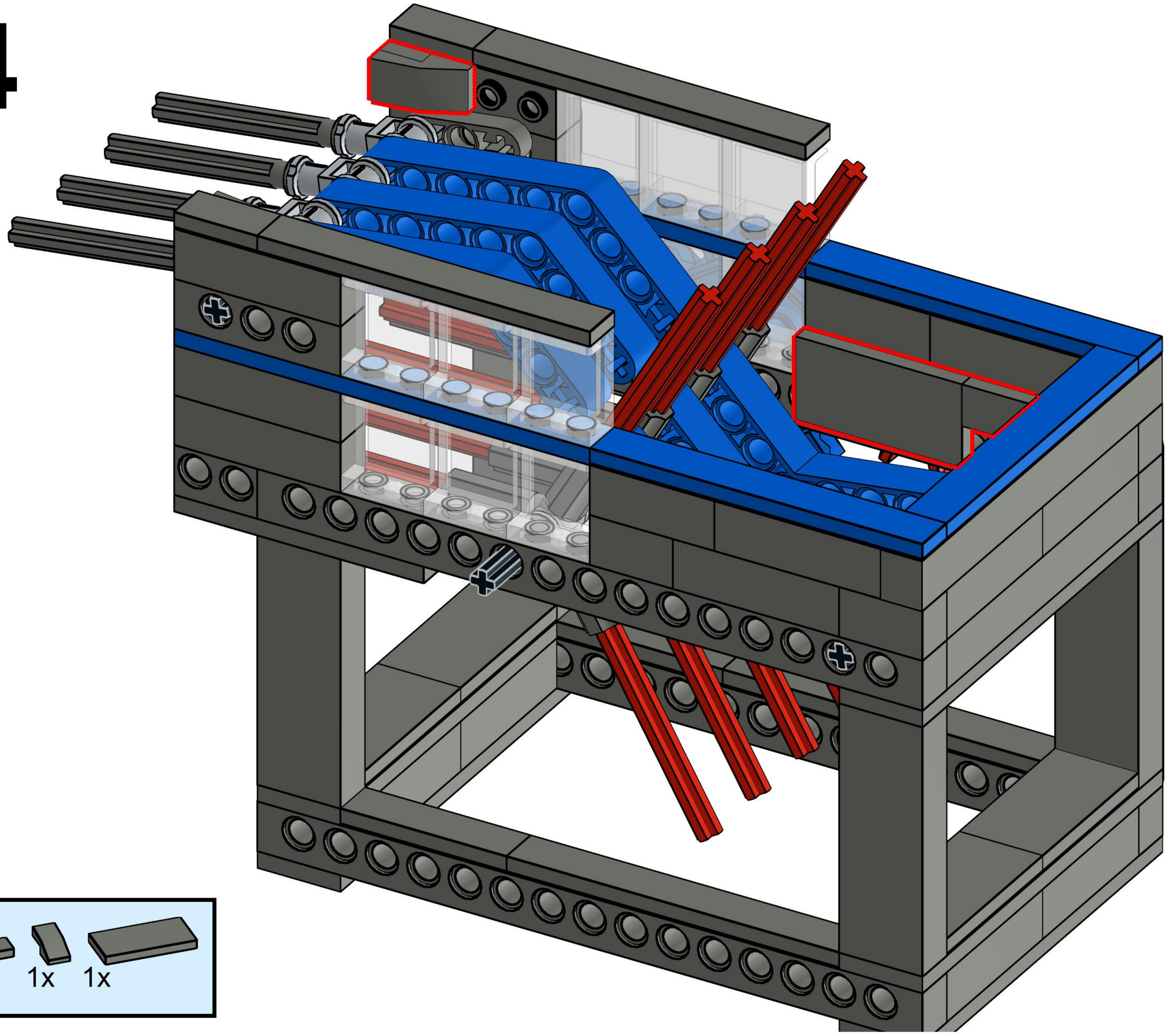

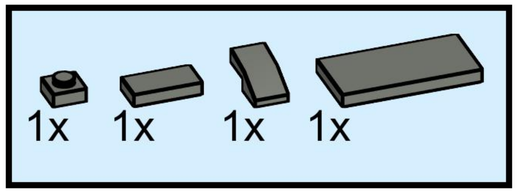

35

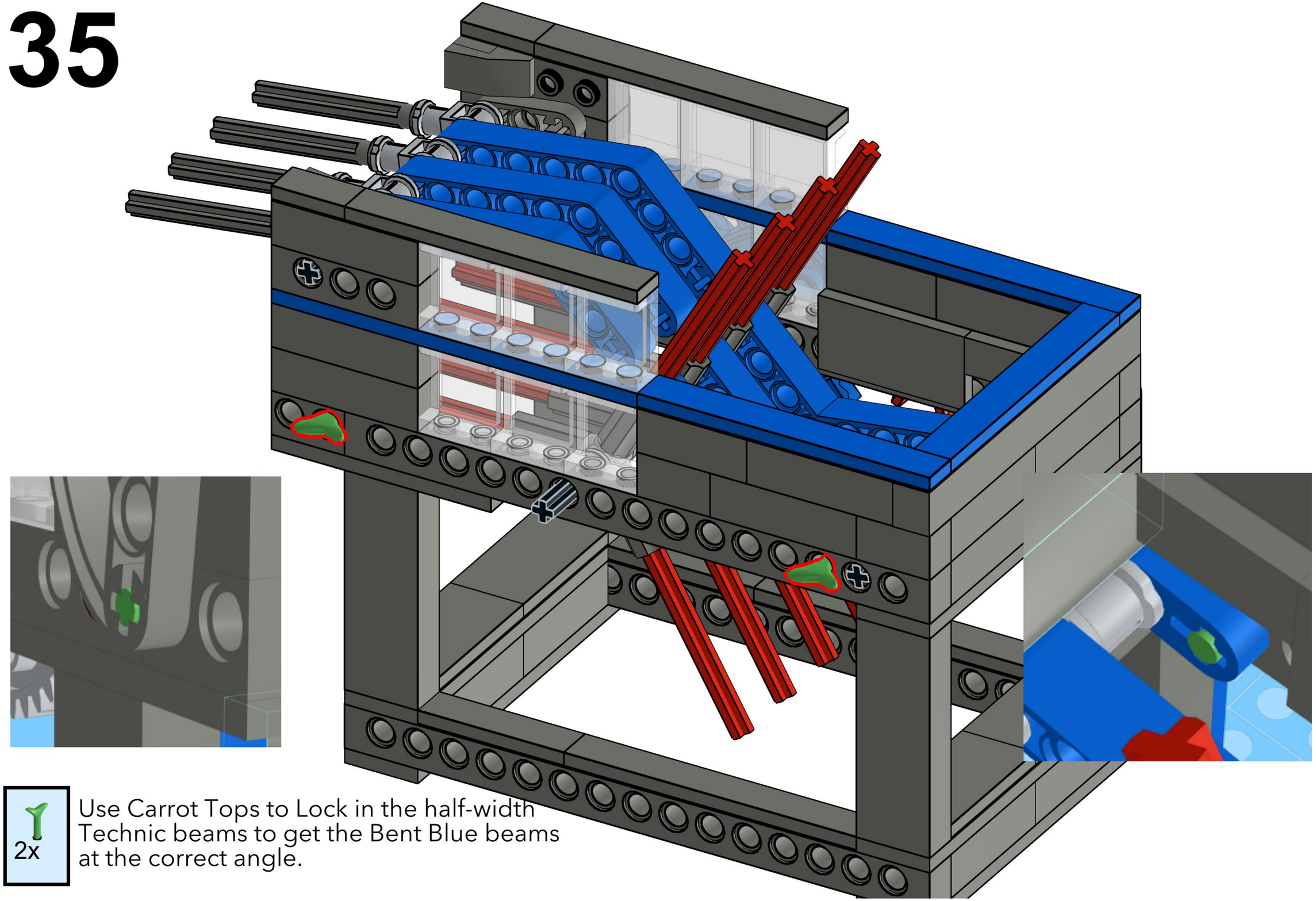

2x

Use Carrot Tops to Lock in the half-width Technic beams to get the Bent Blue beams at the correct angle.

36

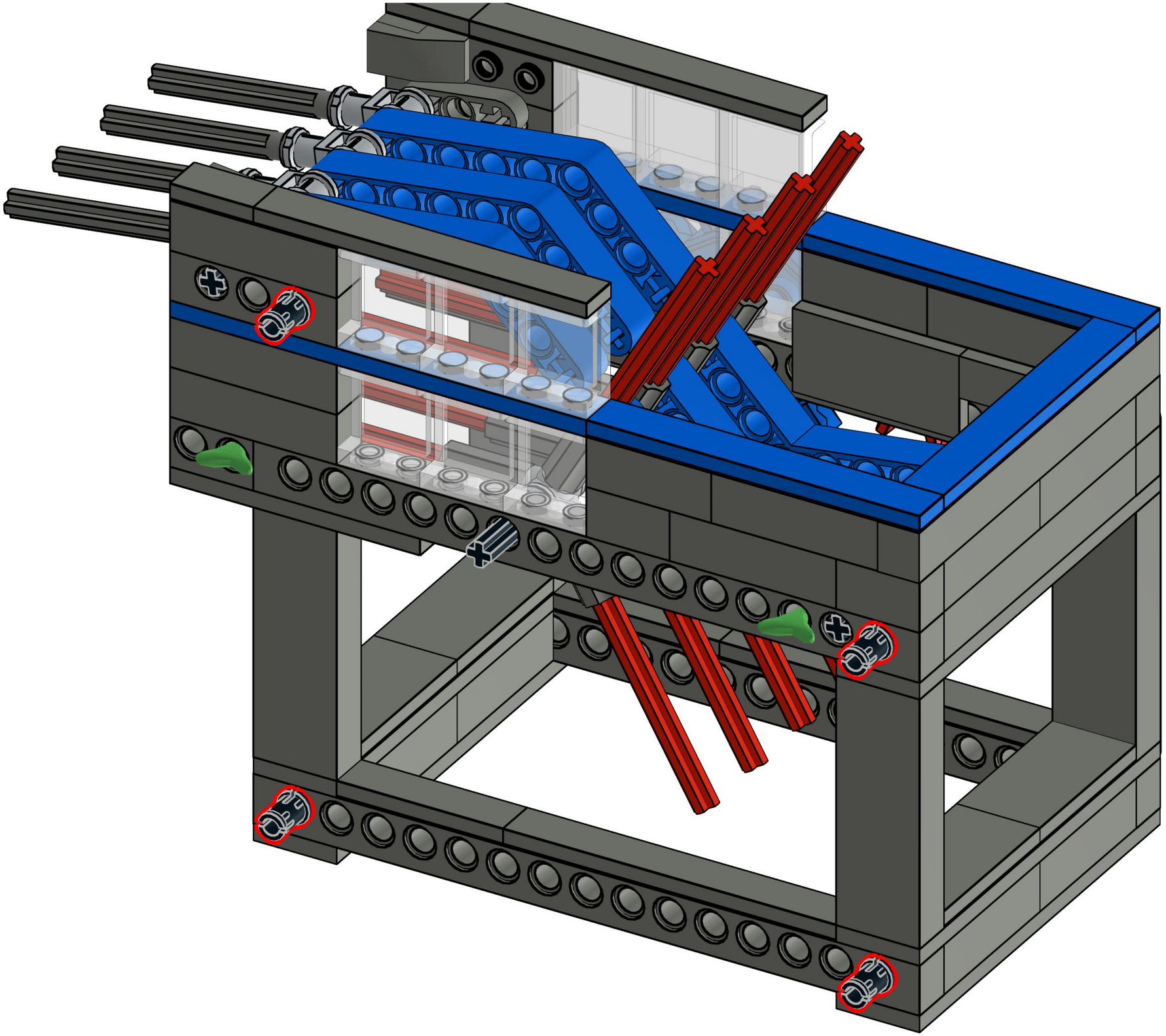

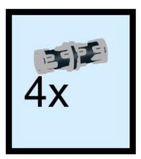

37

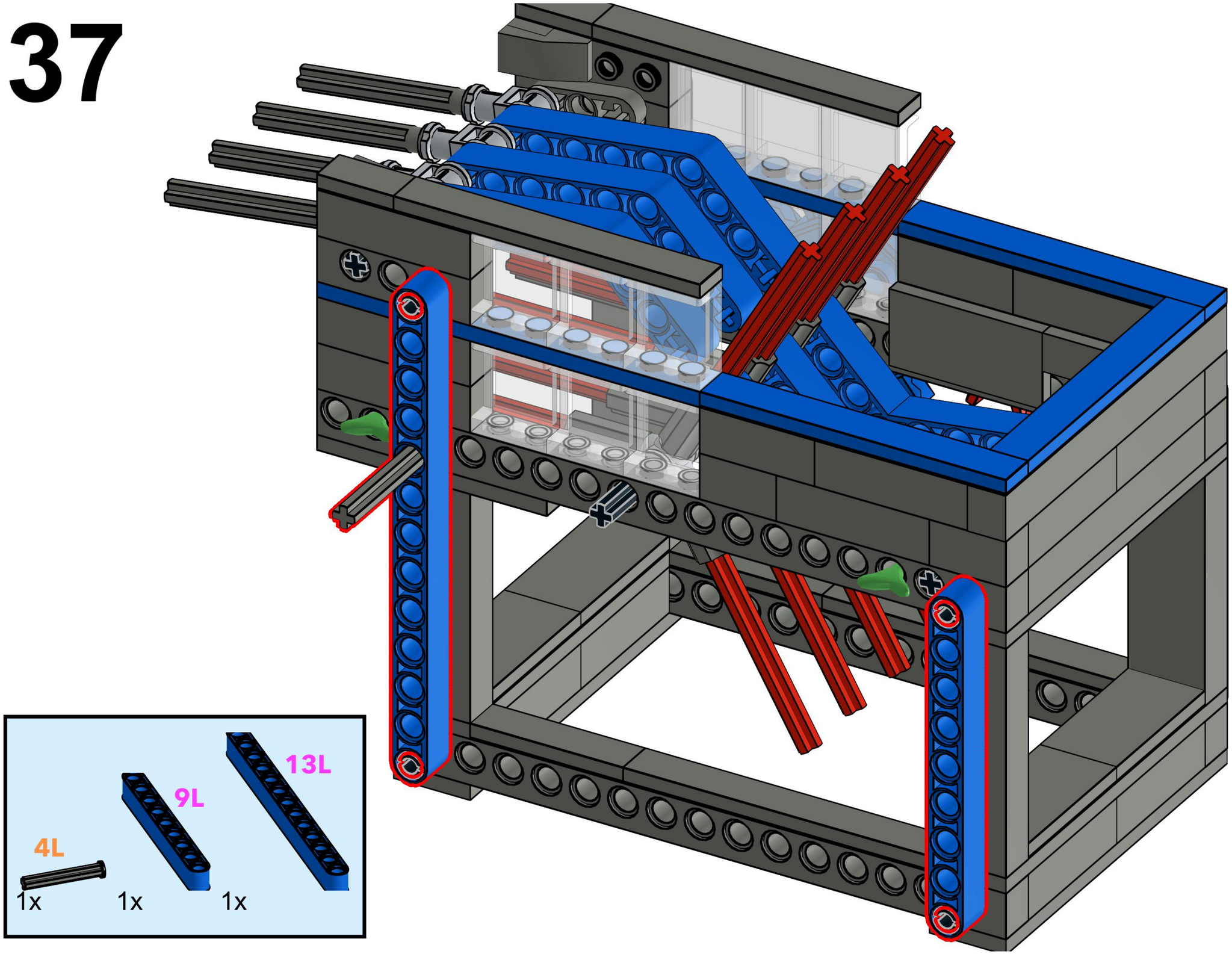

38

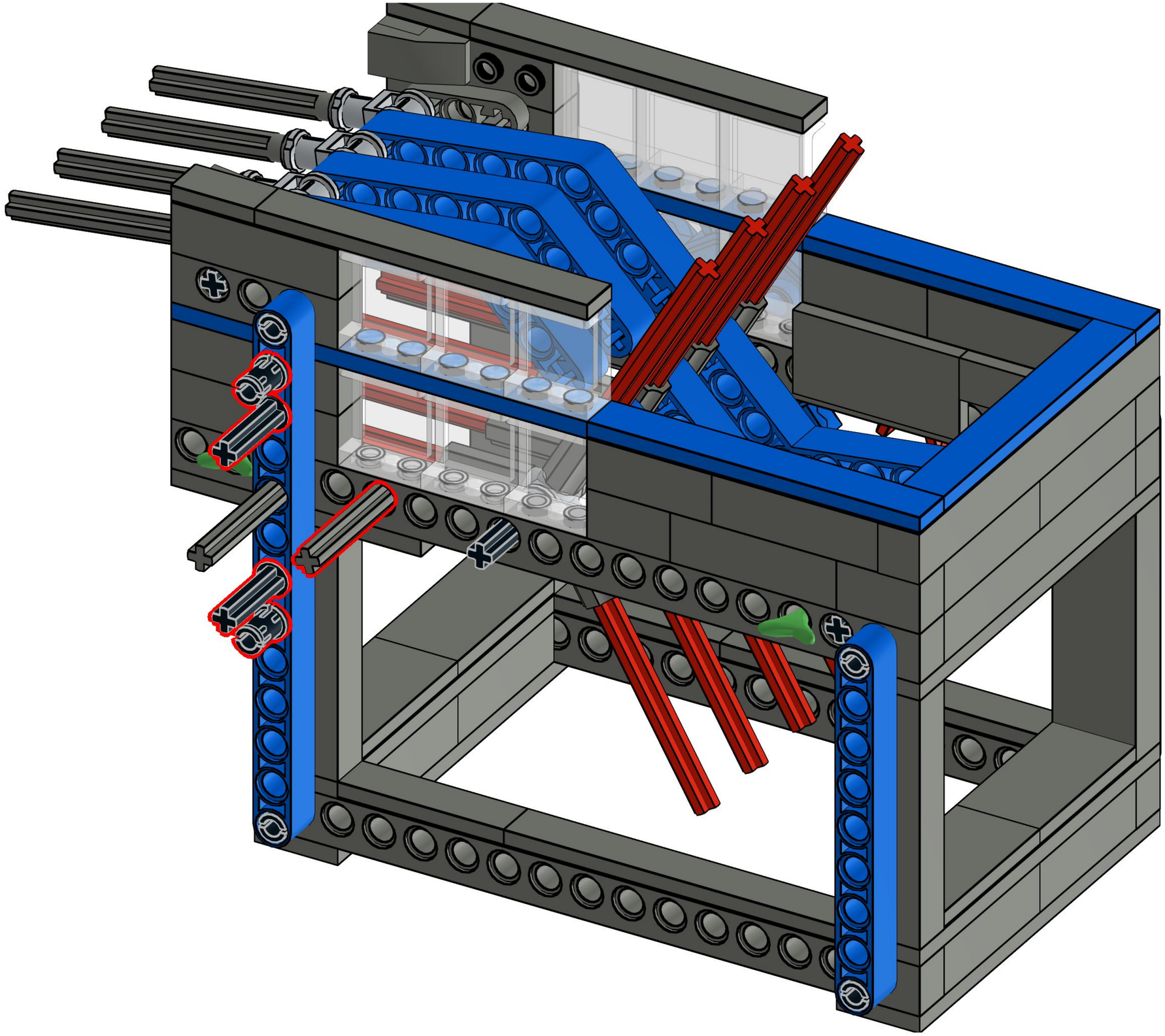

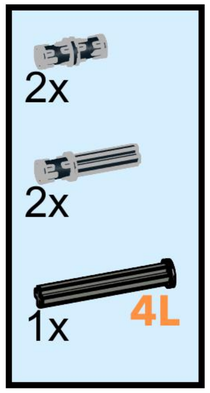

39

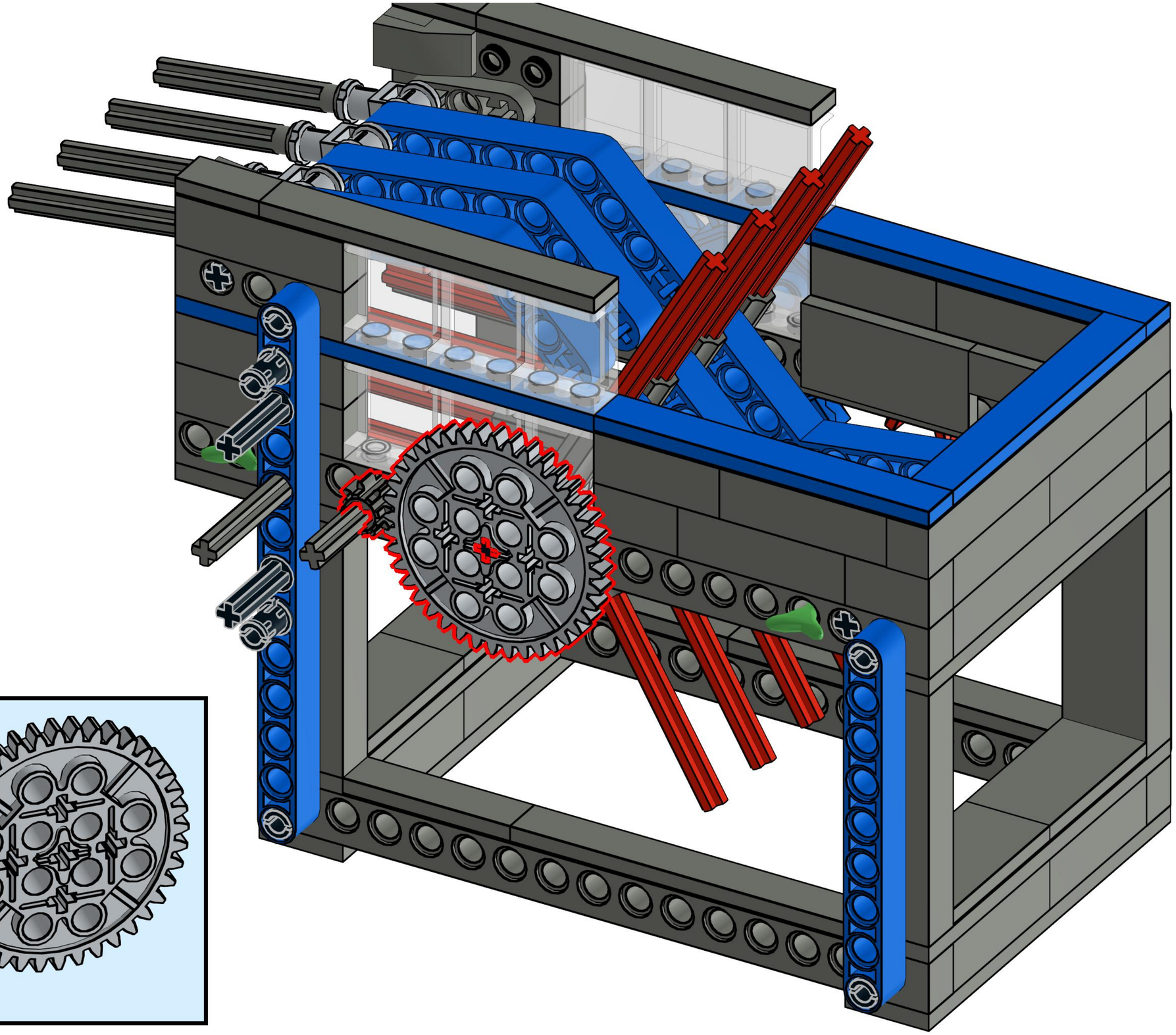

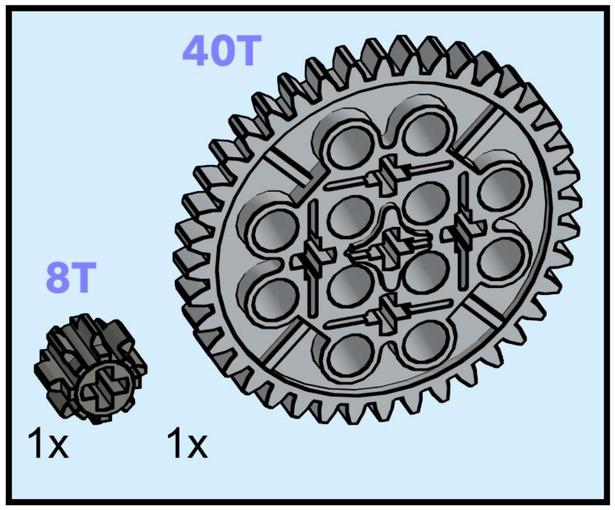

40

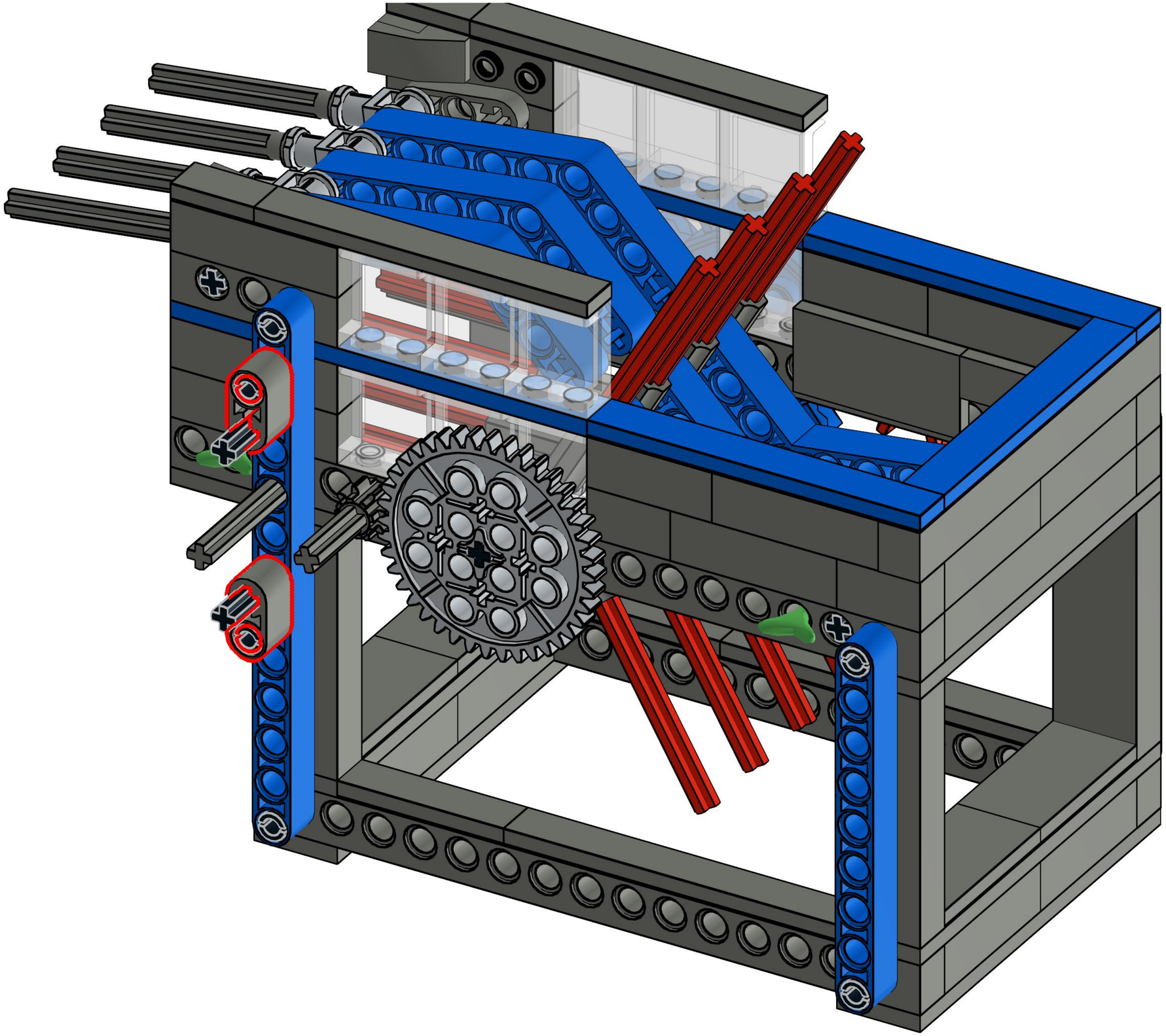

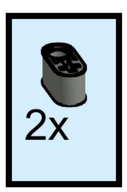

41

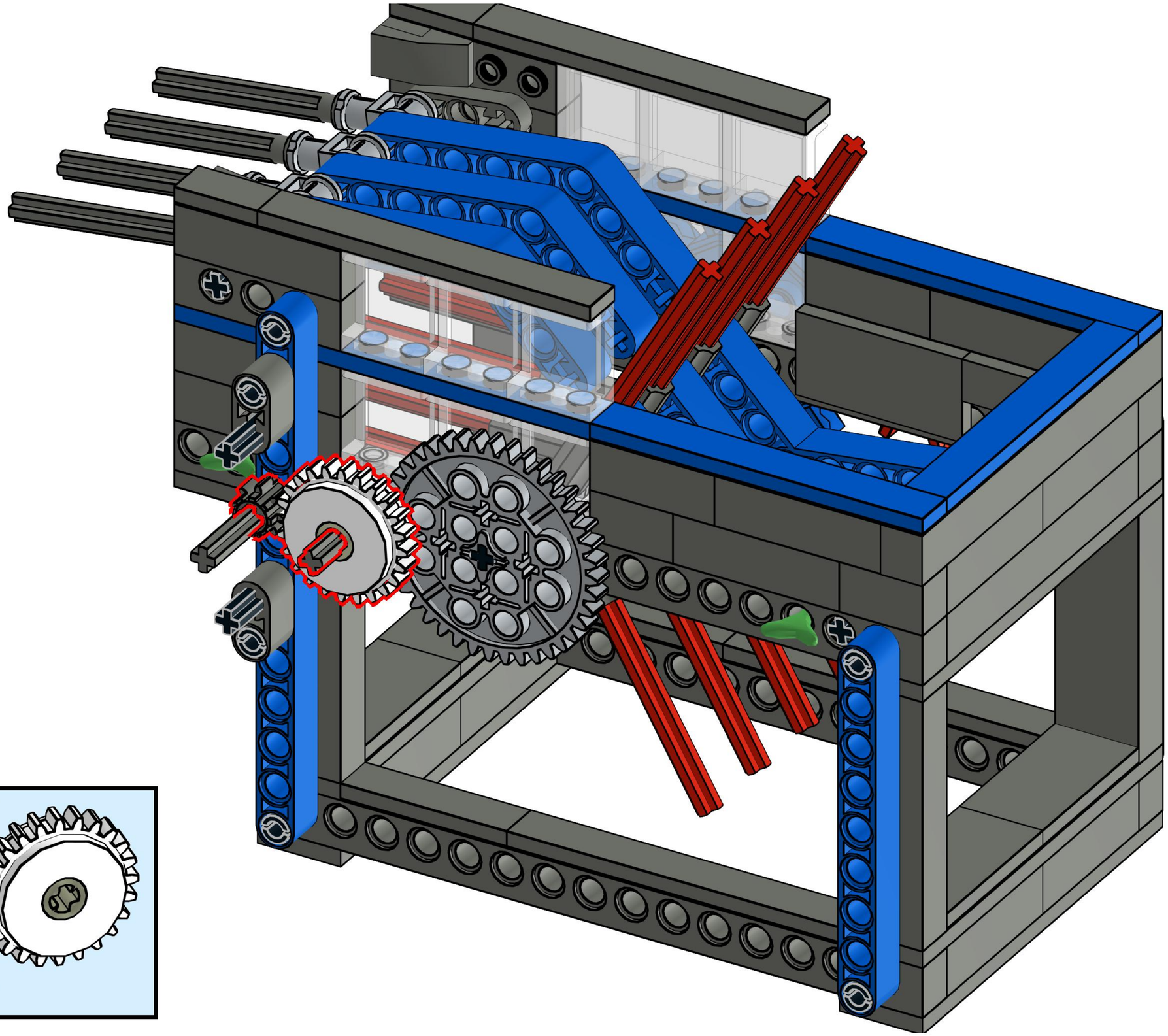

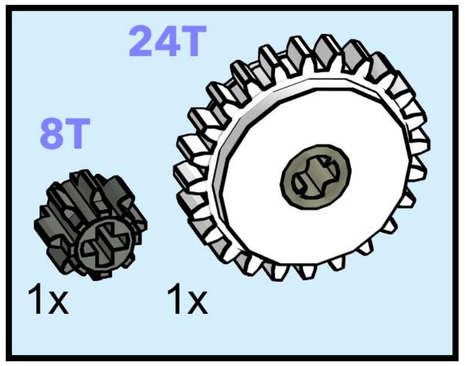

42

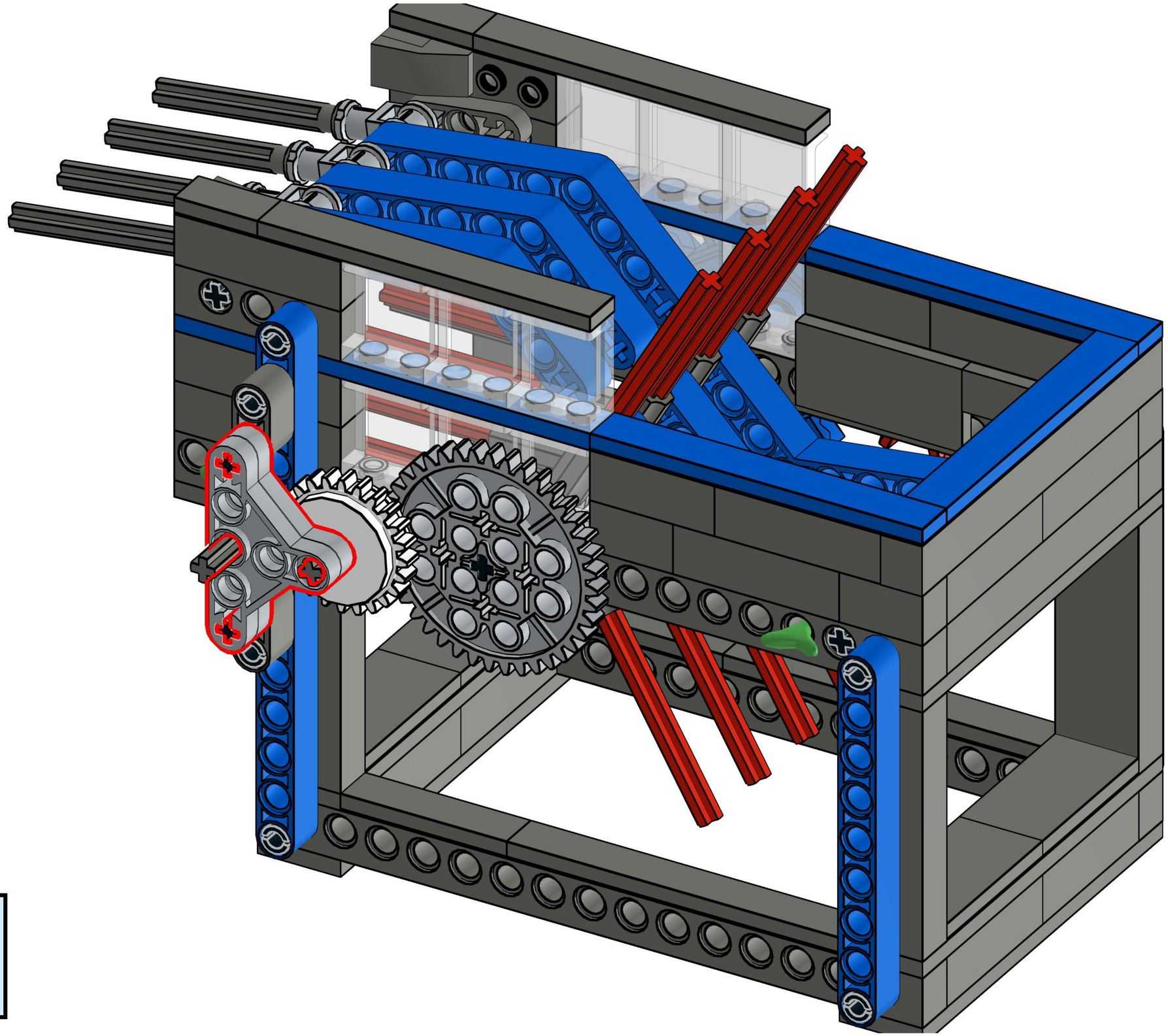

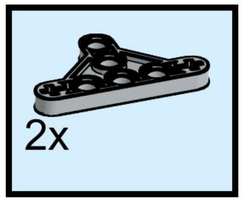

43

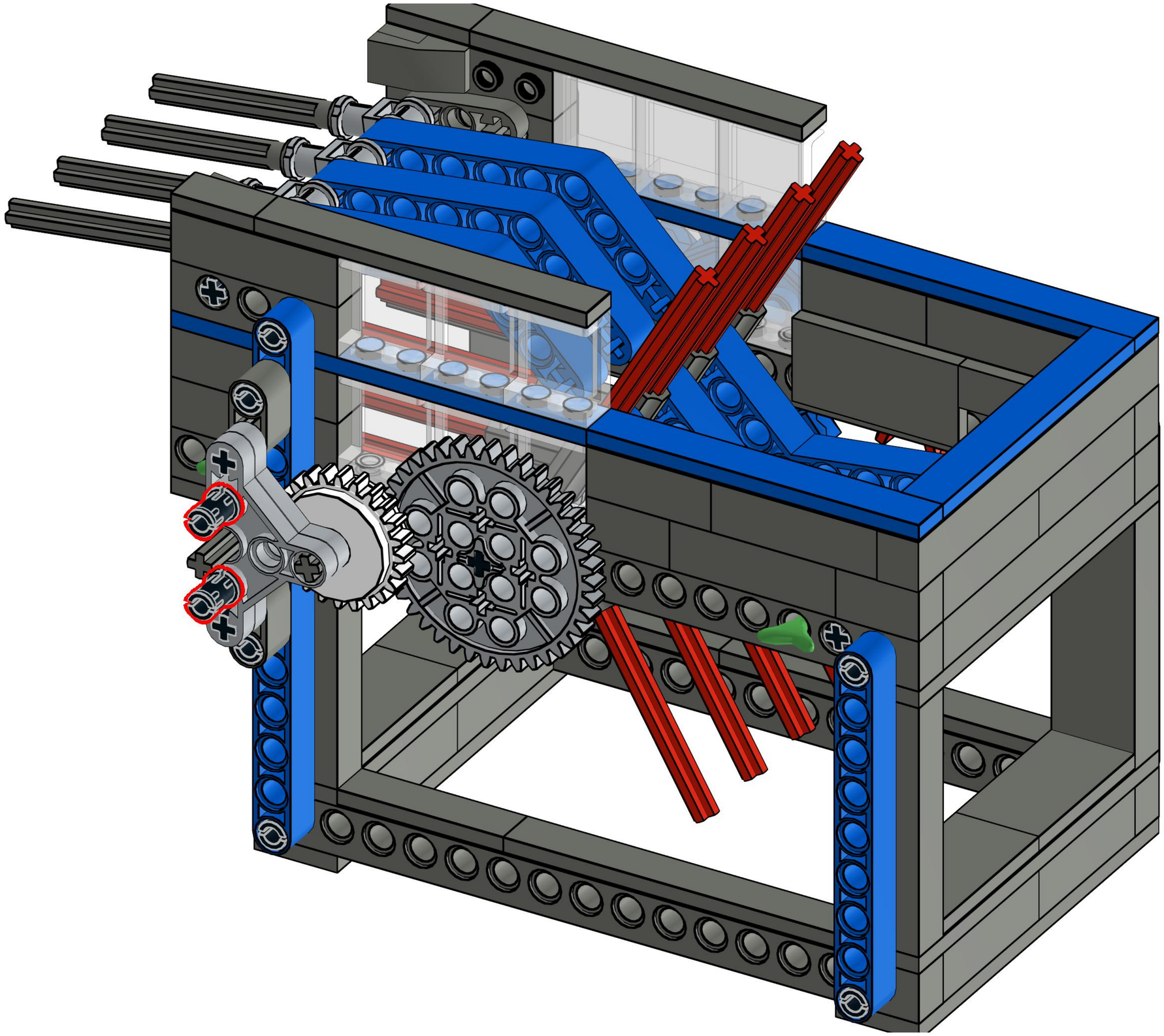

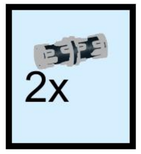

44

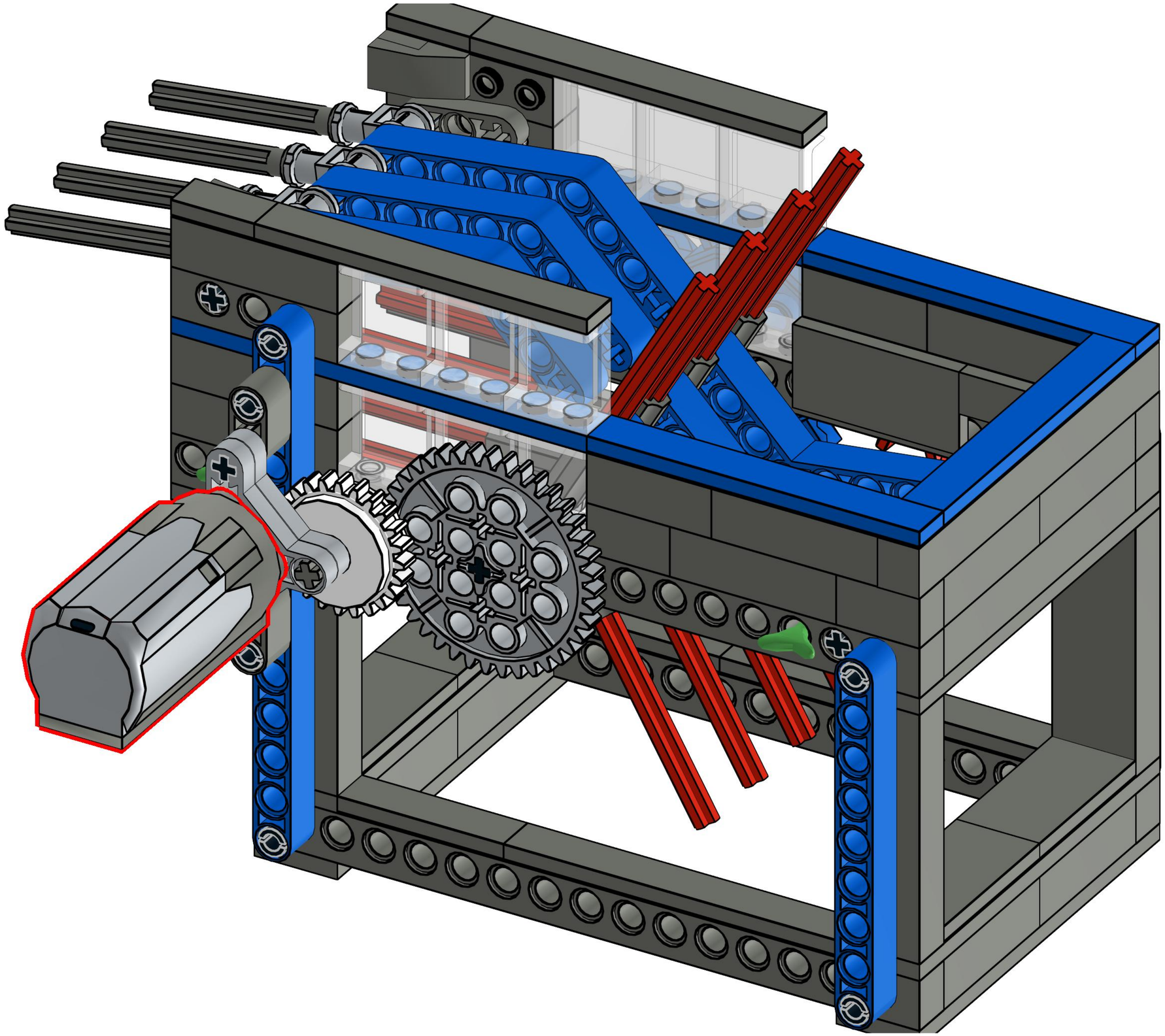

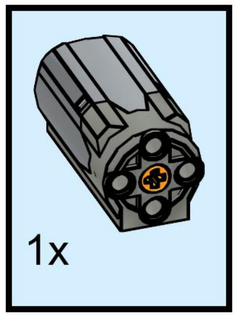

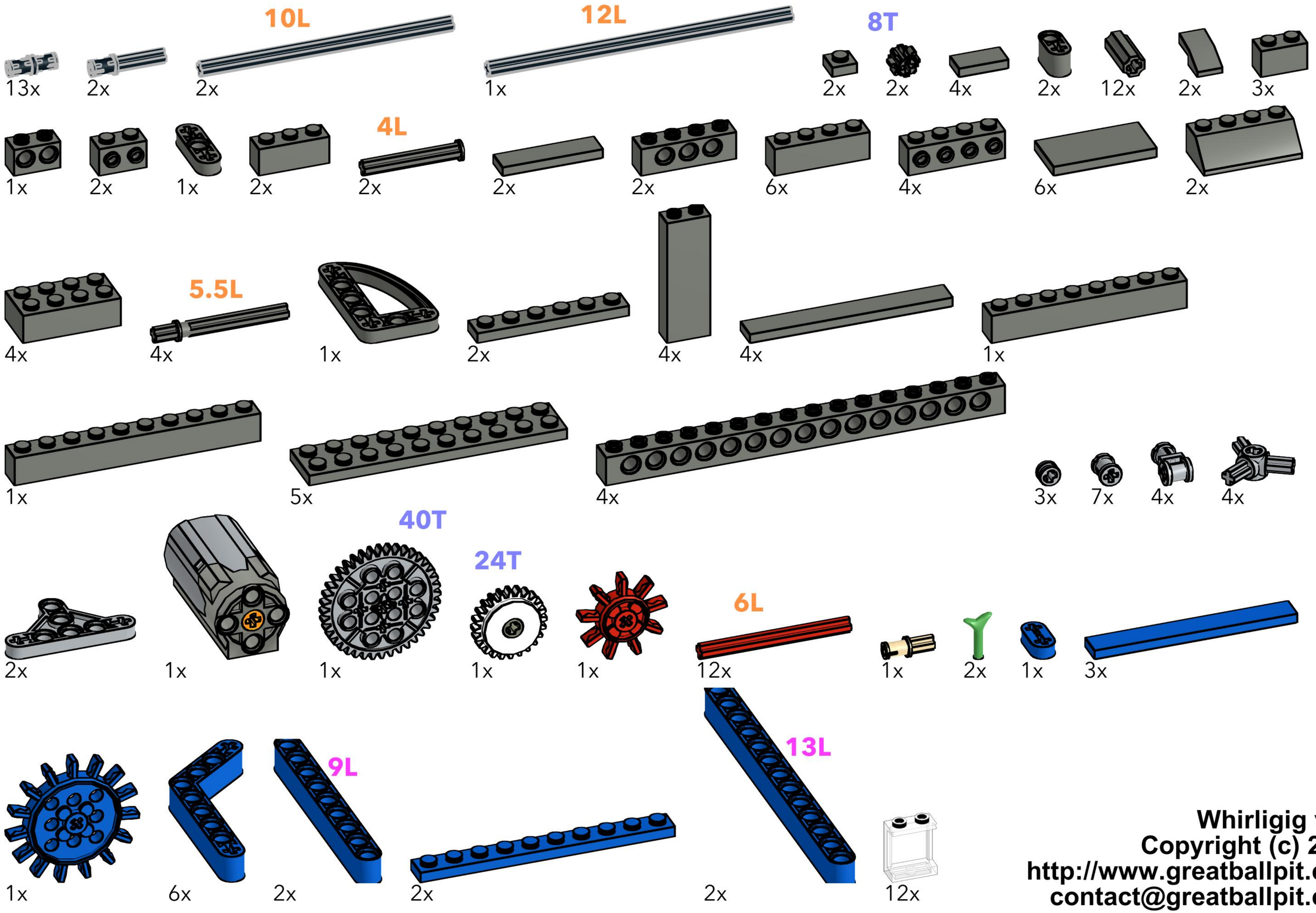

Whirligig v1.4
Copyright (c) 2019
http://www.greatballpit.com
contact@greatballpit.com

LEGO is a registered trademark of the LEGO Group, which does not sponsor, endorse, or authorize these instructions or the model they depict.