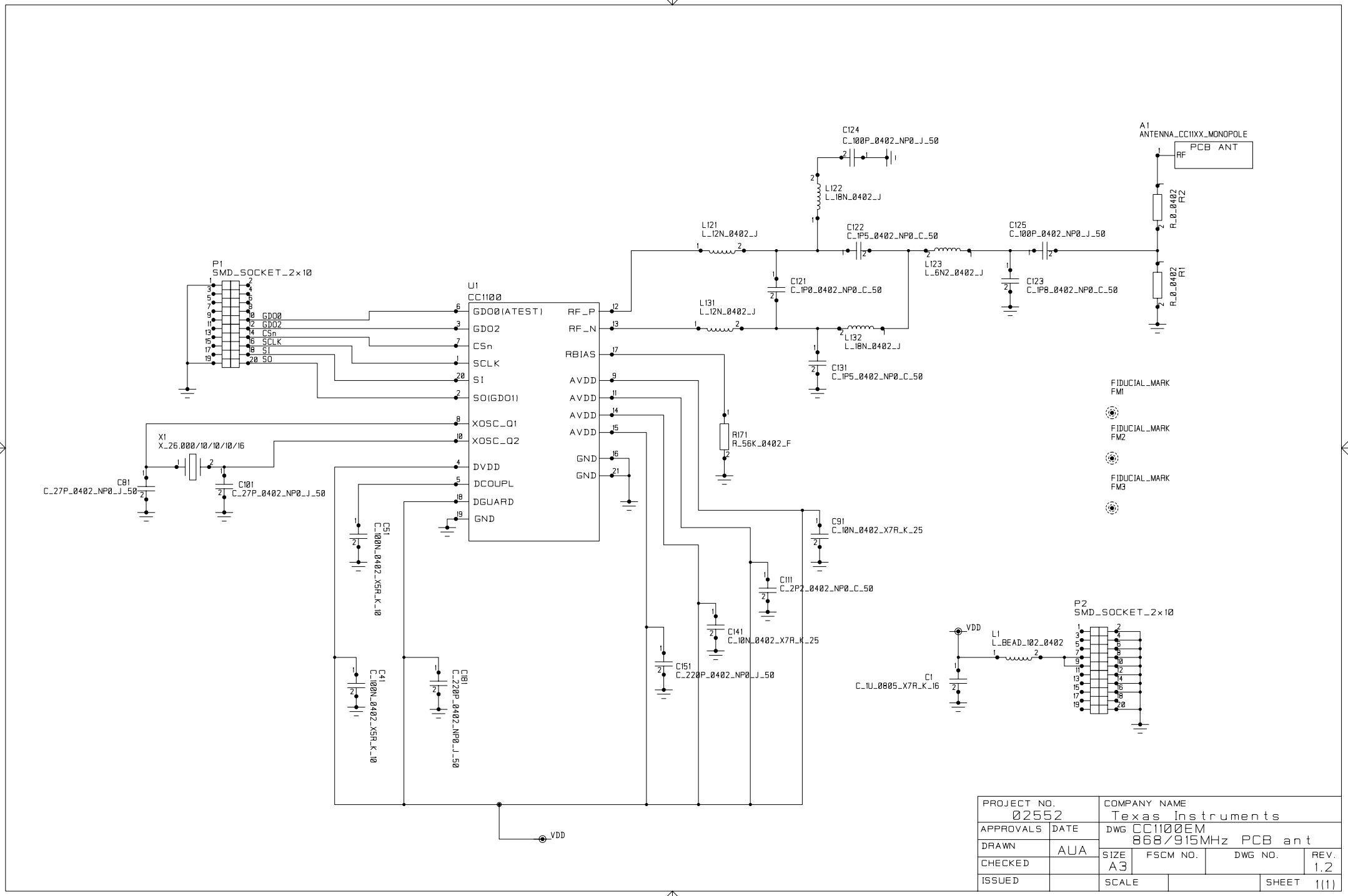

PROJECT NO.		COMPANY NAME			
02552		Texas Instruments			
APPROVALS	DATE	DWG CC1100EM 868/915MHz PCB ant			
DRAWN	AUA	SIZE	FSCM NO.	DWG NO.	REV.
CHECKED		A3			1.2
ISSUED		SCALE			SHEET 1(1)