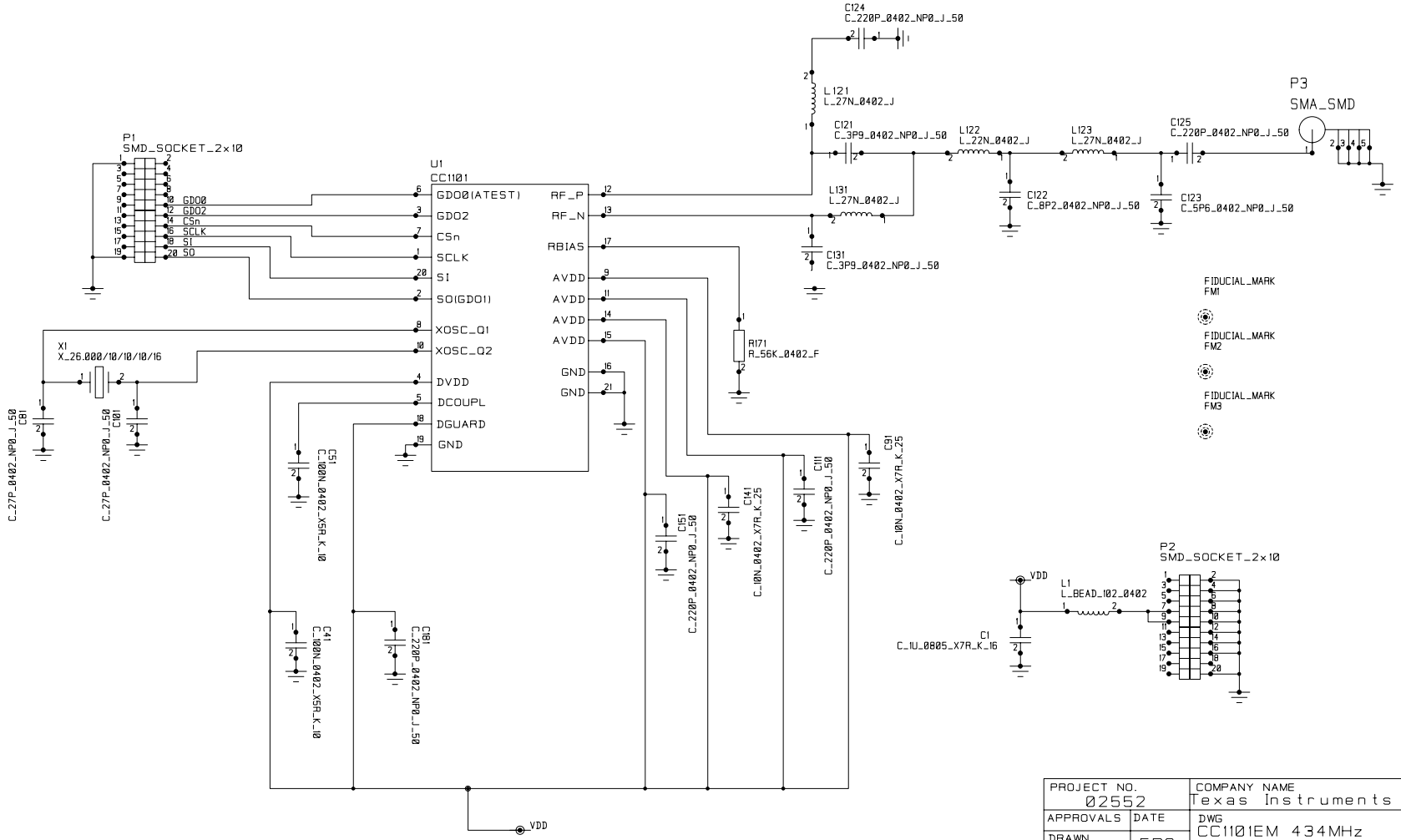

PROJECT NO. 02552		COMPANY NAME Texas Instruments Norway	
APPROVALS	DATE	DWG CC1101EM 434MHz	
DRAWN	FRS	SIZE A3 / FSCM NO. / DWG NO.	REV. 1.0
CHECKED			
ISSUED		SCALE	SHEET 1(1)