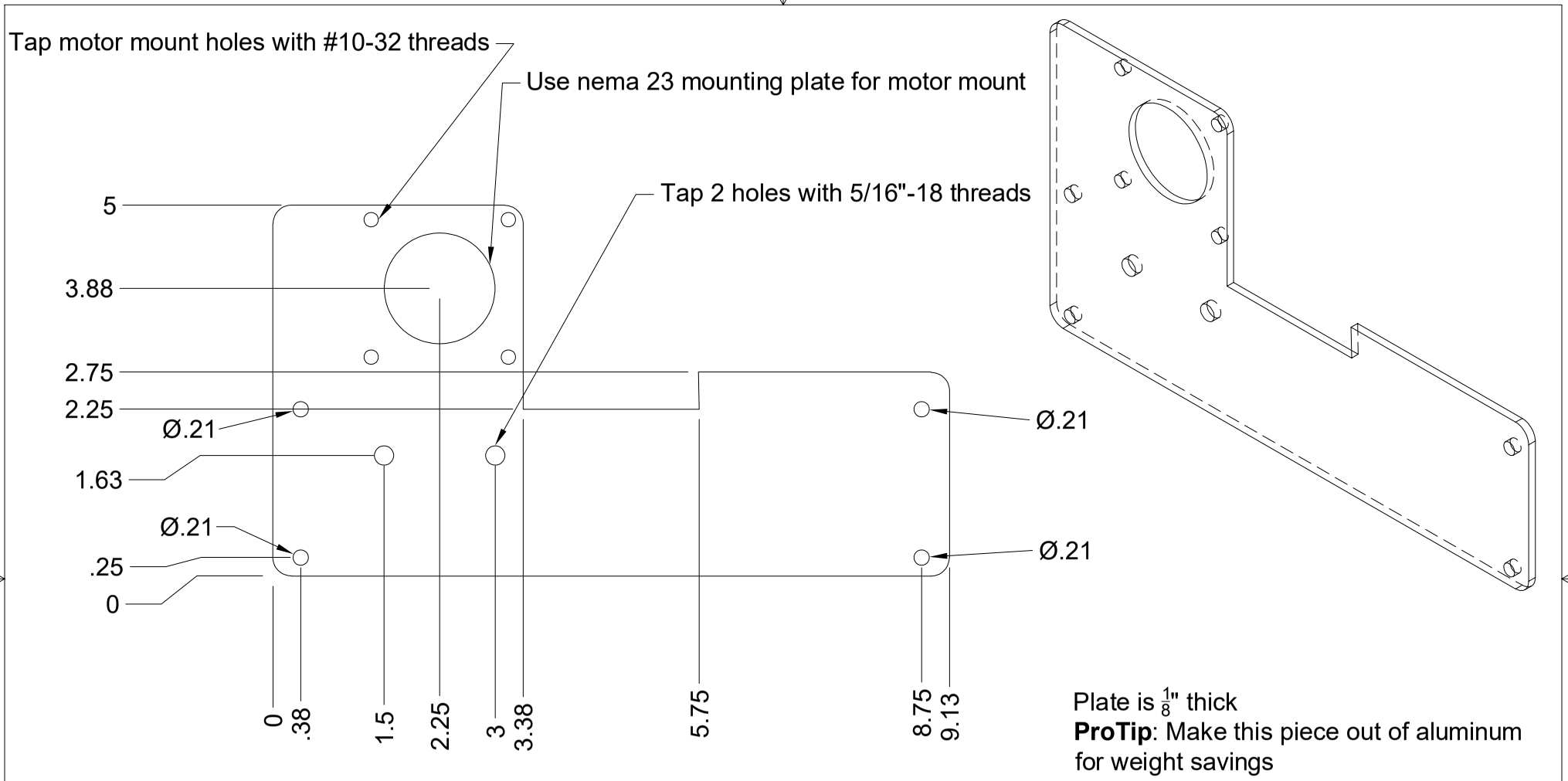

Plate is $\frac{1}{8}$" thick
ProTip: Make this piece out of aluminum for weight savings

	PROJECT Plasma Cutter			
	TITLE Y-Motor Mounting Plate			
APPROVED	SIZE	CODE	DWG NO	REV
CHECKED	A			
DRAWN JD's Garage 3/14/2022	SCALE 1:2	WEIGHT	SHEET 1/1	