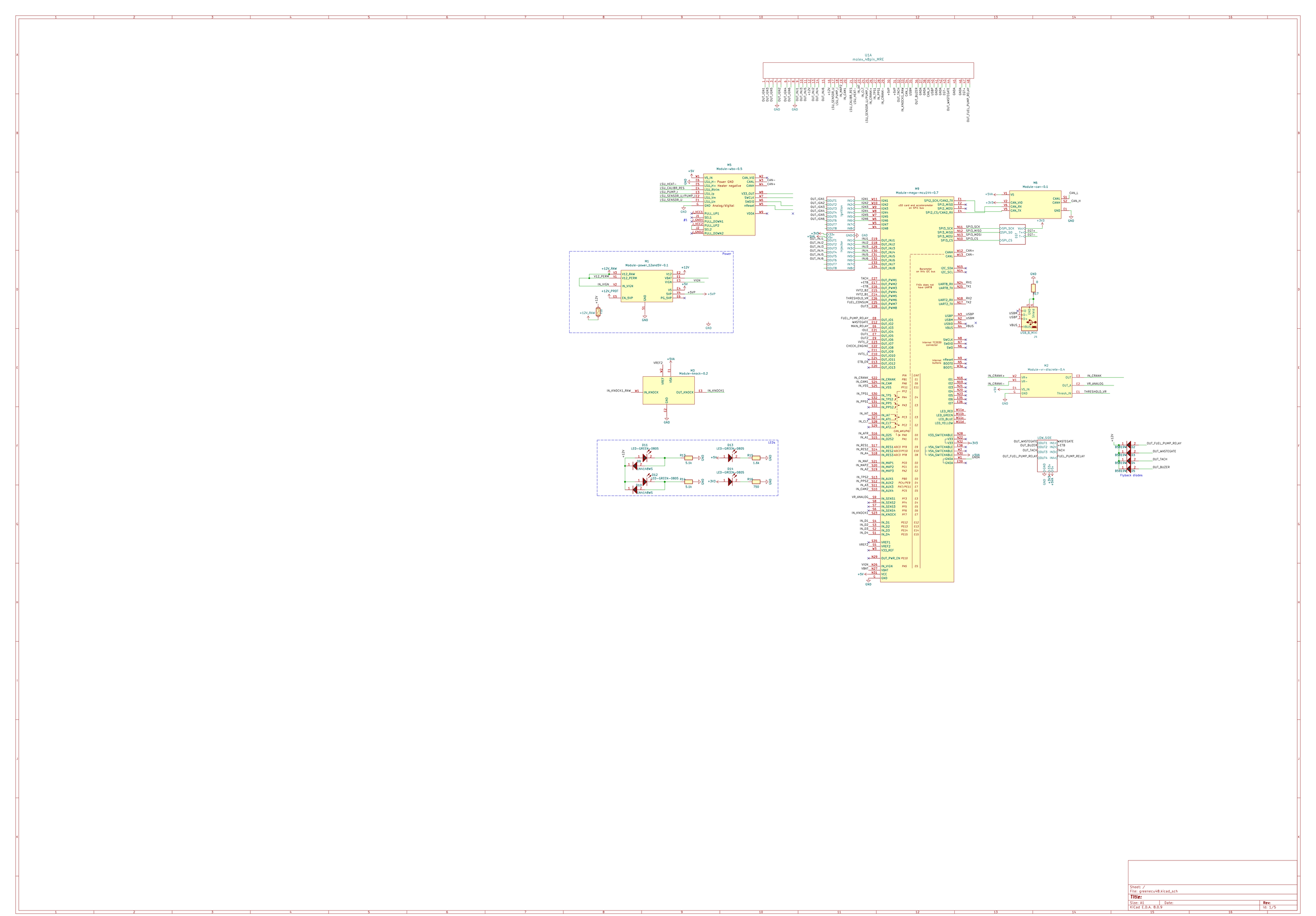

Sheet: /	
File: greenecu48.kicad_sch	
Title:	
Size: A1	Date:
KiCad E.D.A. 8.0.9	Id: 1/5
	Rev:

Remove R20–R22, R26–R28, and install Q7–Q12 for use with dumb coils

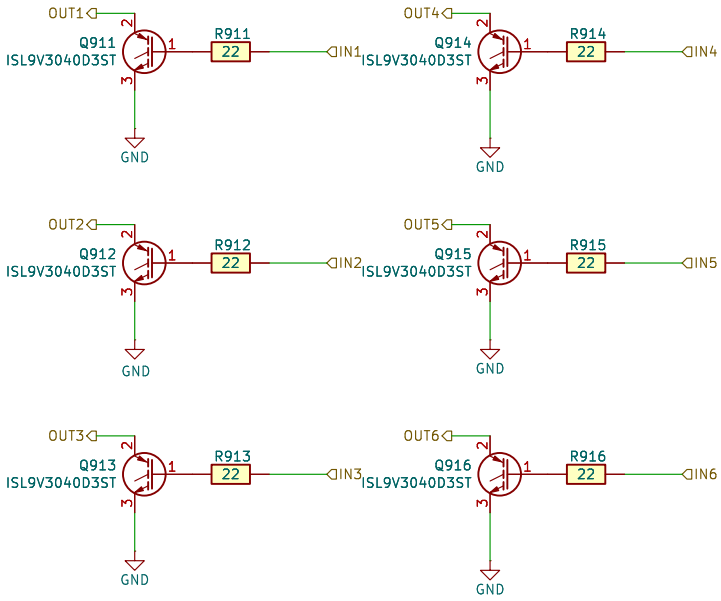

Sheet: /Ignition/
File: IGN6.kicad_sch

Title:

Size: A4	Date:	**Rev:**
KiCad E.D.A. 8.0.9		Id: 2/5

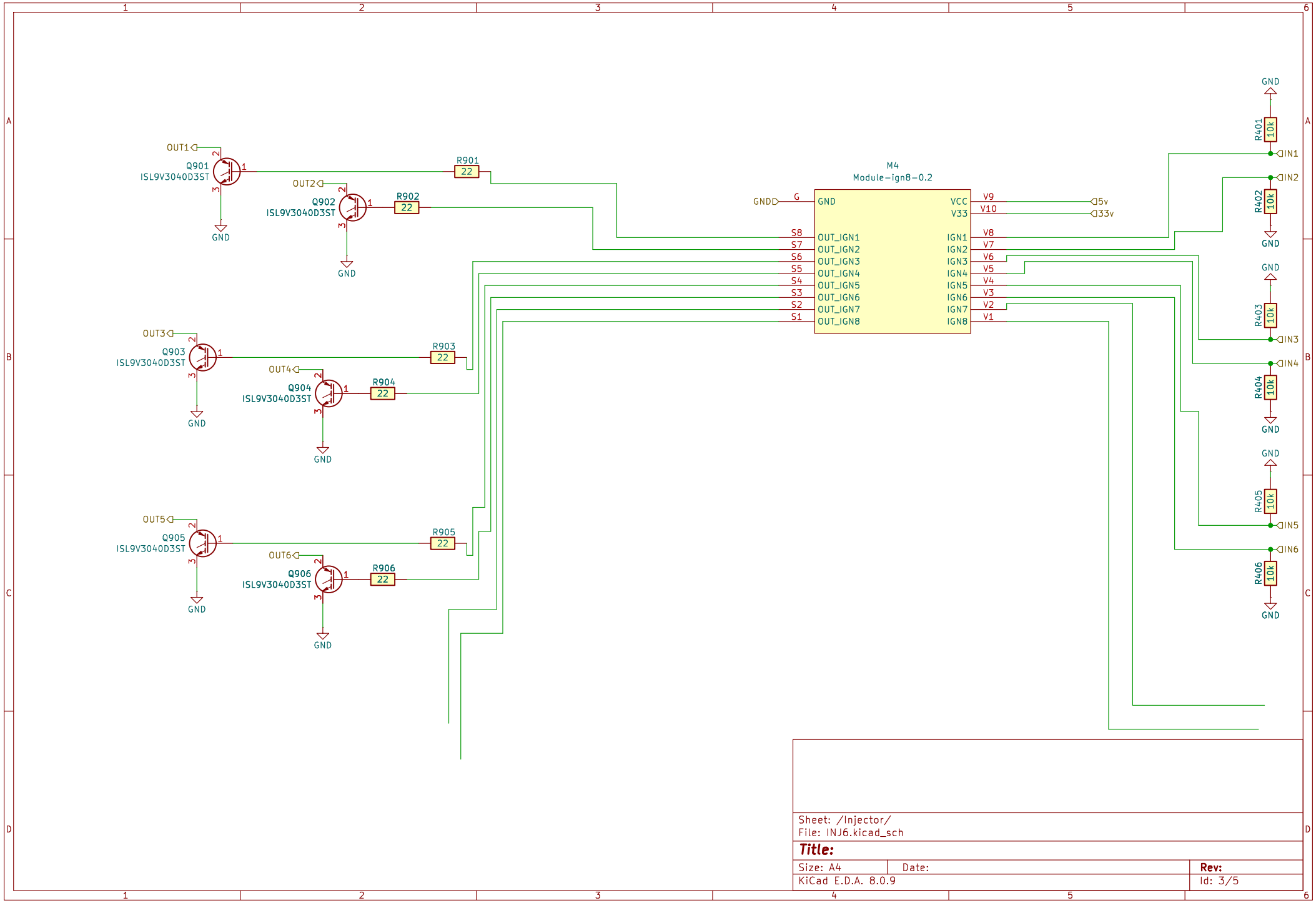

Sheet: /Injector/
File: INJ6.kicad_sch

Title:

Size: A4	Date:	**Rev:**
KiCad E.D.A. 8.0.9		Id: 3/5

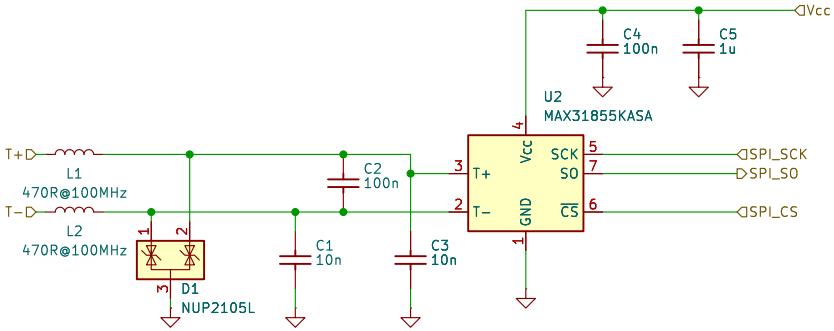

NUP2105L is optional, used for protection

Sheet: /EGT/		
File: egt.kicad_sch		
Title:		
Size: A4	Date:	**Rev:**
KiCad E.D.A. 8.0.9		Id: 4/5

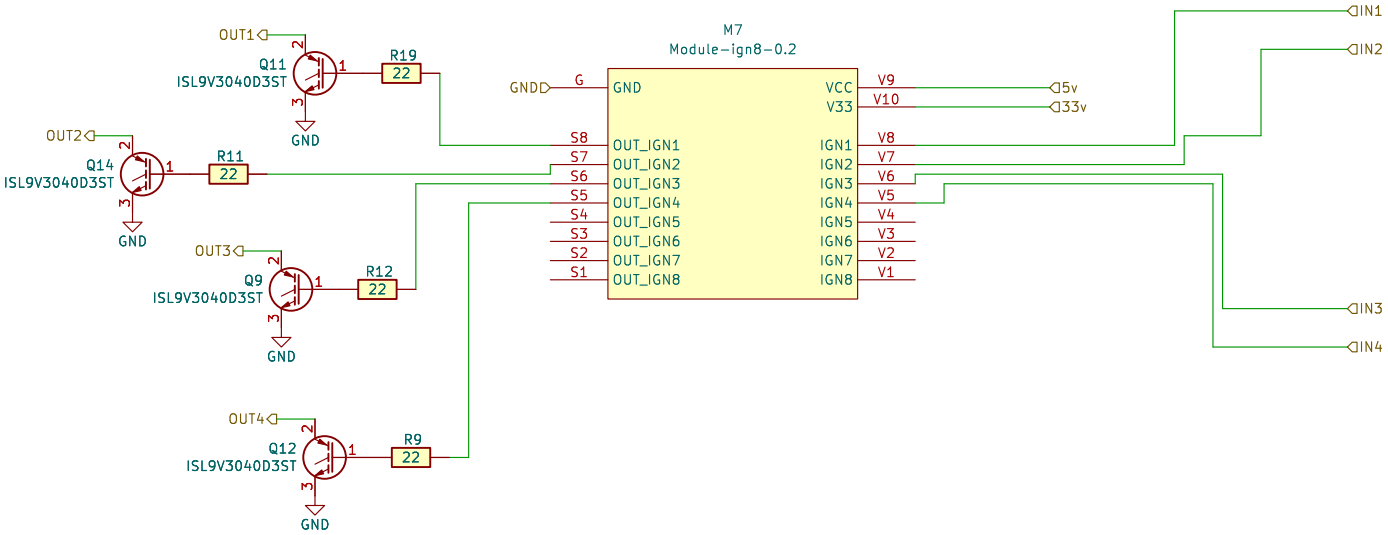

Sheet: /LOW_SIDE/
File: LOW_SIDE.kicad_sch

Title:

Size: A4	Date:	**Rev:**
KiCad E.D.A. 8.0.9		Id: 5/5

M410
V12_RAW V3 V12_RAW V12 E2 V12
V12_PERM V1 V12_PERM VBAT E1 VBAT
VIGN E3 VIGN
IN_VIGN V2 IN_VIGN
V5 E4 V5
5VP V4 5VP
EN E5 EN_5VP GND PG_5PV E6 PG
S1 Hellen One : Power-Module interface

V12_RAW F410 D416 B5819W
D418 SMCJ30A
V12 LED1 R424 10k MHT136UGCT GND
R420 1 C427 4.7u
L420 2.2uH
C421 10u C422 10u C423 10u C424 10u
U420 LMR14020 VIN EN RT SS BOOT SW FB GND GND
C420 100n
D420 SS34
L421 MWSA0503-10uH
R421 10k C428 10n
R422 68k C429 220p
R423 12k
C425 10u C426 10u D421 P6SMB6.8CA
V5 LED3 R426 2.4k MHT136UGCT
R428 4.7k PG
U411 TLS115 IN EN ADJ GND GND OUT PG
C414 1u C415 1u
5VP LED4 R427 2.4k MHT136UGCT
D413 1N4148WS
U410 IN GND EN OUT ADJ / BYP
C413 100n MIC5205-3.3YM5 C410 47u C412 47u VBAT

IN_VIGN D417 B5819W
R411 33k R413 6.8k C411 100n
VBAT *VIGN overvoltage protection*
D414 1N4148WS D410 1N4148WS
VIGN LED2 R425 10k MHT136UGCT
V12_PERM R410 6.8k
D412 1N4148WS
D411 PSM712-LF 12V 7V

Title: ***power_12and5V***			***rusEFI EMS*** ***Hellen-One Platform*** *https://rusefi.com/s/hellen72*
Size: A3	Author:	Revision: 0.1	
Date: 15.02.2023		Sheet 1 of 1	

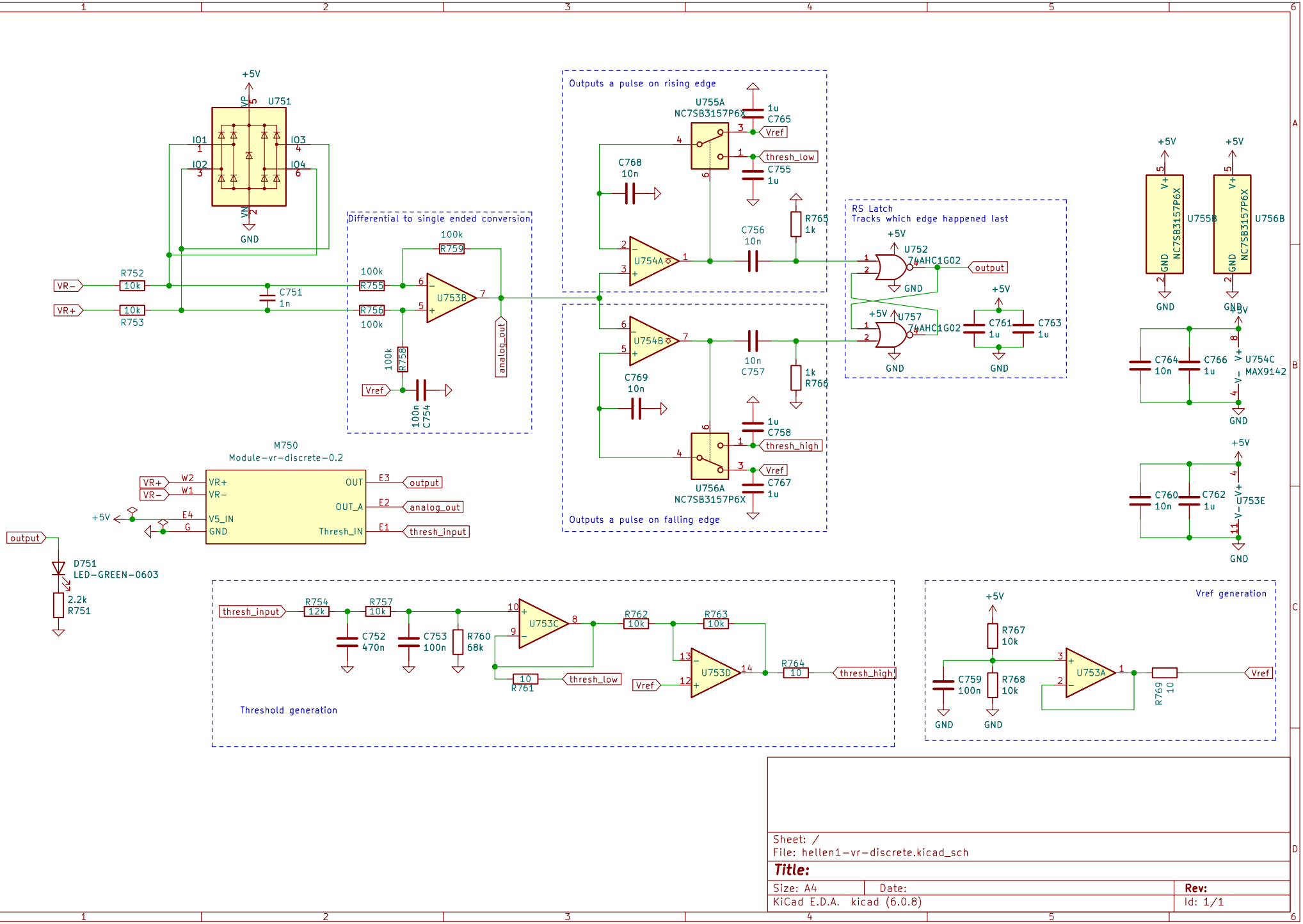
+5V
U751
IO1
IO2
IO3
IO4
VP
VN
GND
VR−
VR+
R752
10k
R753
10k
C751
1n
Differential to single ended conversion
100k
R759
100k
R755
100k
R756
U753B
analog_out
100k
R758
Vref
100n
C754
Outputs a pulse on rising edge
U755A
NC7SB3157P6X
1u
C765
Vref
thresh_low
C755
1u
C768
10n
U754A
C756
10n
R765
1k
RS Latch
Tracks which edge happened last
U752
74AHC1G02
output
U757
74AHC1G02
C761
1u
C763
1u
U754B
C769
10n
10n
C757
1k
R766
1u
C758
thresh_high
Vref
C767
1u
U756A
NC7SB3157P6X
Outputs a pulse on falling edge
U755B
U756B
C764
10n
C766
1u
U754C
MAX9142
C760
10n
C762
1u
U753E
M750
Module−vr−discrete−0.2
VR+
VR−
W2
W1
VR+
VR−
V5_IN
GND
OUT
OUT_A
Thresh_IN
E3
E2
E1
E4
G
output
analog_out
thresh_input
output
D751
LED−GREEN−0603
2.2k
R751
thresh_input
R754
12k
R757
10k
C752
470n
C753
100n
R760
68k
U753C
R762
10k
R763
10k
U753D
R764
10
thresh_high
10
R761
thresh_low
Vref
Threshold generation
Vref generation
R767
10k
C759
100n
R768
10k
U753A
R769
10
Vref
Sheet: /
File: hellen1−vr−discrete.kicad_sch
Title:
Size: A4
Date:
Rev:
KiCad E.D.A. kicad (6.0.8)
Id: 1/1

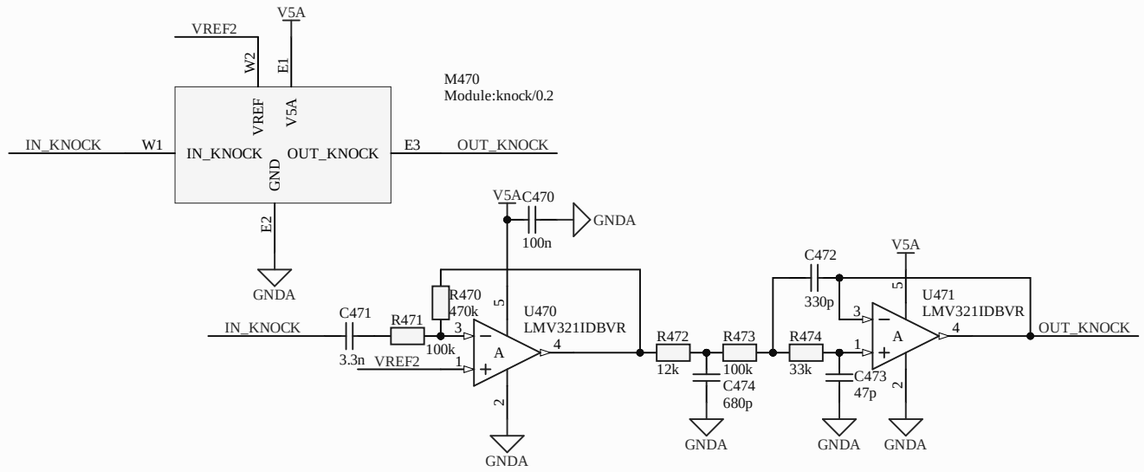

Title: ***Hellen-One Knock***			***rusEFI EMS*** ***Hellen-One Platform*** *https://rusefi.com/s/hellen72*
Size: A3	Author: andreika	Revision: 0.2	
Date: 15.02.2023		Sheet 1 of 1	

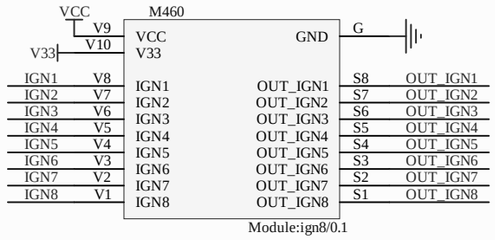

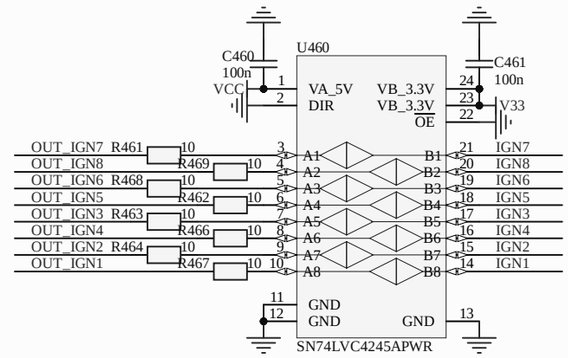

Title: ***Hellen-One IGN8***			***rusEFI EMS*** ***Hellen-One Platform*** *https://rusefi.com/s/hellen1/*
Size: A3	Author: andreika	Revision: 0.2	
Date: 18/03/2022		Sheet 1 of 1	

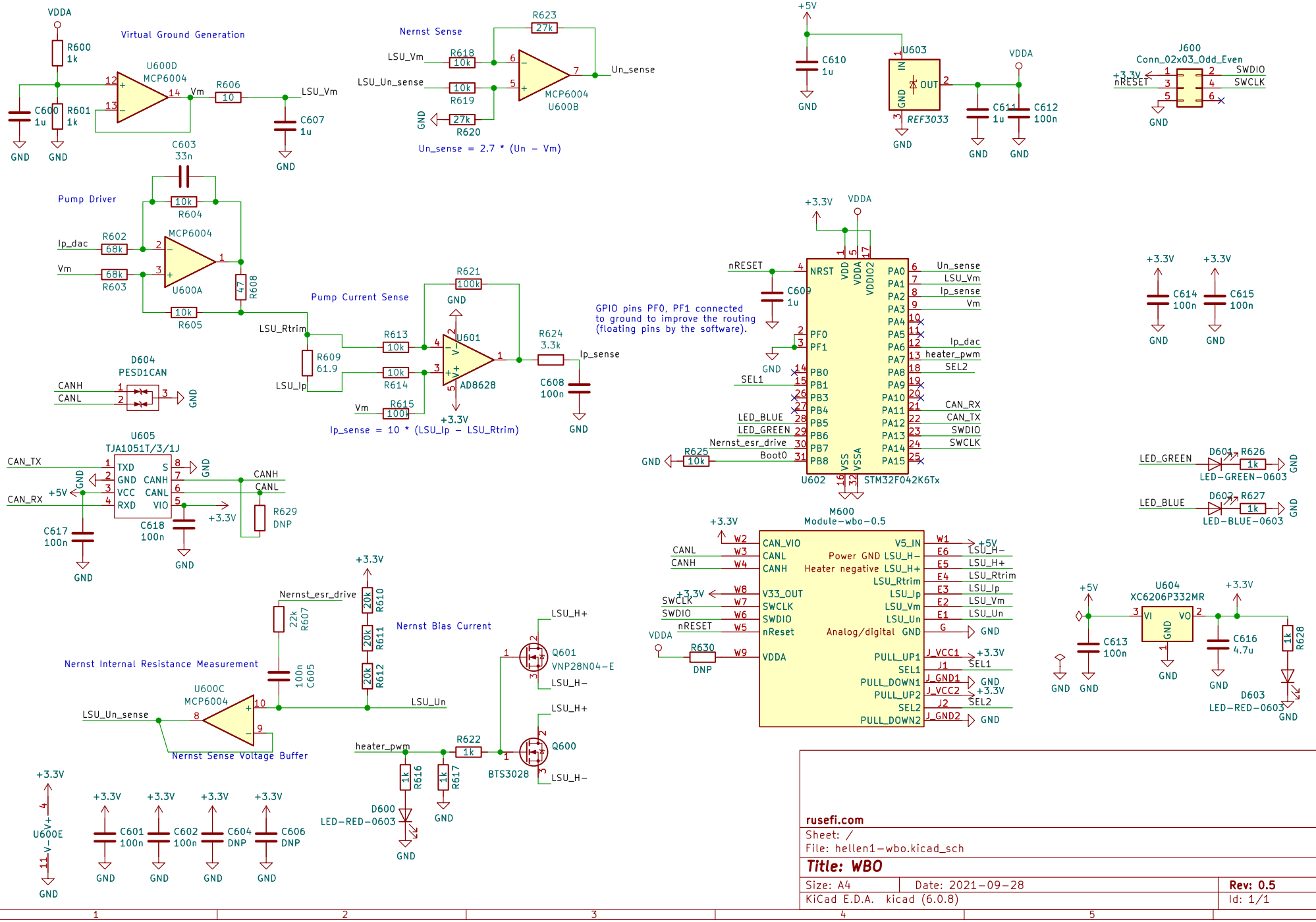
Virtual Ground Generation
U600D
MCP6004
R600 1k
R601 1k
C600 1u
C607 1u
R606 10
Vm
LSU_Vm
Nernst Sense
R623 27k
R618 10k
R619 10k
R620 27k
LSU_Vm
LSU_Un_sense
Un_sense
U600B
Un_sense = 2.7 * (Un − Vm)
+5V
C610 1u
U603
REF3033
C611 1u
C612 100n
VDDA
J600
Conn_02x03_Odd_Even
SWDIO
SWCLK
nRESET
Pump Driver
C603 33n
R604 10k
R605 10k
R602 68k
R603 68k
R608 47
Ip_dac
Vm
U600A
Pump Current Sense
R621 100k
R613 10k
R614 10k
R615 100
R609 61.9
R624 3.3k
C608 100n
U601
AD8628
LSU_Rtrim
LSU_Ip
Ip_sense
Ip_sense = 10 * (LSU_Ip − LSU_Rtrim)
D604
PESD1CAN
CANH
CANL
GPIO pins PF0, PF1 connected
to ground to improve the routing
(floating pins by the software).
nRESET
C609 1u
SEL1
LED_BLUE
LED_GREEN
Nernst_esr_drive
R625 10k
Boot0
U602
STM32F042K6Tx
C614 100n
C615 100n
U605
TJA1051T/3/1J
CAN_TX
CAN_RX
C617 100n
C618 100n
R629 DNP
LED_GREEN
LED_BLUE
D601
D602
R626 1k
R627 1k
LED−GREEN−0603
LED−BLUE−0603
M600
Module−wbo−0.5
Power GND LSU_H−
Heater negative LSU_H+
Analog/digital GND
R630 DNP
U604
XC6206P332MR
C613 100n
C616 4.7u
R628 1k
D603
LED−RED−0603
Nernst Internal Resistance Measurement
Nernst Bias Current
R607 22k
R610 20k
R611 20k
R612 20k
C605 100n
U600C
MCP6004
LSU_Un_sense
Nernst Sense Voltage Buffer
LSU_Un
Q601
VNP28N04−E
Q600
BTS3028
heater_pwm
R622 1k
R616 1k
R617 1k
D600
LED−RED−0603
U600E
C601 100n
C602 100n
C604 DNP
C606 DNP
rusefi.com
Sheet: /
File: hellen1−wbo.kicad_sch
Title: WBO
Size: A4
Date: 2021−09−28
Rev: 0.5
KiCad E.D.A. kicad (6.0.8)
Id: 1/1

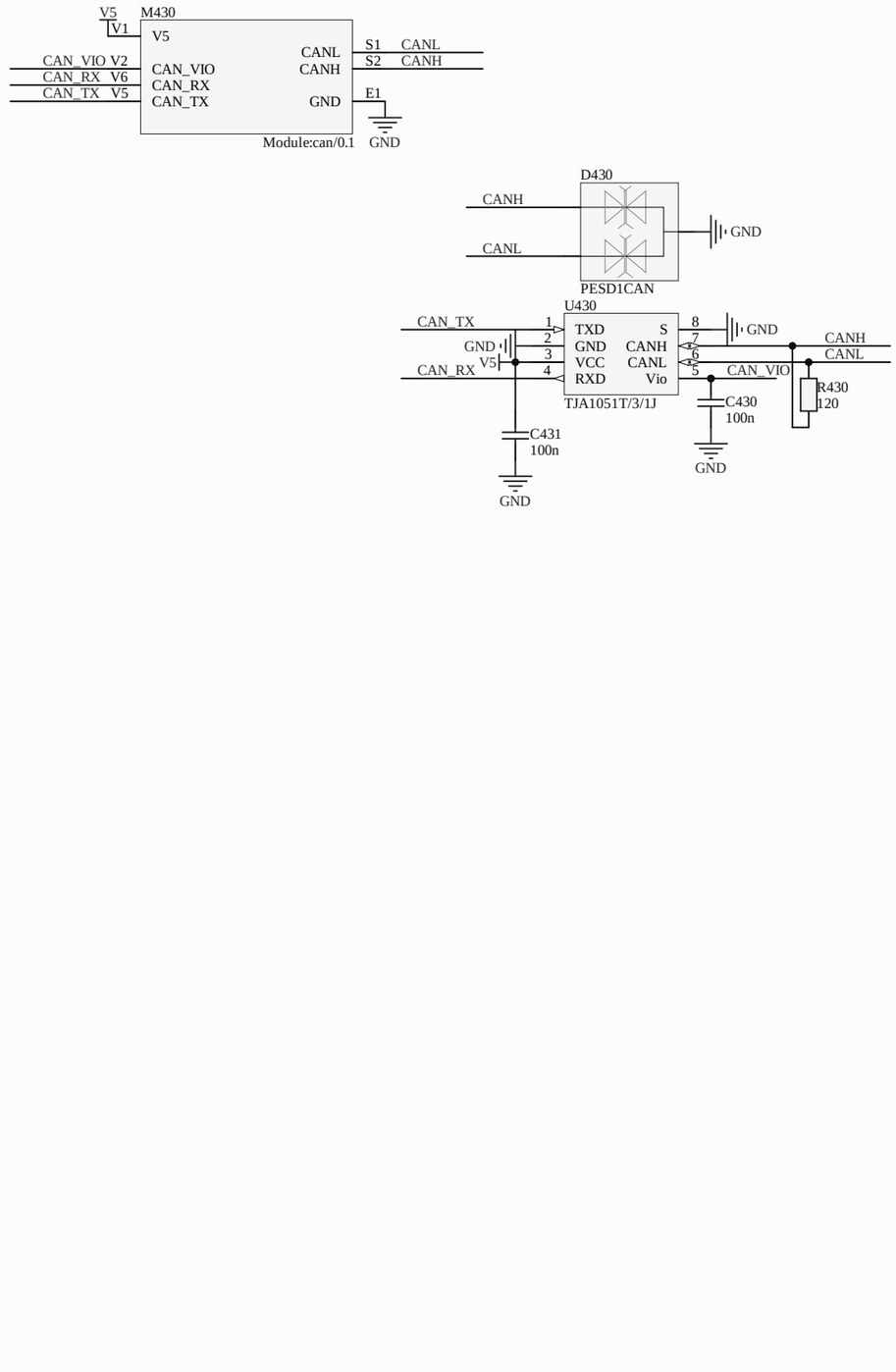

Title: ***Hellen-One CAN***			***rusEFI EMS*** ***Hellen-One Platform*** *https://rusefi.com/s/hellen72*
Size: A3	Author: andreika	Revision: 0.1	
Date: 02.03.2021		Sheet 1 of 1	

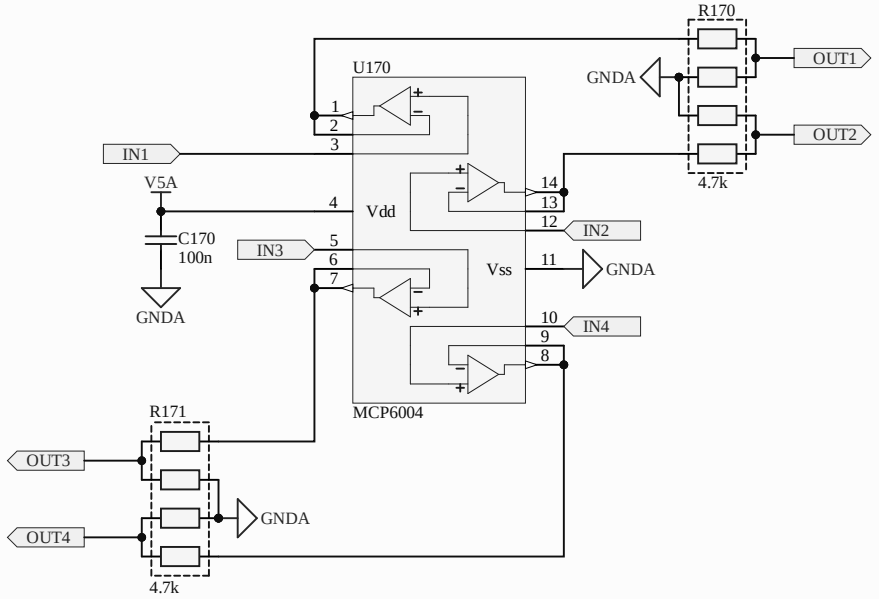
R170
U170
GNDA
OUT1
OUT2
IN1
V5A
Vdd
4.7k
C170
100n
IN3
IN2
Vss
GNDA
GNDA
IN4
MCP6004
R171
OUT3
GNDA
OUT4
4.7k

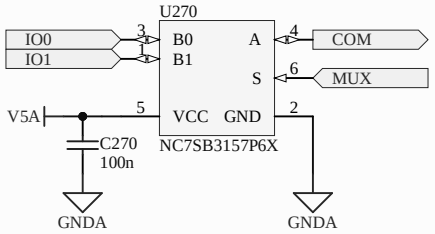
U270
IO0
IO1
3
1
B0
B1
A
S
4
COM
6
MUX
V5A
5
VCC
GND
2
C270
100n
NC7SB3157P6X
GNDA
GNDA

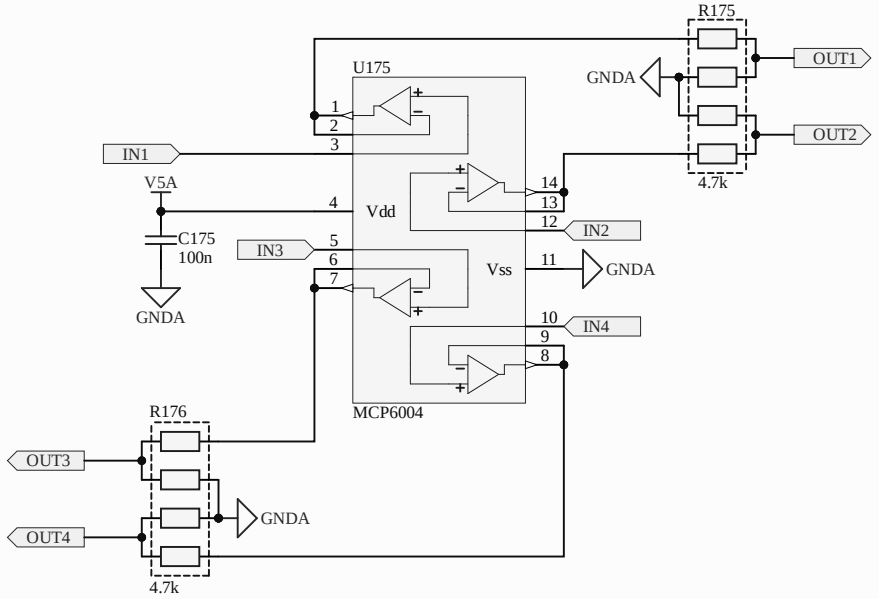
R175
U175
GNDA
OUT1
OUT2
IN1
V5A
Vdd
4.7k
C175
100n
IN3
IN2
Vss
GNDA
GNDA
IN4
MCP6004
R176
OUT3
GNDA
OUT4
4.7k

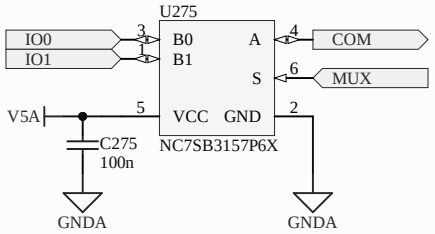
U275
IO0
IO1
3
1
B0
B1
A
S
4
6
COM
MUX
V5A
5
VCC
GND
2
C275
100n
NC7SB3157P6X
GNDA
GNDA

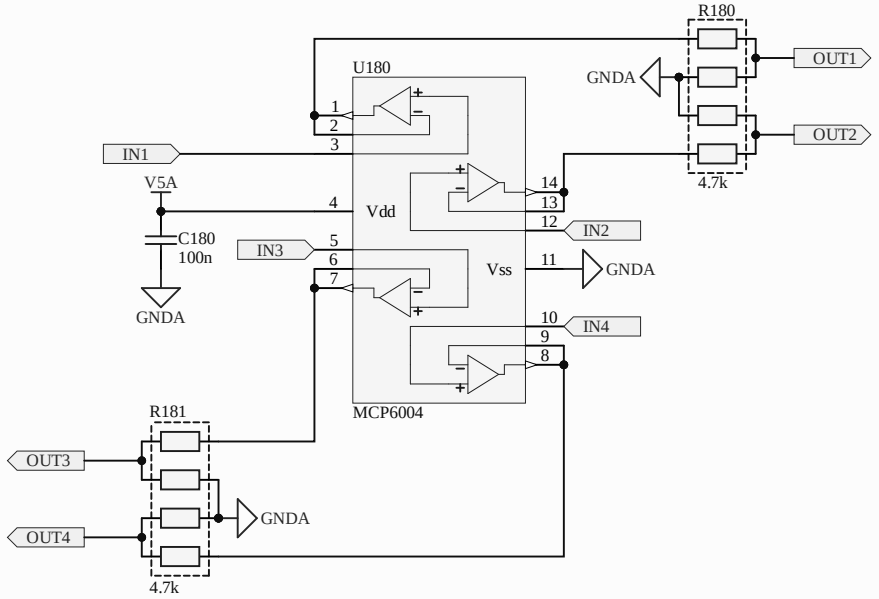
R180
U180
GNDA
OUT1
OUT2
IN1
V5A
Vdd
4.7k
C180
100n
IN3
IN2
Vss
GNDA
GNDA
IN4
MCP6004
R181
OUT3
GNDA
OUT4
4.7k

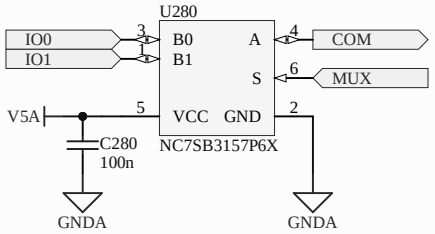
U280
IO0
IO1
3
1
B0
B1
A
S
4
COM
6
MUX
V5A
5
VCC
GND
2
C280
100n
NC7SB3157P6X
GNDA
GNDA

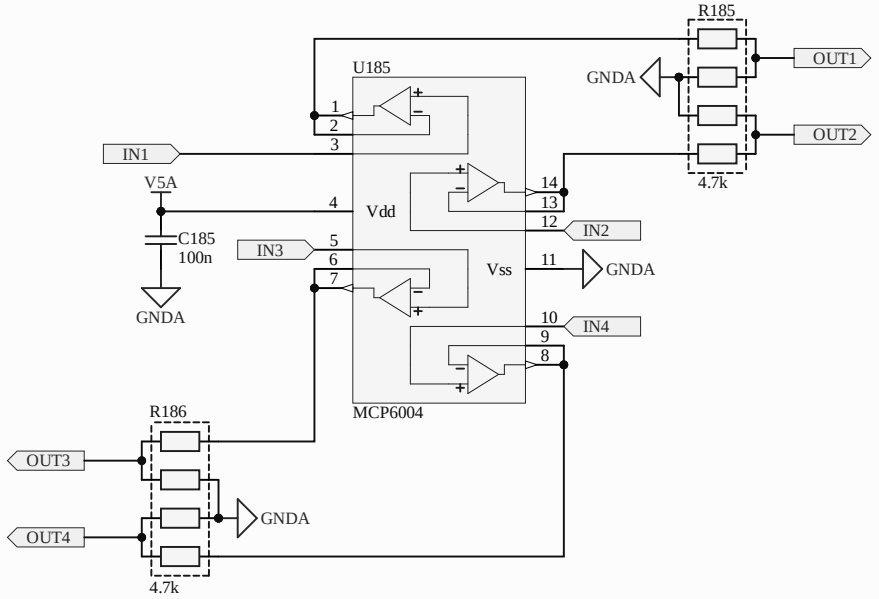
R185
U185
GNDA
OUT1
OUT2
IN1
V5A
4
Vdd
14
13
12
IN2
C185
100n
IN3
5
6
7
Vss
11
GNDA
GNDA
10
IN4
9
8
MCP6004
R186
OUT3
OUT4
GNDA
4.7k
4.7k

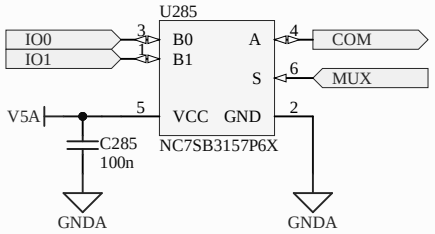
U285
IO0
IO1
3
1
B0
B1
A
S
4
COM
6
MUX
V5A
5
VCC
GND
2
C285
100n
NC7SB3157P6X
GNDA
GNDA

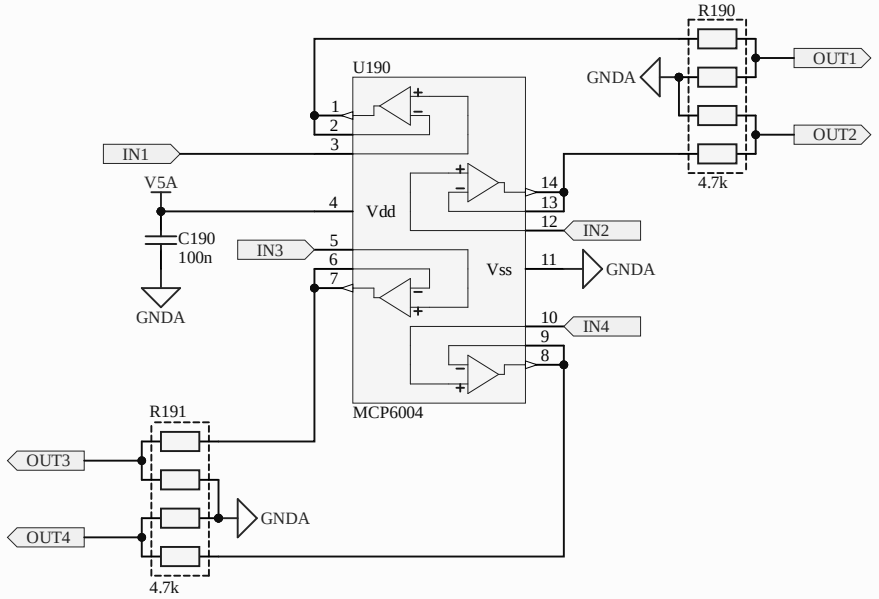
R190
U190
GNDA
OUT1
OUT2
IN1
V5A
Vdd
4.7k
C190
100n
IN3
IN2
Vss
GNDA
GNDA
IN4
MCP6004
R191
OUT3
GNDA
OUT4
4.7k

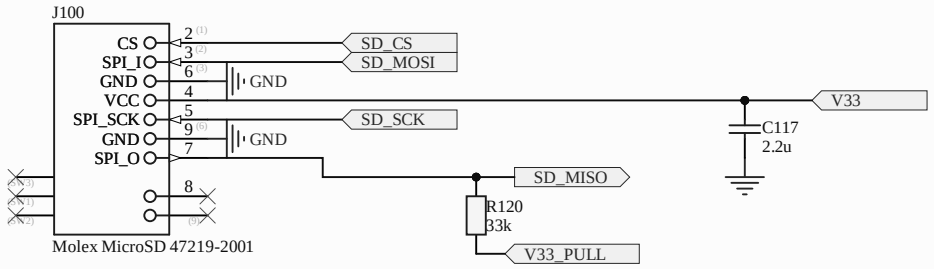
J100
CS
SPI_I
GND
VCC
SPI_SCK
GND
SPI_O
2
3
6
4
5
9
7
8
SD_CS
SD_MOSI
GND
SD_SCK
GND
SD_MISO
V33
C117
2.2u
R120
33k
V33_PULL
Molex MicroSD 47219-2001

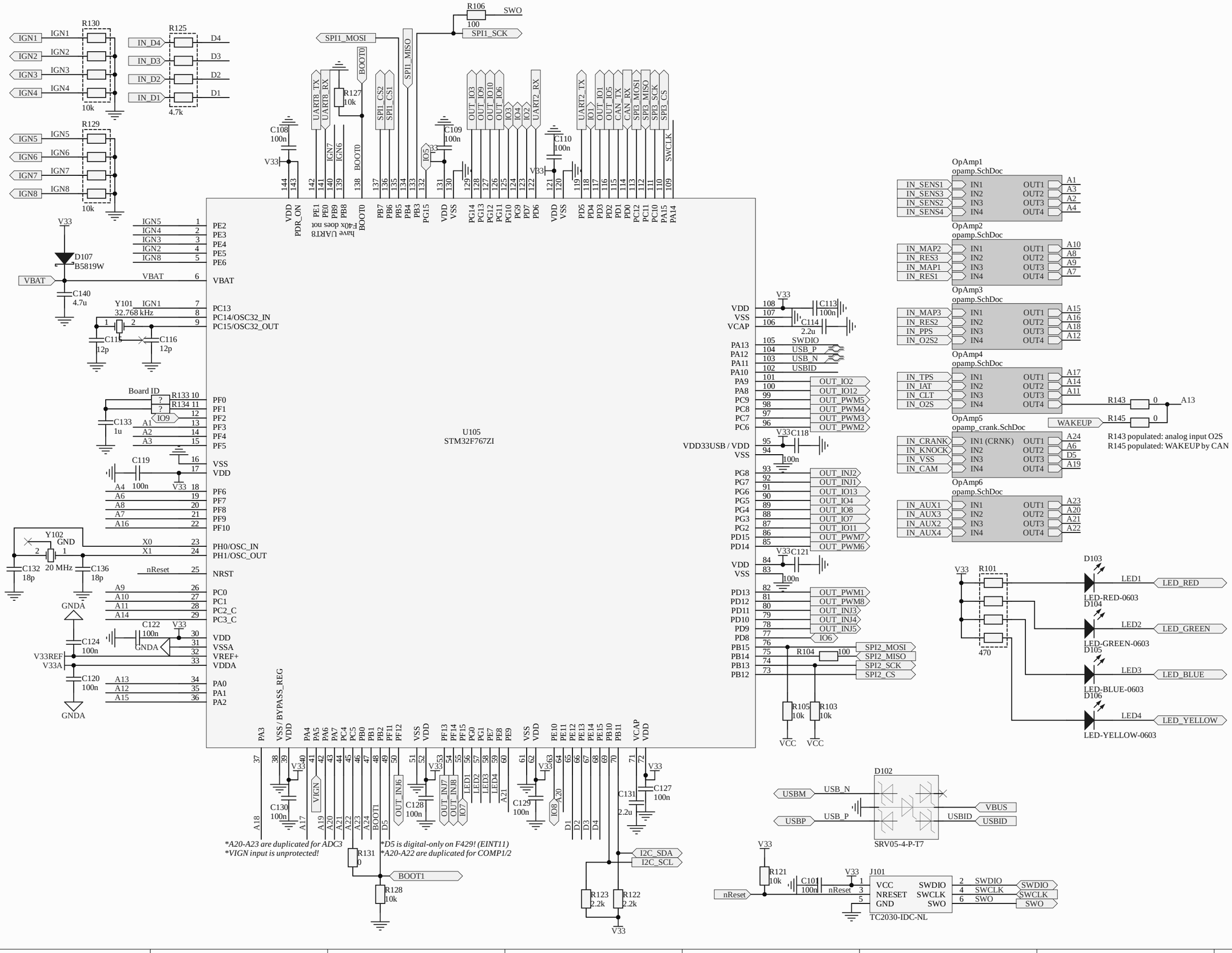
R130
R125
R129
IGN1
IGN2
IGN3
IGN4
IGN5
IGN6
IGN7
IGN8
IN_D4
IN_D3
IN_D2
IN_D1
D4
D3
D2
D1
10k
4.7k
R106
SWO
100
SPI1_SCK
SPI1_MOSI
SPI1_MISO
BOOT0
R127
10k
C108
100n
C109
100n
C110
100n
V33
UART8_TX
UART8_RX
SPI1_CS2
SPI1_CS1
OUT_IO3
OUT_IO9
OUT_IO10
OUT_IO6
IO3
IO4
IO2
UART2_RX
UART2_TX
IO1
OUT_IO1
OUT_IO5
CAN_TX
CAN_RX
SPI3_MOSI
SPI3_MISO
SPI3_SCK
SPI3_CS
SWCLK
VDD
PDR_ON
PE1
PE0
PB9
PB8
have UART8
F40x does not
BOOT0
PB7
PB6
PB5
PB4
PB3
PG15
VSS
PG14
PG13
PG12
PG11
PG10
PC9
PD7
PD6
PD5
PD4
PD3
PD2
PD1
PD0
PC12
PC11
PC10
PA15
PA14
D107
B5819W
VBAT
C140
4.7u
Y101
32.768 kHz
C115
12p
C116
12p
PE2
PE3
PE4
PE5
PE6
PC13
PC14/OSC32_IN
PC15/OSC32_OUT
Board ID
R133
R134
IO9
C133
1u
PF0
PF1
PF2
PF3
PF4
PF5
C119
100n
VSS
VDD
PF6
PF7
PF8
PF9
PF10
Y102
GND
20 MHz
C132
18p
C136
18p
PH0/OSC_IN
PH1/OSC_OUT
nReset
NRST
PC0
PC1
PC2_C
PC3_C
GNDA
C124
100n
C122
100n
VDD
VSSA
VREF+
VDDA
V33REF
V33A
C120
100n
PA0
PA1
PA2
U105
STM32F767ZI
VDD
VSS
VCAP
C113
100n
C114
2.2u
PA13
PA12
PA11
PA10
PA9
PA8
PC9
PC8
PC7
PC6
SWDIO
USB_P
USB_N
USBID
OUT_IO2
OUT_IO12
OUT_PWM5
OUT_PWM4
OUT_PWM3
OUT_PWM2
VDD33USB / VDD
C118
100n
PG8
PG7
PG6
PG5
PG4
PG3
PG2
PD15
PD14
OUT_INJ2
OUT_INJ1
OUT_IO13
OUT_IO4
OUT_IO8
OUT_IO7
OUT_IO11
OUT_PWM7
OUT_PWM6
C121
100n
PD13
PD12
PD11
PD10
PD9
PD8
PB15
PB14
PB13
PB12
OUT_PWM1
OUT_PWM8
OUT_INJ3
OUT_INJ4
OUT_INJ5
IO6
SPI2_MOSI
SPI2_MISO
SPI2_SCK
SPI2_CS
R104
100
R105
10k
R103
10k
VCC
OpAmp1
opamp.SchDoc
IN_SENS1
IN_SENS3
IN_SENS2
IN_SENS4
IN1
IN2
IN3
IN4
OUT1
OUT2
OUT3
OUT4
A1
A3
A2
A4
OpAmp2
IN_MAP2
IN_RES3
IN_MAP1
IN_RES1
A10
A8
A9
A7
OpAmp3
IN_MAP3
IN_RES2
IN_PPS
IN_O2S2
A15
A16
A18
A12
OpAmp4
IN_TPS
IN_IAT
IN_CLT
IN_O2S
A17
A14
A11
OpAmp5
opamp_crank.SchDoc
IN_CRANK
IN_KNOCK
IN_VSS
IN_CAM
IN1 (CRNK)
A24
A6
D5
A19
OpAmp6
IN_AUX1
IN_AUX3
IN_AUX2
IN_AUX4
A23
A20
A21
A22
R143
R145
WAKEUP
A13
R143 populated: analog input O2S
R145 populated: WAKEUP by CAN
R101
470
D103
LED1
LED_RED
LED-RED-0603
D104
LED2
LED_GREEN
LED-GREEN-0603
D105
LED3
LED_BLUE
LED-BLUE-0603
D106
LED4
LED_YELLOW
LED-YELLOW-0603
D102
USBM
USBP
VBUS
SRV05-4-P-T7
R121
10k
C101
100n
J101
VCC
NRESET
GND
SWDIO
SWCLK
SWO
TC2030-IDC-NL
PA3
VSS / BYPASS_REG
PA4
PA5
PA6
PA7
PC4
PC5
PB0
PB1
PB2
PF11
PF12
PF13
PF14
PF15
PG0
PG1
PE7
PE8
PE9
PE10
PE11
PE12
PE13
PE14
PE15
PB10
PB11
VIGN
OUT_INJ6
OUT_INJ7
OUT_INJ8
IO7
IO8
LED1
LED2
LED3
LED4
A21
A20
BOOT1
D5
D1
D2
D3
D4
A18
A19
A17
C130
100n
C128
100n
C129
100n
C131
2.2u
C127
100n
*A20-A23 are duplicated for ADC3
*VIGN input is unprotected!
*D5 is digital-only on F429! (EINT11)
*A20-A22 are duplicated for COMP1/2
R131
0
R128
10k
R123
2.2k
R122
2.2k
I2C_SDA
I2C_SCL

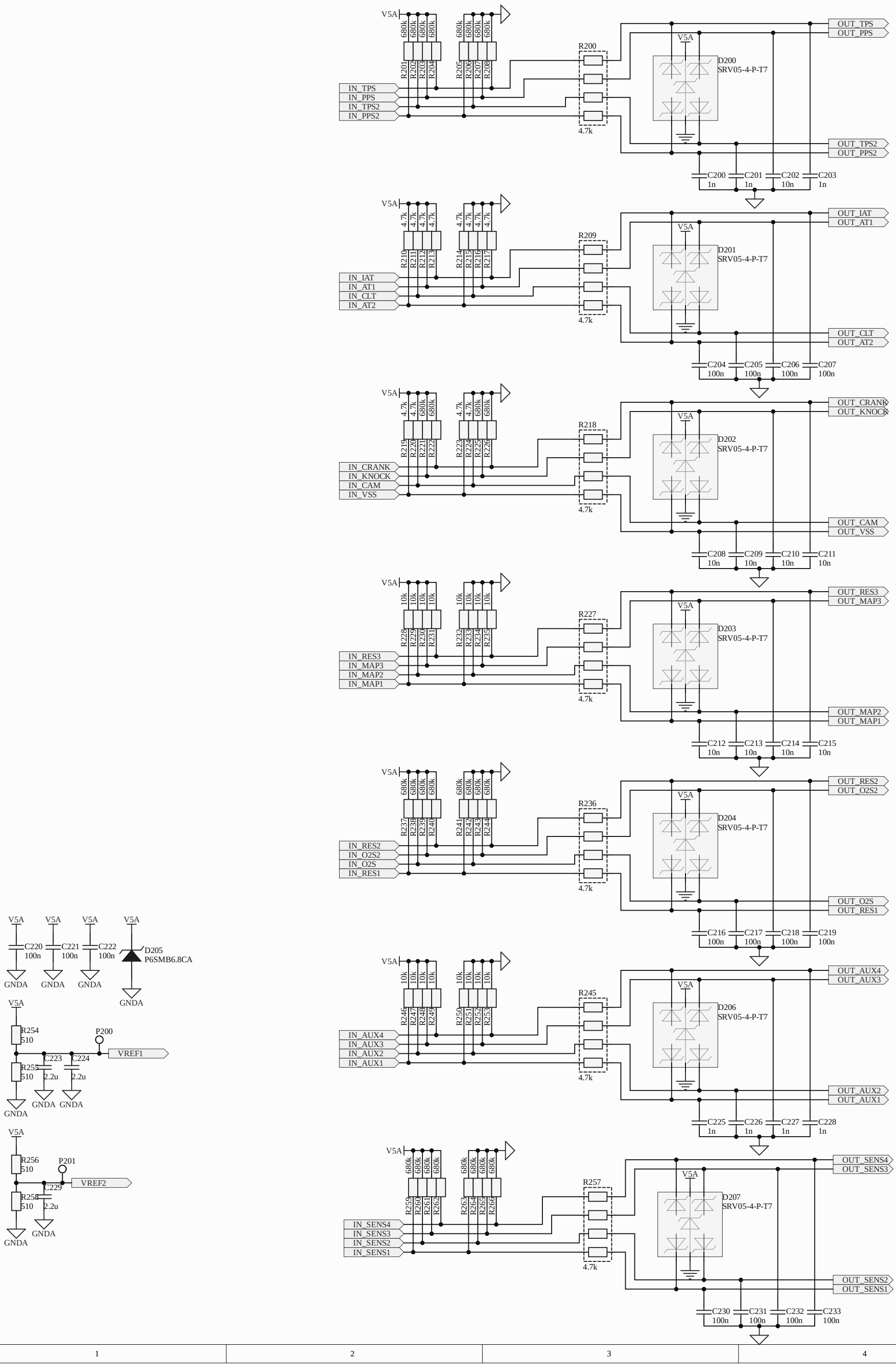
V5A
680k
R201
R202
R203
R204
R205
R206
R207
R208
IN_TPS
IN_PPS
IN_TPS2
IN_PPS2
R200
4.7k
D200
SRV05-4-P-T7
OUT_TPS
OUT_PPS
OUT_TPS2
OUT_PPS2
C200 1n
C201 1n
C202 10n
C203 1n
4.7k
R210
R211
R212
R213
R214
R215
R216
R217
IN_IAT
IN_AT1
IN_CLT
IN_AT2
R209
D201
OUT_IAT
OUT_AT1
OUT_CLT
OUT_AT2
C204 100n
C205 100n
C206 100n
C207 100n
R219
R220
R221
R222
R223
R224
R225
R226
IN_CRANK
IN_KNOCK
IN_CAM
IN_VSS
R218
D202
OUT_CRANK
OUT_KNOCK
OUT_CAM
OUT_VSS
C208 10n
C209 10n
C210 10n
C211 10n
10k
R228
R229
R230
R231
R232
R233
R234
R235
IN_RES3
IN_MAP3
IN_MAP2
IN_MAP1
R227
D203
OUT_RES3
OUT_MAP3
OUT_MAP2
OUT_MAP1
C212 10n
C213 10n
C214 10n
C215 10n
R237
R238
R239
R240
R241
R242
R243
R244
IN_RES2
IN_O2S2
IN_O2S
IN_RES1
R236
D204
OUT_RES2
OUT_O2S2
OUT_O2S
OUT_RES1
C216 100n
C217 100n
C218 100n
C219 100n
R246
R247
R248
R249
R250
R251
R252
R253
IN_AUX4
IN_AUX3
IN_AUX2
IN_AUX1
R245
D206
OUT_AUX4
OUT_AUX3
OUT_AUX2
OUT_AUX1
C225 1n
C226 1n
C227 1n
C228 1n
R259
R260
R261
R262
R263
R264
R265
R266
IN_SENS4
IN_SENS3
IN_SENS2
IN_SENS1
R257
D207
OUT_SENS4
OUT_SENS3
OUT_SENS2
OUT_SENS1
C230 100n
C231 100n
C232 100n
C233 100n
C220 100n
C221 100n
C222 100n
D205
P6SMB6.8CA
GNDA
R254 510
P200
VREF1
C223
C224
R255 510
2.2u
R256 510
P201
VREF2
C229
R258 510

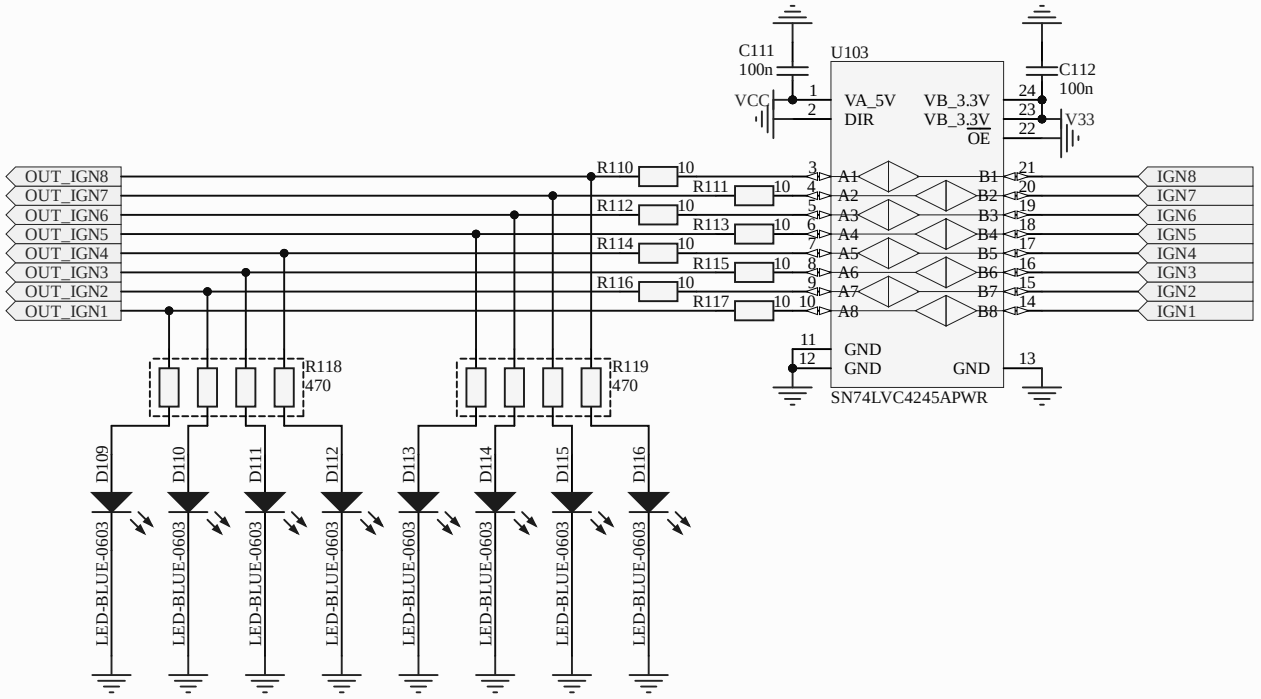
C111
100n
VCC
U103
VA_5V
DIR
VB_3.3V
VB_3.3V
OE
C112
100n
V33
GND
GND
GND
SN74LVC4245APWR
OUT_IGN8
OUT_IGN7
OUT_IGN6
OUT_IGN5
OUT_IGN4
OUT_IGN3
OUT_IGN2
OUT_IGN1
R110
R111
R112
R113
R114
R115
R116
R117
R118
470
R119
470
A1
A2
A3
A4
A5
A6
A7
A8
B1
B2
B3
B4
B5
B6
B7
B8
IGN8
IGN7
IGN6
IGN5
IGN4
IGN3
IGN2
IGN1
D109
D110
D111
D112
D113
D114
D115
D116
LED-BLUE-0603

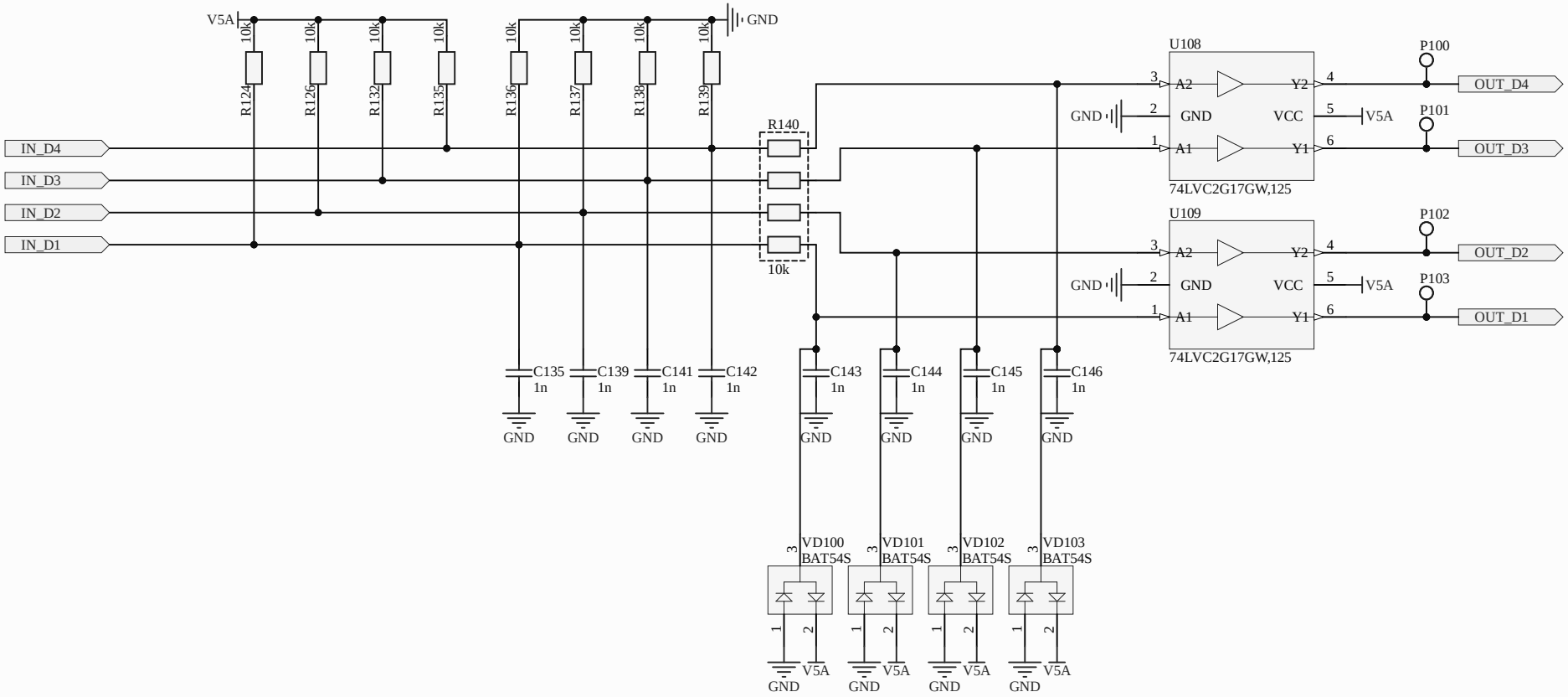
V5A
GND
10k
R124
R126
R132
R135
R136
R137
R138
R139
R140
IN_D4
IN_D3
IN_D2
IN_D1
C135 1n
C139 1n
C141 1n
C142 1n
C143 1n
C144 1n
C145 1n
C146 1n
U108
U109
A2
A1
GND
VCC
Y2
Y1
74LVC2G17GW,125
P100
P101
P102
P103
OUT_D4
OUT_D3
OUT_D2
OUT_D1
VD100 BAT54S
VD101 BAT54S
VD102 BAT54S
VD103 BAT54S

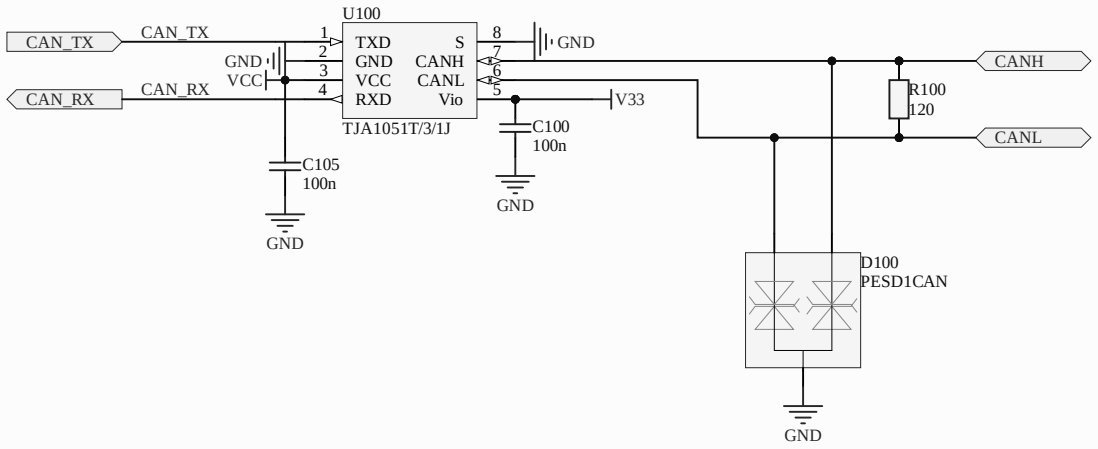
U100
CAN_TX
CAN_TX
CAN_RX
CAN_RX
GND
VCC
1
2
3
4
TXD
GND
VCC
RXD
S
CANH
CANL
Vio
8
7
6
5
GND
V33
CANH
CANL
R100
120
C105
100n
C100
100n
TJA1051T/3/1J
D100
PESD1CAN
GND
GND
GND

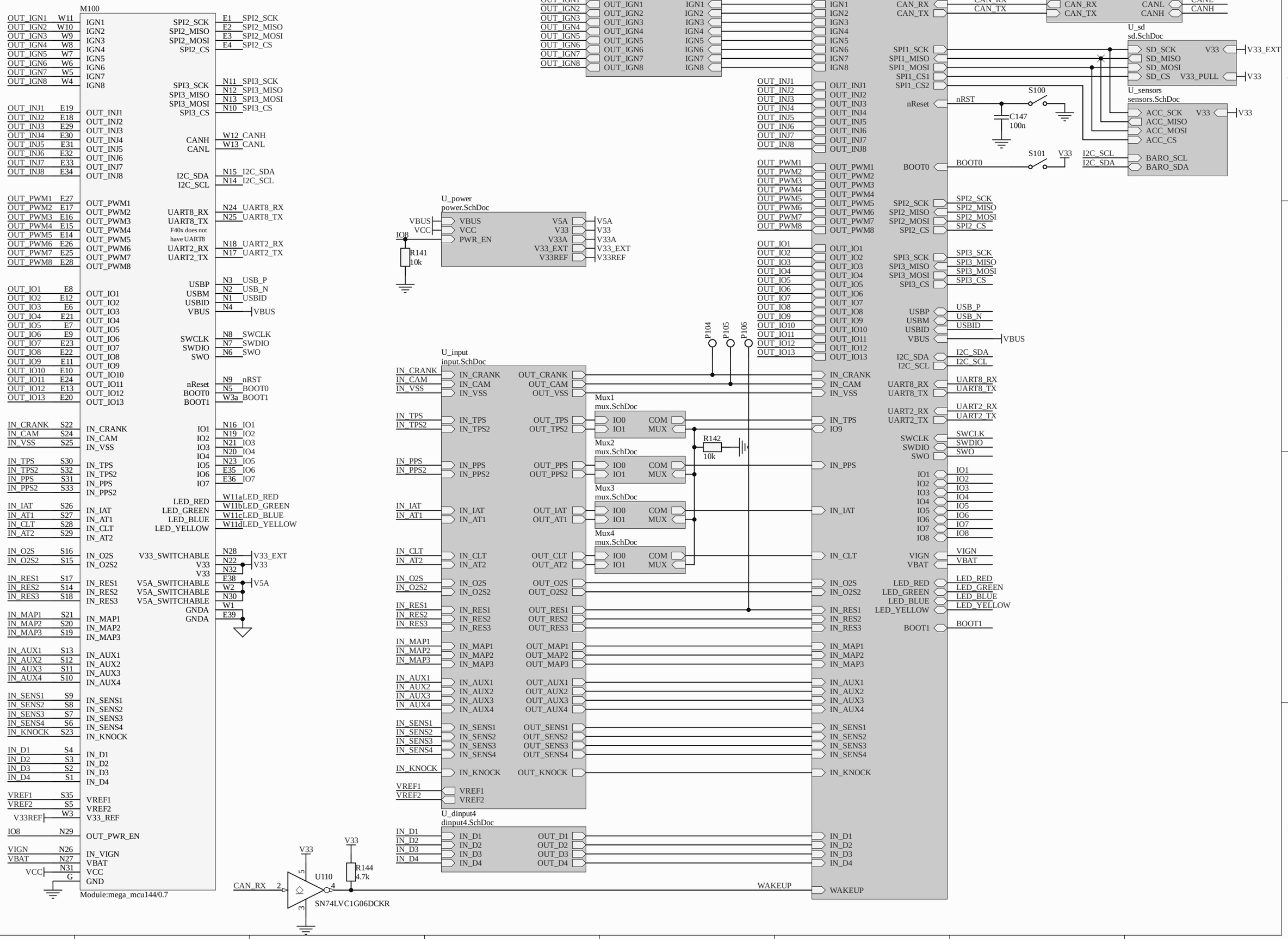
M100
Module:mega_mcu144/0.7
U_ign8
ign8.SchDoc
U_mcu
mcu.SchDoc
U_can
can.SchDoc
U_sd
sd.SchDoc
U_sensors
sensors.SchDoc
U_power
power.SchDoc
U_input
input.SchDoc
Mux1
mux.SchDoc
Mux2
mux.SchDoc
Mux3
mux.SchDoc
Mux4
mux.SchDoc
U_dinput4
dinput4.SchDoc
S100
S101
C147
100n
R141
10k
R142
10k
R144
4.7k
U110
SN74LVC1G06DCKR
P104
P105
P106
V33_EXT
V33
V5A
V33A
V33_EXT
V33REF
WAKEUP

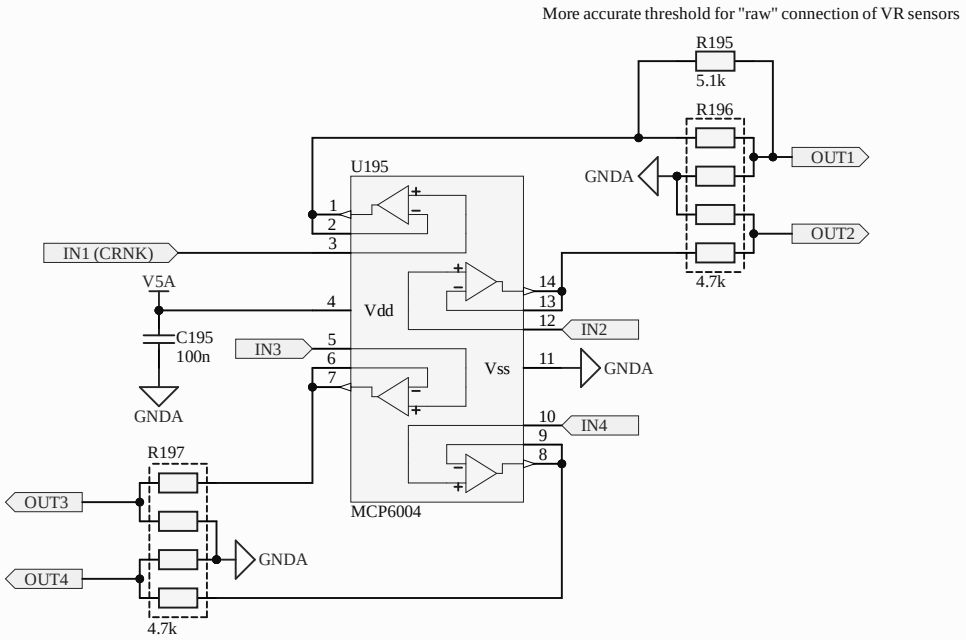
More accurate threshold for "raw" connection of VR sensors
R195
5.1k
R196
OUT1
GNDA
OUT2
4.7k
U195
1
2
3
IN1 (CRNK)
V5A
4
Vdd
14
13
12
IN2
C195
100n
IN3
5
6
7
Vss
11
GNDA
GNDA
10
IN4
9
8
R197
OUT3
OUT4
GNDA
4.7k
MCP6004

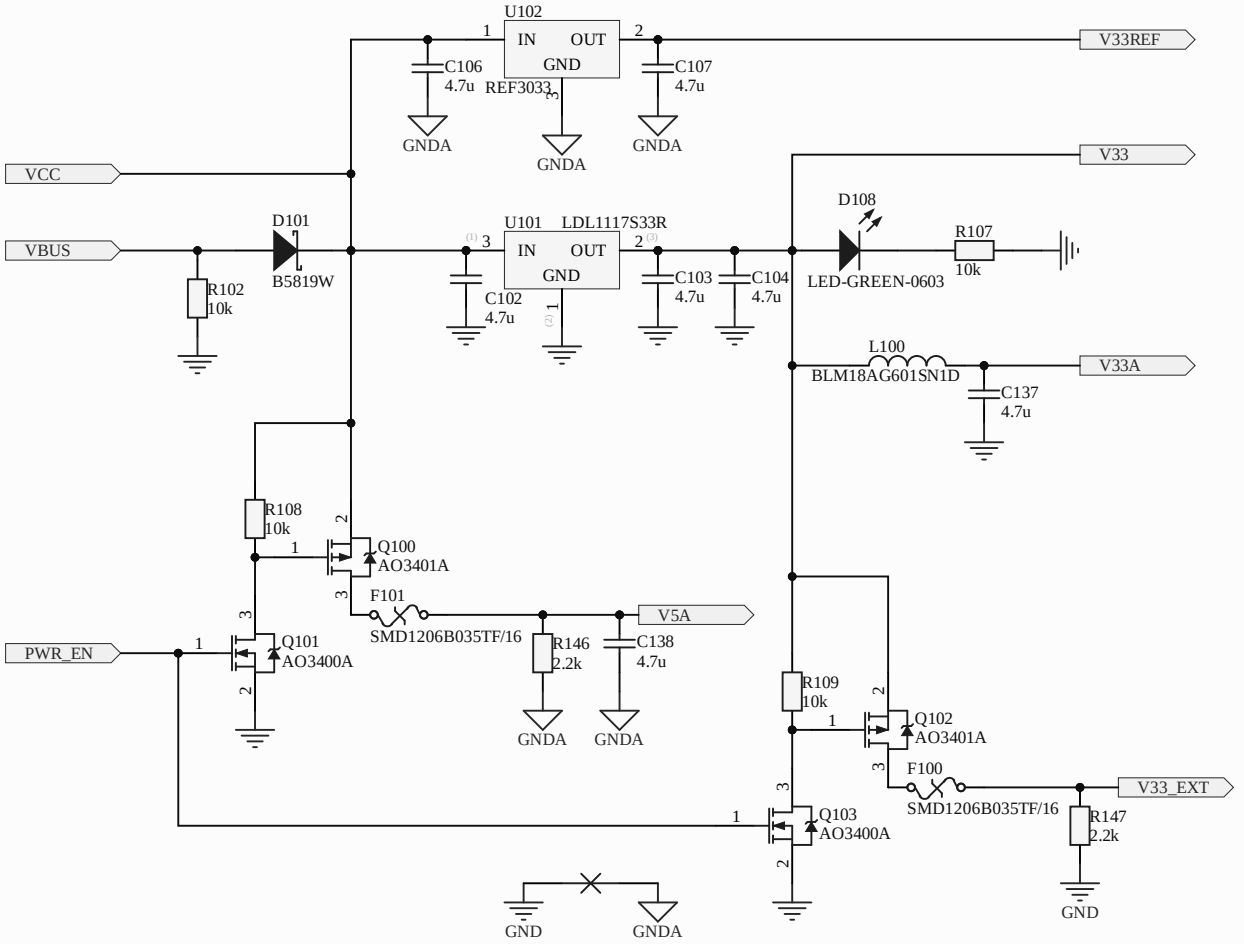

Title		
Size A4	Number	Revision
Date: 2.15.2025		Sheet of
File: C:\Work\..\power.SchDoc		Drawn By:

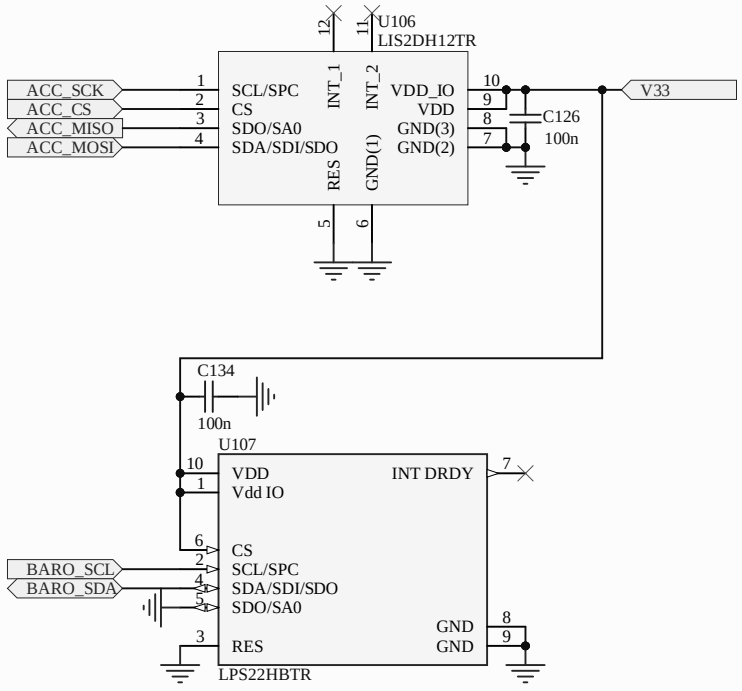
U106
LIS2DH12TR
ACC_SCK
ACC_CS
ACC_MISO
ACC_MOSI
SCL/SPC
CS
SDO/SA0
SDA/SDI/SDO
INT_1
INT_2
RES
GND(1)
VDD_IO
VDD
GND(3)
GND(2)
C126
100n
V33
C134
100n
U107
VDD
Vdd IO
INT DRDY
CS
SCL/SPC
SDA/SDI/SDO
SDO/SA0
RES
GND
GND
BARO_SCL
BARO_SDA
LPS22HBTR