Without accelerometer and SD card

Bus types
General purpose bus
Ignition
Injection
Outputs
Analog inputs (sensors)
Discrete inputs

Power

ETB driver

LEDs

Prototype areas

FOR OFF ROAD PURPOSES ONLY
This is not for applications with emissions or safety regulations (AKA not for street use). This is for closed stages, track and equipment.

Board info
Hellen-One-PCB-logo
http://rusefi.com/s/hellen121vag

andreika @ rusEFI.com
Sheet: /
File: hellen121vag.kicad_sch

Title: Hellen121vag
Size: A1 | Date: 2021-06-13 | Rev: c
KiCad E.D.A. kicad (5.99.0-12439-g9495438 6e6) | Id: 1/1

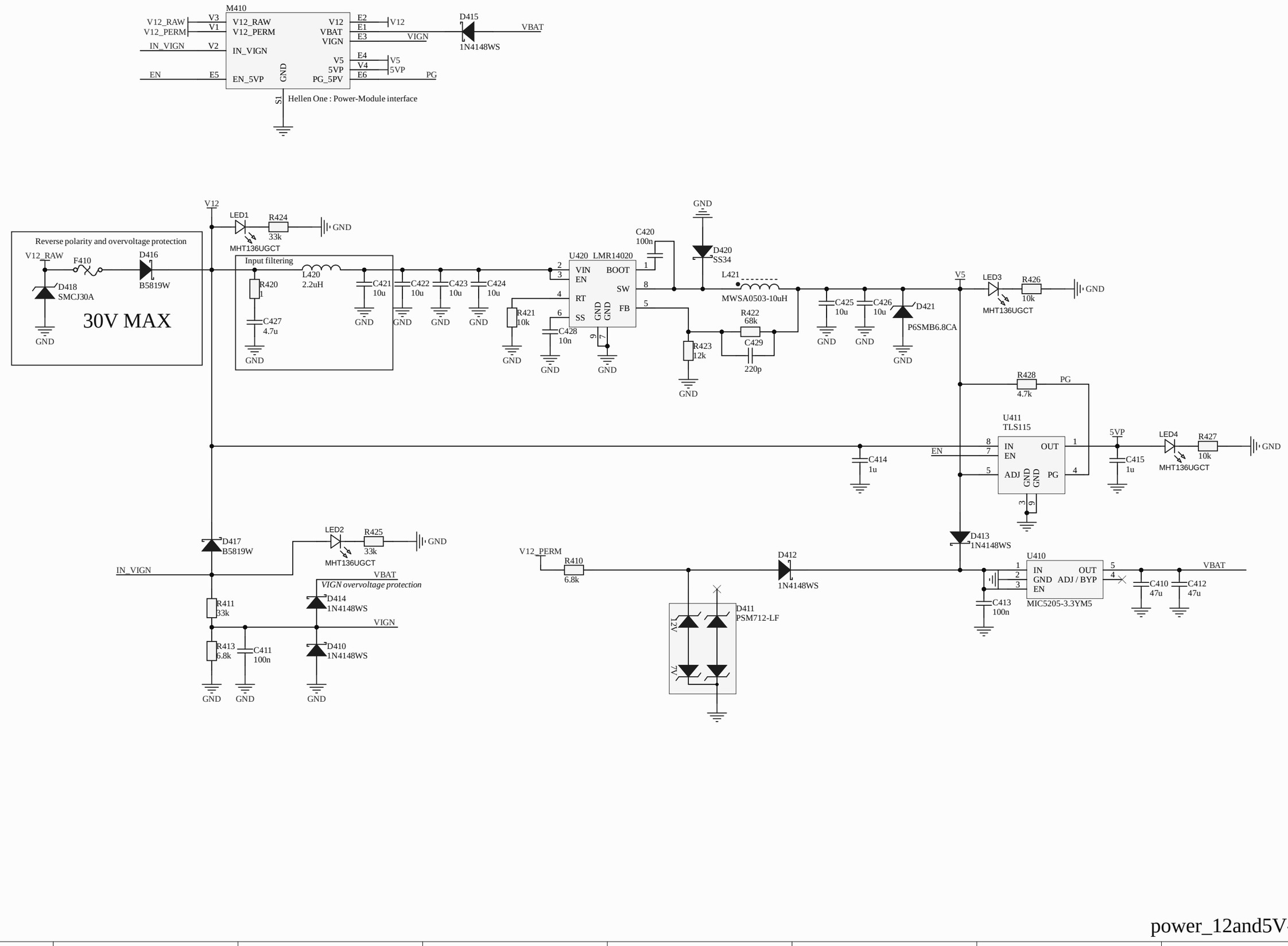

power_12and5V-0.3

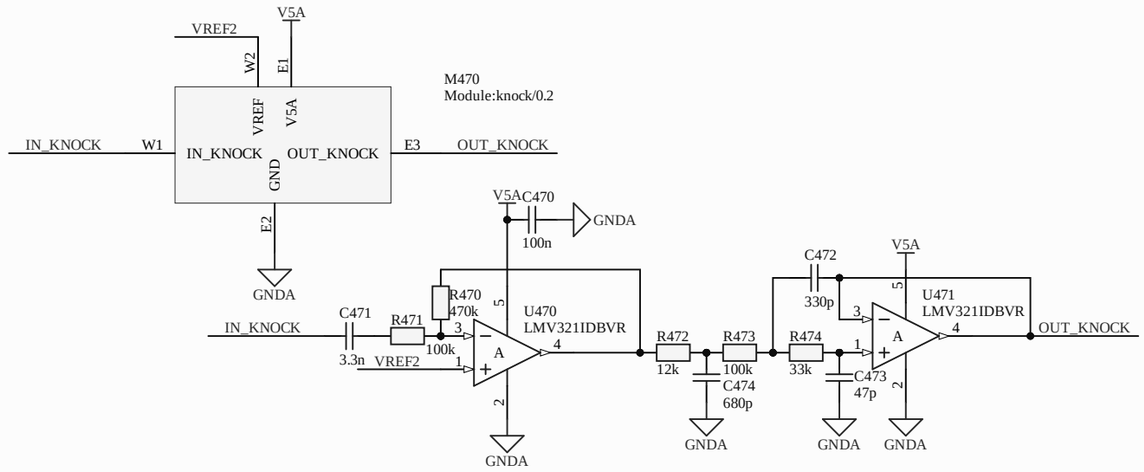

Title: ***Hellen-One Knock***			***rusEFI EMS*** ***Hellen-One Platform*** *https://rusefi.com/s/hellen72*
Size: A3	Author: andreika	Revision: 0.2	
Date: 15.02.2023		Sheet 1 of 1	

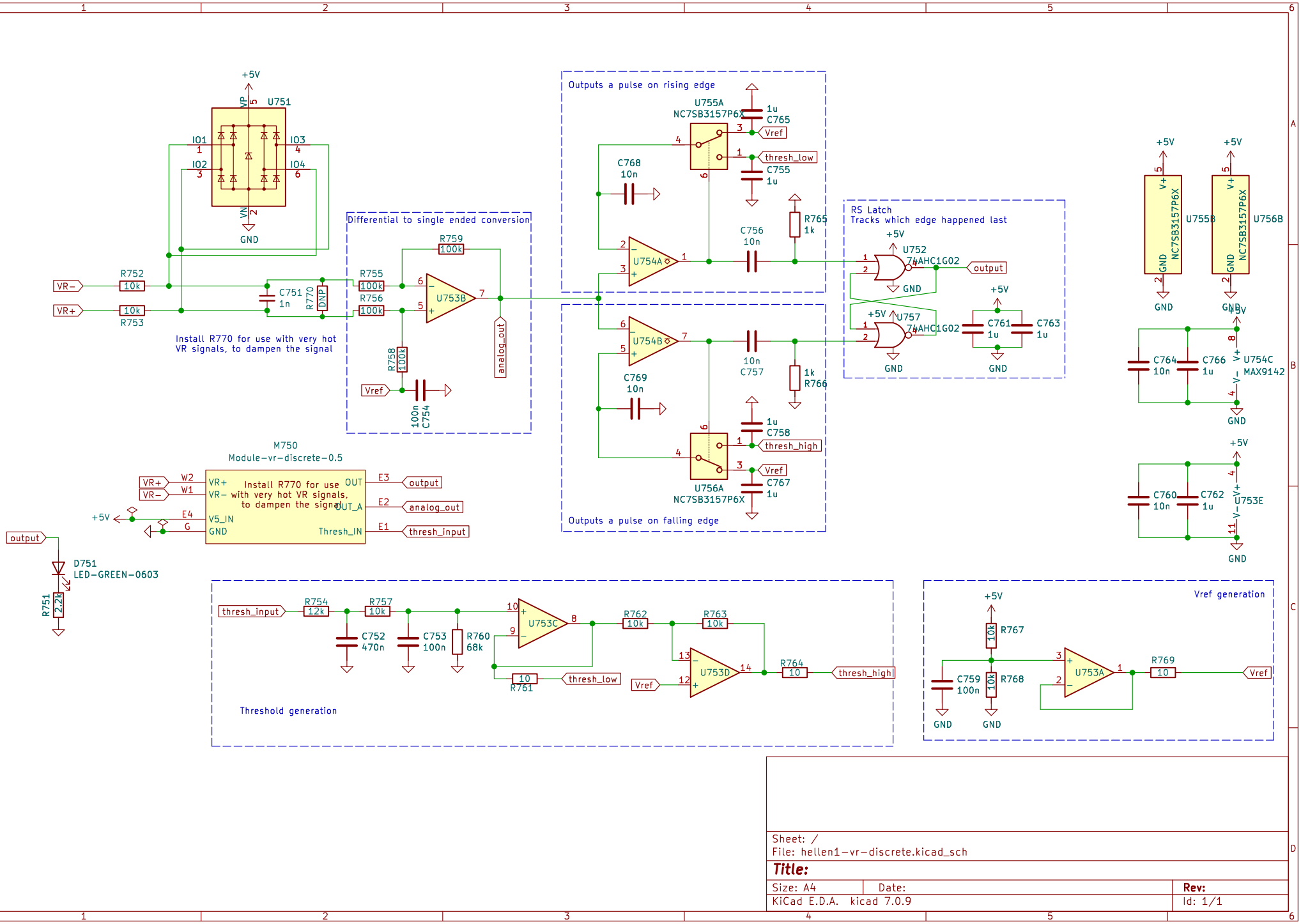
+5V
U751
VP
IO1
IO2
IO3
IO4
VN
GND
VR−
VR+
R752
10k
R753
10k
C751
1n
R770
DNP
Install R770 for use with very hot VR signals, to dampen the signal
Differential to single ended conversion
R759
100k
R755
100k
R756
100k
U753B
R758
100k
Vref
100n
C754
analog_out
Outputs a pulse on rising edge
U755A
NC7SB3157P6X
1u
C765
Vref
thresh_low
C755
1u
C768
10n
U754A
C756
10n
R765
1k
Outputs a pulse on falling edge
U754B
C769
10n
10n
C757
1k
R766
U756A
NC7SB3157P6X
1u
C758
thresh_high
Vref
C767
1u
RS Latch
Tracks which edge happened last
U752
74AHC1G02
output
U757
74AHC1G02
C761
1u
C763
1u
GND
U755B
NC7SB3157P6X
U756B
NC7SB3157P6X
U754C
MAX9142
C764
10n
C766
1u
U753E
C760
10n
C762
1u
M750
Module−vr−discrete−0.5
VR+
VR−
W2
W1
VR+
VR−
Install R770 for use with very hot VR signals, to dampen the signal
V5_IN
GND
OUT
OUT_A
Thresh_IN
E3
E2
E1
E4
G
output
analog_out
thresh_input
output
D751
LED−GREEN−0603
R751
2.2k
Threshold generation
thresh_input
R754
12k
R757
10k
C752
470n
C753
100n
R760
68k
U753C
R762
10k
R763
10k
U753D
R764
10
thresh_high
10
R761
thresh_low
Vref
Vref generation
R767
10k
C759
100n
R768
10k
U753A
R769
10
Vref
Sheet: /
File: hellen1−vr−discrete.kicad_sch
Title:
Size: A4
Date:
Rev:
KiCad E.D.A. kicad 7.0.9
Id: 1/1

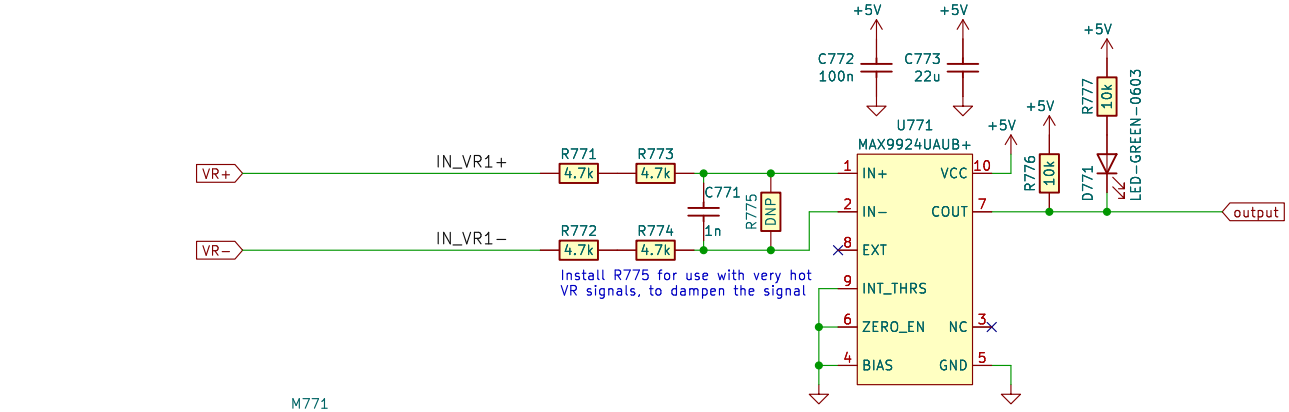

Sheet: /
File: hellen1−vr−max9924.kicad_sch

Title: VR MAX9924 module

Size: A4	Date: 2023−07−25	**Rev: 0.1**
KiCad E.D.A. eeschema 7.0.9		Id: 1/1

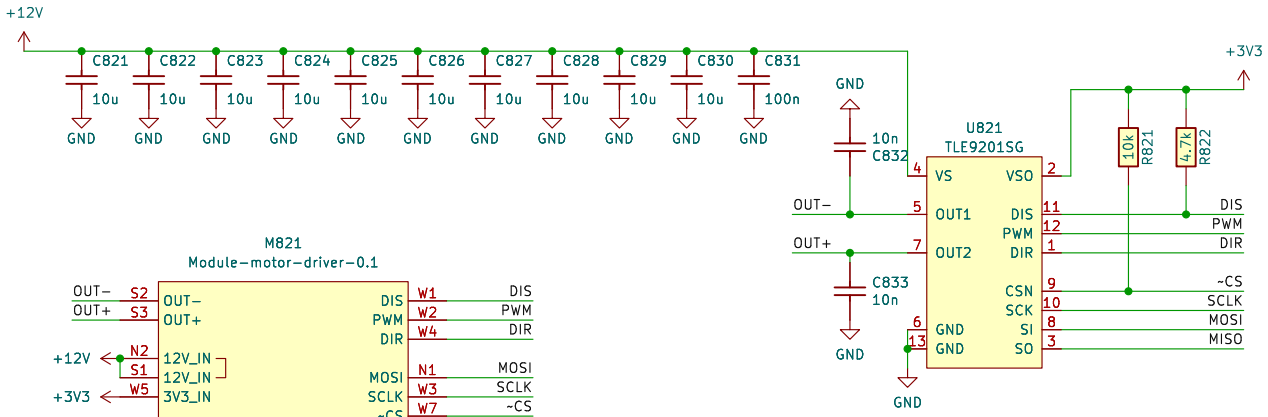

Sheet: /
File: hellen1−motor−driver.kicad_sch

Title: Motor−driver module

Size: A4	Date: 2024−03−07	**Rev: 0.1**
KiCad E.D.A. 8.0.3		Id: 1/1

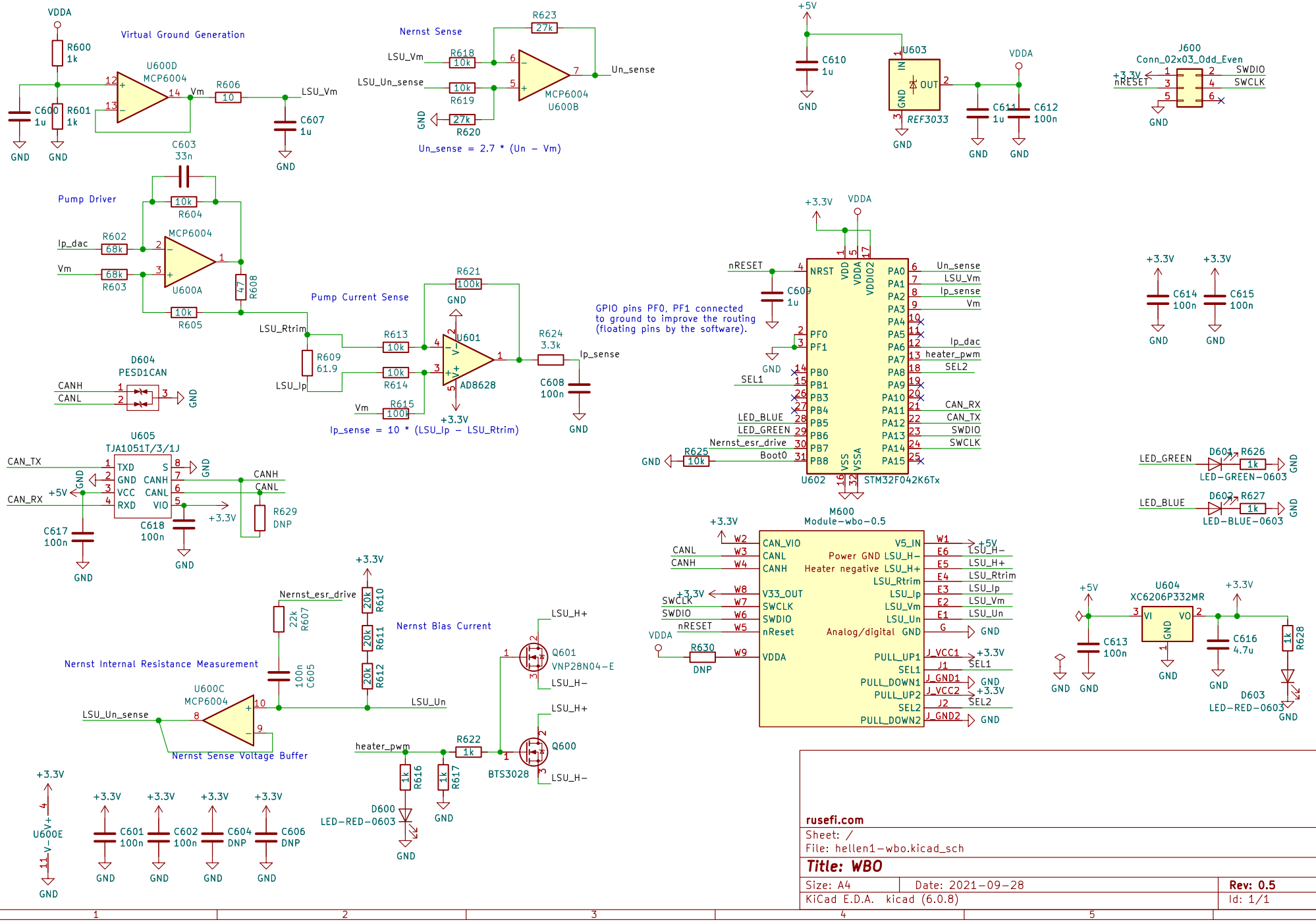
Virtual Ground Generation
U600D
MCP6004
R600 1k
R601 1k
C600 1u
C607 1u
R606 10
Vm
LSU_Vm
Nernst Sense
R623 27k
R618 10k
R619 10k
R620 27k
LSU_Vm
LSU_Un_sense
Un_sense
U600B
Un_sense = 2.7 * (Un − Vm)
+5V
C610 1u
U603
REF3033
C611 1u
C612 100n
VDDA
J600
Conn_02x03_Odd_Even
SWDIO
SWCLK
nRESET
Pump Driver
C603 33n
R604 10k
R605 10k
R602 68k
R603 68k
R608 47
Ip_dac
Vm
U600A
Pump Current Sense
R621 100k
R613 10k
R614 10k
R615 100
R609 61.9
R624 3.3k
C608 100n
U601
AD8628
LSU_Rtrim
LSU_Ip
Ip_sense
Ip_sense = 10 * (LSU_Ip − LSU_Rtrim)
D604
PESD1CAN
CANH
CANL
GPIO pins PF0, PF1 connected
to ground to improve the routing
(floating pins by the software).
nRESET
C609 1u
SEL1
LED_BLUE
LED_GREEN
Nernst_esr_drive
R625 10k
Boot0
U602
STM32F042K6Tx
C614 100n
C615 100n
U605
TJA1051T/3/1J
CAN_TX
CAN_RX
C617 100n
C618 100n
R629 DNP
LED_GREEN
LED_BLUE
D601
D602
R626 1k
R627 1k
LED−GREEN−0603
LED−BLUE−0603
M600
Module−wbo−0.5
Power GND LSU_H−
Heater negative LSU_H+
Analog/digital GND
R630 DNP
U604
XC6206P332MR
C613 100n
C616 4.7u
R628 1k
D603
LED−RED−0603
Nernst Internal Resistance Measurement
Nernst Bias Current
R607 22k
R610 20k
R611 20k
R612 20k
C605 100n
U600C
MCP6004
LSU_Un_sense
Nernst Sense Voltage Buffer
LSU_Un
Q601
VNP28N04−E
Q600
BTS3028
heater_pwm
R622 1k
R616 1k
R617 1k
D600
LED−RED−0603
U600E
C601 100n
C602 100n
C604 DNP
C606 DNP
rusefi.com
Sheet: /
File: hellen1−wbo.kicad_sch
Title: WBO
Size: A4
Date: 2021−09−28
Rev: 0.5
KiCad E.D.A. kicad (6.0.8)
Id: 1/1

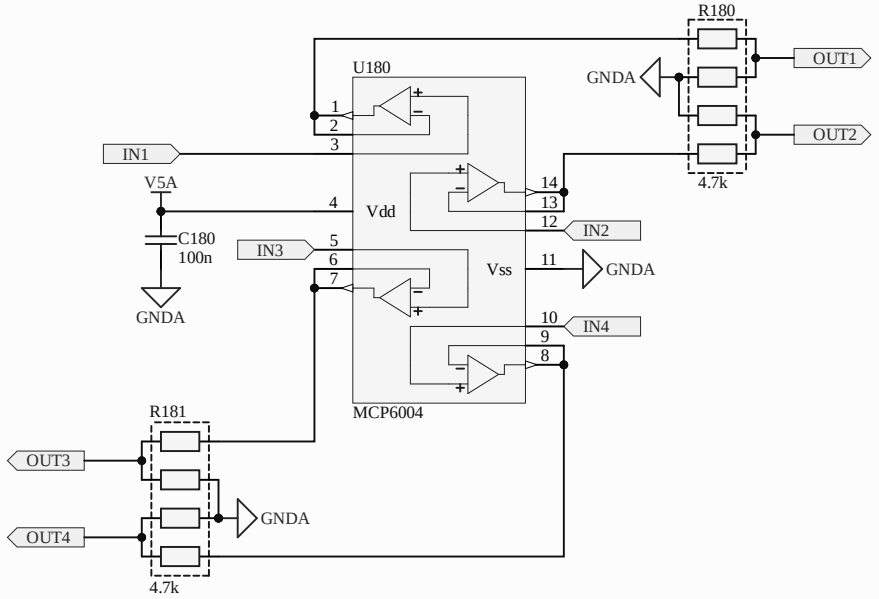
R180
U180
GNDA
OUT1
OUT2
IN1
V5A
Vdd
4.7k
C180
100n
IN3
IN2
Vss
GNDA
GNDA
IN4
MCP6004
R181
OUT3
GNDA
OUT4
4.7k

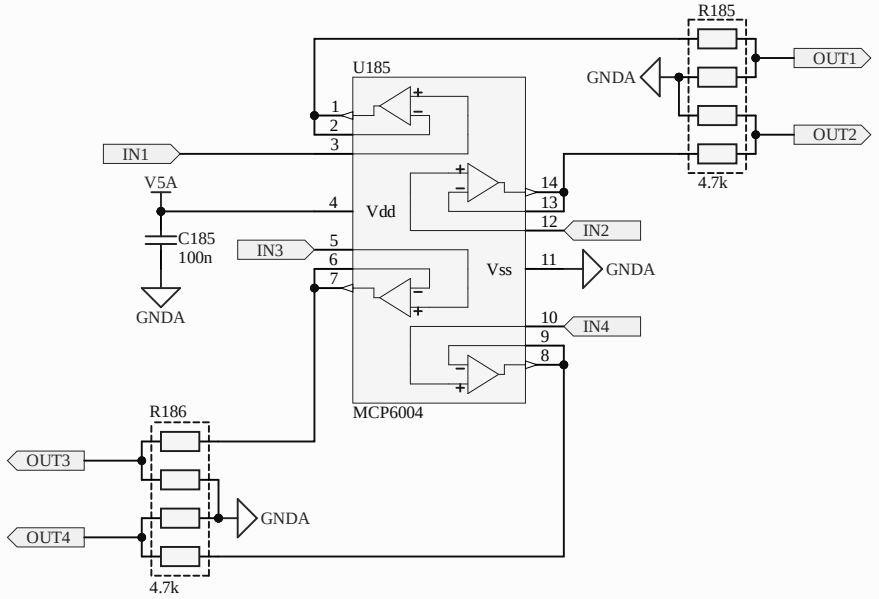
R185
U185
GNDA
OUT1
OUT2
IN1
V5A
4
Vdd
14
13
12
IN2
C185
100n
IN3
5
6
7
Vss
11
GNDA
GNDA
10
IN4
9
8
MCP6004
R186
OUT3
OUT4
GNDA
4.7k
4.7k

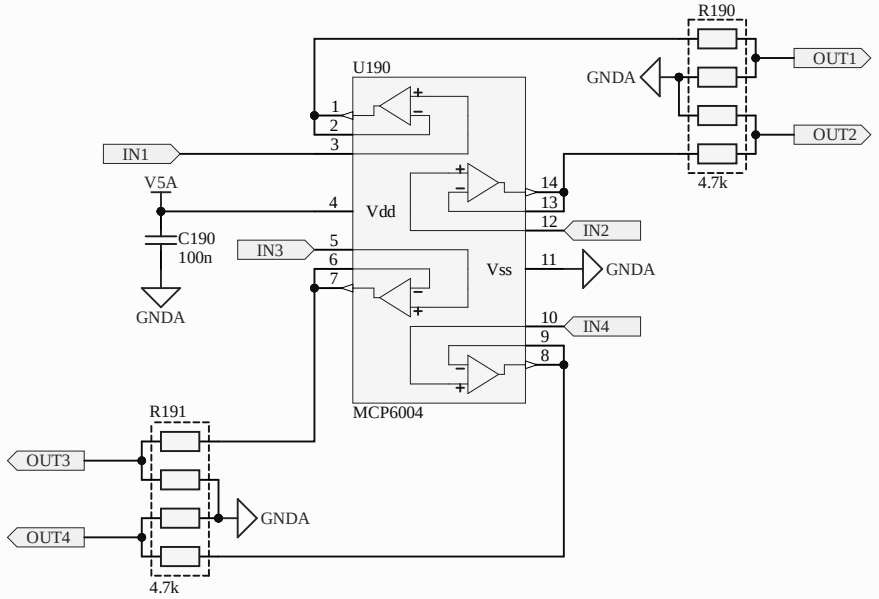
R190
U190
GNDA
OUT1
OUT2
IN1
V5A
Vdd
4.7k
C190
100n
IN3
IN2
Vss
GNDA
GNDA
IN4
MCP6004
R191
OUT3
GNDA
OUT4
4.7k

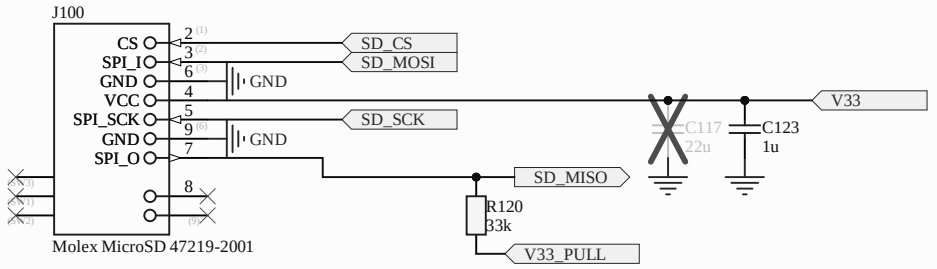
J100
CS
SPI_I
GND
VCC
SPI_SCK
GND
SPI_O
2
3
6
4
5
9
7
8
SD_CS
SD_MOSI
GND
SD_SCK
GND
SD_MISO
R120
33k
V33_PULL
C117
22u
C123
1u
V33
Molex MicroSD 47219-2001

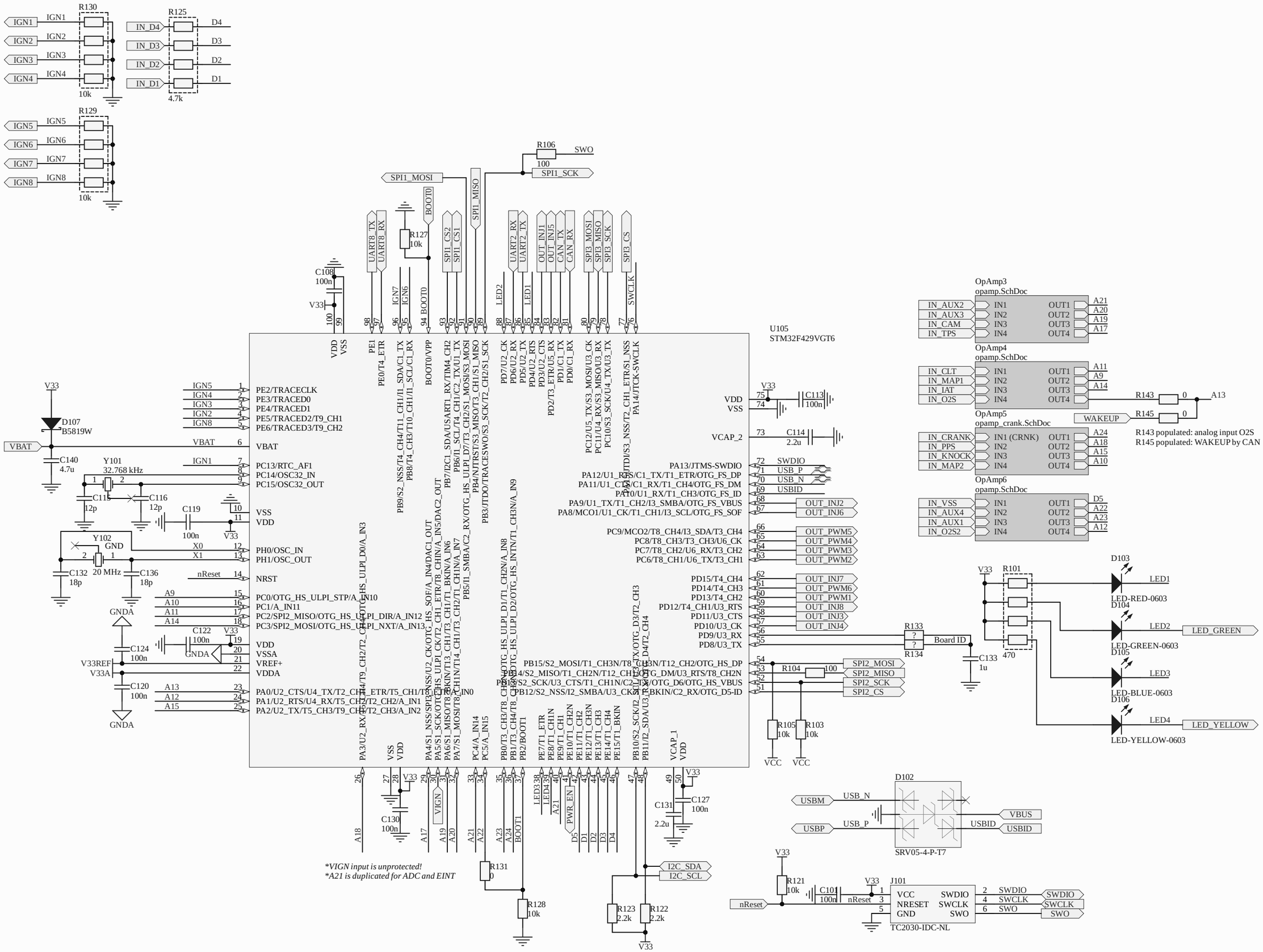
R130
IGN1
IGN2
IGN3
IGN4
10k
R125
IN_D4
IN_D3
IN_D2
IN_D1
D4
D3
D2
D1
4.7k
R129
IGN5
IGN6
IGN7
IGN8
10k
R106
SWO
100
SPI1_SCK
SPI1_MOSI
SPI1_MISO
BOOT0
R127
10k
C108
100n
V33
UART8_TX
UART8_RX
SPI1_CS2
SPI1_CS1
UART2_RX
UART2_TX
OUT_INJ1
OUT_INJ5
CAN_TX
CAN_RX
SPI3_MOSI
SPI3_MISO
SPI3_SCK
SPI3_CS
SWCLK
LED2
LED1
IGN7
IGN6
BOOT0
U105
STM32F429VGT6
VDD
VSS
PE1
PE0/T4_ETR
BOOT0/VPP
PD7/U2_CK
PD6/U2_RX
PD5/U2_TX
PD4/U2_RTS
PD3/U2_CTS
PD2/T3_ETR/U5_RX
PD1/C1_TX
PD0/C1_RX
PC12/U5_TX/S3_MOSI/U3_CK
PC11/U4_RX/S3_MISO/U3_RX
PC10/S3_SCK/U4_TX/U3_TX
PA14/JTCK-SWCLK
PA13/JTMS-SWDIO
PA12/U1_RTS/C1_TX/T1_ETR/OTG_FS_DP
PA11/U1_CTS/C1_RX/T1_CH4/OTG_FS_DM
PA10/U1_RX/T1_CH3/OTG_FS_ID
PA9/U1_TX/T1_CH2/I3_SMBA/OTG_FS_VBUS
PA8/MCO1/U1_CK/T1_CH1/I3_SCL/OTG_FS_SOF
PC9/MCO2/T8_CH4/I3_SDA/T3_CH4
PC8/T8_CH3/T3_CH3/U6_CK
PC7/T8_CH2/U6_RX/T3_CH2
PC6/T8_CH1/U6_TX/T3_CH1
PD15/T4_CH4
PD14/T4_CH3
PD13/T4_CH2
PD12/T4_CH1/U3_RTS
PD11/U3_CTS
PD10/U3_CK
PD9/U3_RX
PD8/U3_TX
PB15/S2_MOSI/T1_CH3N/T8_CH3N
PB14/S2_MISO/T1_CH2N/T12_CH1/OTG_DM/U3_RTS/T8_CH2N
PB13/S2_SCK/U3_CTS/T1_CH1N/C2_TX/OTG_D6/OTG_HS_VBUS
PB12/S2_NSS/I2_SMBA/U3_CK/T1_BKIN/C2_RX/OTG_D5-ID
PB9/S2_NSS/T4_CH4/T11_CH1/I1_SDA/C1_TX
PB8/T4_CH3/T10_CH1/I1_SCL/C1_RX
PB7/I2C1_SDA/USART1_RX/TIM4_CH2
PB6/I1_SCL/T4_CH1/C2_TX/U1_TX
PB5/I1_SMBA/C2_RX/OTG_HS_ULPI_D7/T3_CH2/S1_MOSI/S3_MOSI
PB4/NJTRST/S3_MISO/T3_CH1/S1_MISO
PB3/JTDO/TRACESWO/S3_SCK/T2_CH2/S1_SCK
PA15/JTDI/S3_NSS/T2_CH1_ETR/S1_NSS
PA3/U2_RX/T5_CH4/T9_CH2/T2_CH4/OTG_HS_ULPI_D0/A_IN3
PA4/S1_NSS/SPI3_NSS/U2_CK/OTG_HS_SOF/A_IN4/DAC1_OUT
PA5/S1_SCK/OTG_HS_ULPI_CK/T2_CH1_ETR/T8_CH1N/A_IN5/DAC2_OUT
PA6/S1_MISO/T8_BKIN/T13_CH1/T3_CH1/T1_BKIN/A_IN6
PA7/S1_MOSI/T8_CH1N/T14_CH1/T3_CH2/T1_CH1N/A_IN7
PC4/A_IN14
PC5/A_IN15
PB0/T3_CH3/T8_CH2N/OTG_HS_ULPI_D1/T1_CH2N/A_IN8
PB1/T3_CH4/T8_CH3N/OTG_HS_ULPI_D2/OTG_HS_INTN/T1_CH3N/A_IN9
PB2/BOOT1
PE7/T1_ETR
PE8/T1_CH1N
PE9/T1_CH1
PE10/T1_CH2N
PE11/T1_CH2
PE12/T1_CH3N
PE13/T1_CH3
PE14/T1_CH4
PE15/T1_BKIN
PB10/S2_SCK/I2_SCL/OTG_HS_ULPI_D3/T2_CH3
PB11/I2_SDA/U3_RX/OTG_HS_ULPI_D4/T2_CH4
VCAP_1
VDD
IGN5
IGN4
IGN3
IGN2
IGN8
IGN1
PE2/TRACECLK
PE3/TRACED0
PE4/TRACED1
PE5/TRACED2/T9_CH1
PE6/TRACED3/T9_CH2
VBAT
PC13/RTC_AF1
PC14/OSC32_IN
PC15/OSC32_OUT
VSS
VDD
PH0/OSC_IN
PH1/OSC_OUT
nReset
NRST
A9
A10
A11
A14
PC0/OTG_HS_ULPI_STP/A_IN10
PC1/A_IN11
PC2/SPI2_MISO/OTG_HS_ULPI_DIR/A_IN12
PC3/SPI2_MOSI/OTG_HS_ULPI_NXT/A_IN13
VDD
VSSA
VREF+
VDDA
A13
A12
A15
PA0/U2_CTS/U4_TX/T2_CH1_ETR/T5_CH1/I8_CH1/A_IN0
PA1/U2_RTS/U4_RX/T5_CH2/T2_CH2/A_IN1
PA2/U2_TX/T5_CH3/T9_CH1/T2_CH3/A_IN2
VDD
VSS
VCAP_2
PA13/JTMS-SWDIO
PA12/U1_RTS/C1_TX/T1_ETR/OTG_FS_DP
PA11/U1_CTS/C1_RX/T1_CH4/OTG_FS_DM
PA10/U1_RX/T1_CH3/OTG_FS_ID
PA9/U1_TX/T1_CH2/I3_SMBA/OTG_FS_VBUS
PA8/MCO1/U1_CK/T1_CH1/I3_SCL/OTG_FS_SOF
PC9/MCO2/T8_CH4/I3_SDA/T3_CH4
PC8/T8_CH3/T3_CH3/U6_CK
PC7/T8_CH2/U6_RX/T3_CH2
PC6/T8_CH1/U6_TX/T3_CH1
PD15/T4_CH4
PD14/T4_CH3
PD13/T4_CH2
PD12/T4_CH1/U3_RTS
PD11/U3_CTS
PD10/U3_CK
PD9/U3_RX
PD8/U3_TX
PB15/S2_MOSI/T1_CH3N/T8_CH3N
PB14/S2_MISO/T1_CH2N/T12_CH1/OTG_DM/U3_RTS/T8_CH2N
PB13/S2_SCK/U3_CTS/T1_CH1N/C2_TX/OTG_D6/OTG_HS_VBUS
PB12/S2_NSS/I2_SMBA/U3_CK/T1_BKIN/C2_RX/OTG_D5-ID
PB9/S2_NSS/T4_CH4/T11_CH1/I1_SDA/C1_TX
PB8/T4_CH3/T10_CH1/I1_SCL/C1_RX
PB7/I2C1_SDA/USART1_RX/TIM4_CH2
PB6/I1_SCL/T4_CH1/C2_TX/U1_TX
PB5/I1_SMBA/C2_RX/OTG_HS_ULPI_D7/T3_CH2/S1_MOSI/S3_MOSI
PB4/NJTRST/S3_MISO/T3_CH1/S1_MISO
PB3/JTDO/TRACESWO/S3_SCK/T2_CH2/S1_SCK
PA15/JTDI/S3_NSS/T2_CH1_ETR/S1_NSS
PA14/JTCK-SWCLK
PA3/U2_RX/T5_CH4/T9_CH2/T2_CH4/OTG_HS_ULPI_D0/A_IN3
PA4/S1_NSS/SPI3_NSS/U2_CK/OTG_HS_SOF/A_IN4/DAC1_OUT
PA5/S1_SCK/OTG_HS_ULPI_CK/T2_CH1_ETR/T8_CH1N/A_IN5/DAC2_OUT
PA6/S1_MISO/T8_BKIN/T13_CH1/T3_CH1/T1_BKIN/A_IN6
PA7/S1_MOSI/T8_CH1N/T14_CH1/T3_CH2/T1_CH1N/A_IN7
PC4/A_IN14
PC5/A_IN15
PB0/T3_CH3/T8_CH2N/OTG_HS_ULPI_D1/T1_CH2N/A_IN8
PB1/T3_CH4/T8_CH3N/OTG_HS_ULPI_D2/OTG_HS_INTN/T1_CH3N/A_IN9
PB2/BOOT1
PE7/T1_ETR
PE8/T1_CH1N
PE9/T1_CH1
PE10/T1_CH2N
PE11/T1_CH2
PE12/T1_CH3N
PE13/T1_CH3
PE14/T1_CH4
PE15/T1_BKIN
PB10/S2_SCK/I2_SCL/OTG_HS_ULPI_D3/T2_CH3
PB11/I2_SDA/U3_RX/OTG_HS_ULPI_D4/T2_CH4
VCAP_1
VDD
VBAT
D107
B5819W
C140
4.7u
Y101
32.768 kHz
C115
12p
C116
12p
C119
100n
Y102
20 MHz
C132
18p
C136
18p
C124
100n
C122
100n
C120
100n
GNDA
V33A
V33REF
C113
100n
C114
2.2u
SWDIO
USB_P
USB_N
USBID
OUT_INJ2
OUT_INJ6
OUT_PWM5
OUT_PWM4
OUT_PWM3
OUT_PWM2
OUT_INJ7
OUT_PWM6
OUT_PWM1
OUT_INJ8
OUT_INJ3
OUT_INJ4
R133
R134
Board ID
C133
1u
R104
100
SPI2_MOSI
SPI2_MISO
SPI2_SCK
SPI2_CS
R105
10k
R103
10k
VCC
R101
470
D103
LED1
LED-RED-0603
D104
LED2
LED-GREEN-0603
LED_GREEN
D105
LED3
LED-BLUE-0603
D106
LED4
LED-YELLOW-0603
LED_YELLOW
OpAmp3
opamp.SchDoc
IN_AUX2
IN_AUX3
IN_CAM
IN_TPS
IN1
IN2
IN3
IN4
OUT1
OUT2
OUT3
OUT4
A21
A20
A19
A17
OpAmp4
opamp.SchDoc
IN_CLT
IN_MAP1
IN_IAT
IN_O2S
A11
A9
A14
R143
0
A13
WAKEUP
R145
0
OpAmp5
opamp_crank.SchDoc
IN_CRANK
IN_PPS
IN_KNOCK
IN_MAP2
IN1 (CRNK)
A24
A18
A15
A10
R143 populated: analog input O2S
R145 populated: WAKEUP by CAN
OpAmp6
opamp.SchDoc
IN_VSS
IN_AUX4
IN_AUX1
IN_O2S2
D5
A22
A23
A12
D102
USBM
USBP
VBUS
SRV05-4-P-T7
R121
10k
C101
100n
nReset
J101
VCC
NRESET
GND
SWDIO
SWCLK
SWO
TC2030-IDC-NL
R128
10k
R123
2.2k
R122
2.2k
R131
0
C130
100n
C131
2.2u
C127
100n
I2C_SDA
I2C_SCL
VIGN
PWR_EN
*VIGN input is unprotected!
*A21 is duplicated for ADC and EINT

See pullups replacement file for actual values

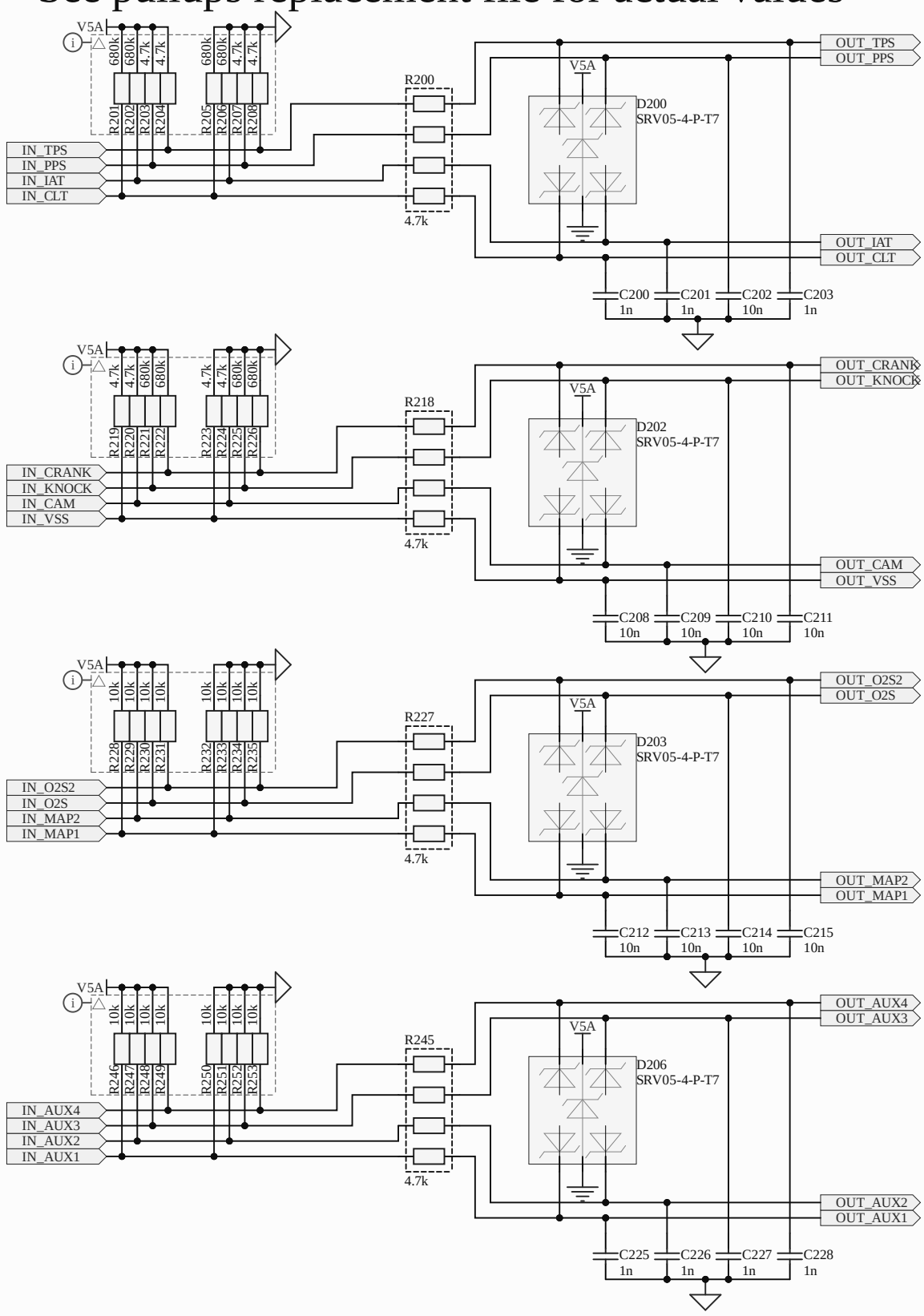

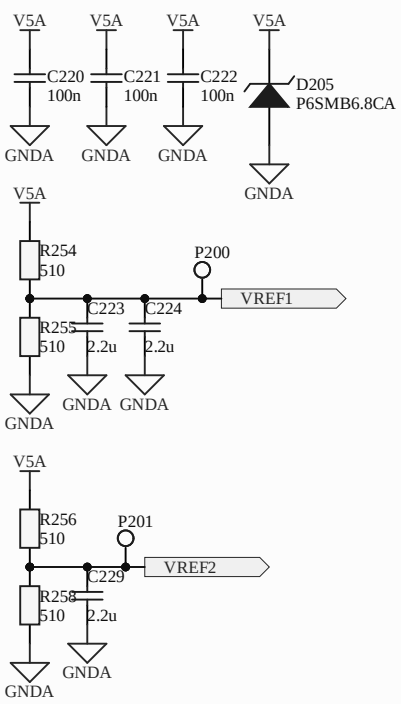

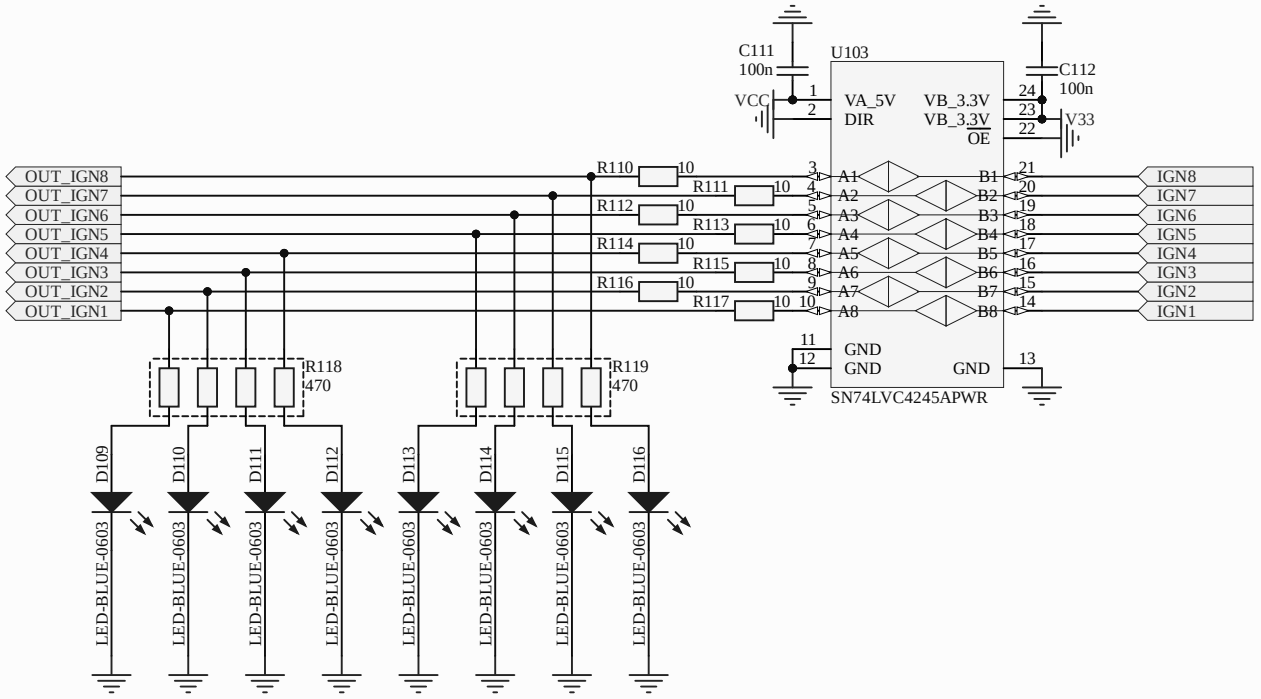
C111
100n
VCC
U103
VA_5V
DIR
VB_3.3V
VB_3.3V
OE
C112
100n
V33
GND
GND
GND
SN74LVC4245APWR
OUT_IGN8
OUT_IGN7
OUT_IGN6
OUT_IGN5
OUT_IGN4
OUT_IGN3
OUT_IGN2
OUT_IGN1
R110
R111
R112
R113
R114
R115
R116
R117
R118
470
R119
470
A1
A2
A3
A4
A5
A6
A7
A8
B1
B2
B3
B4
B5
B6
B7
B8
IGN8
IGN7
IGN6
IGN5
IGN4
IGN3
IGN2
IGN1
D109
D110
D111
D112
D113
D114
D115
D116
LED-BLUE-0603

See pullups replacement file for actual values

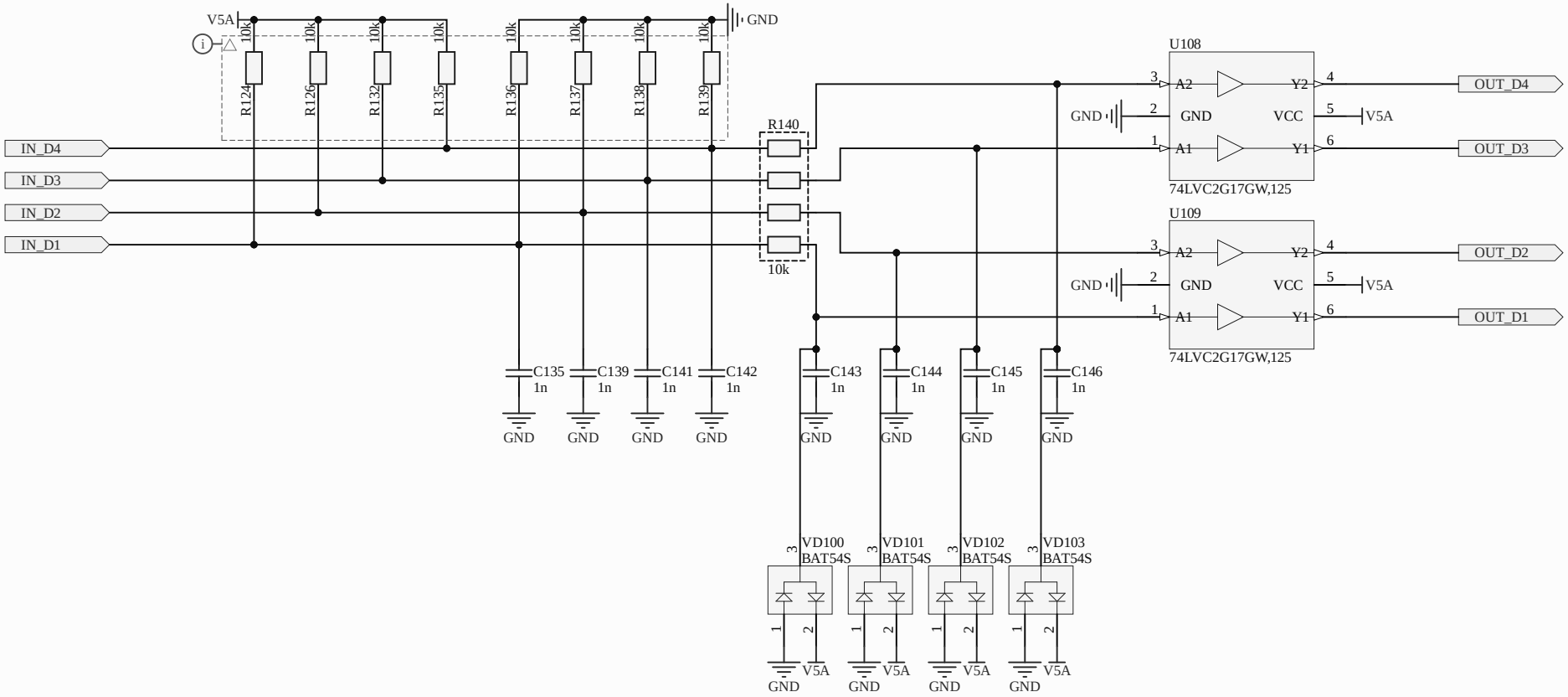

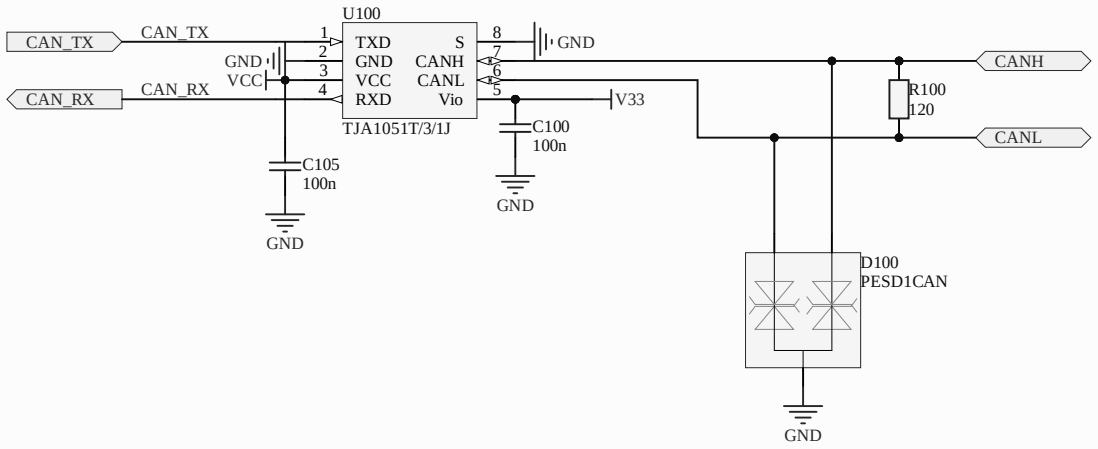
U100
CAN_TX
CAN_TX
CAN_RX
CAN_RX
GND
VCC
1
2
3
4
TXD
GND
VCC
RXD
S
CANH
CANL
Vio
8
7
6
5
GND
V33
CANH
CANL
R100
120
C105
100n
C100
100n
TJA1051T/3/1J
D100
PESD1CAN
GND
GND
GND

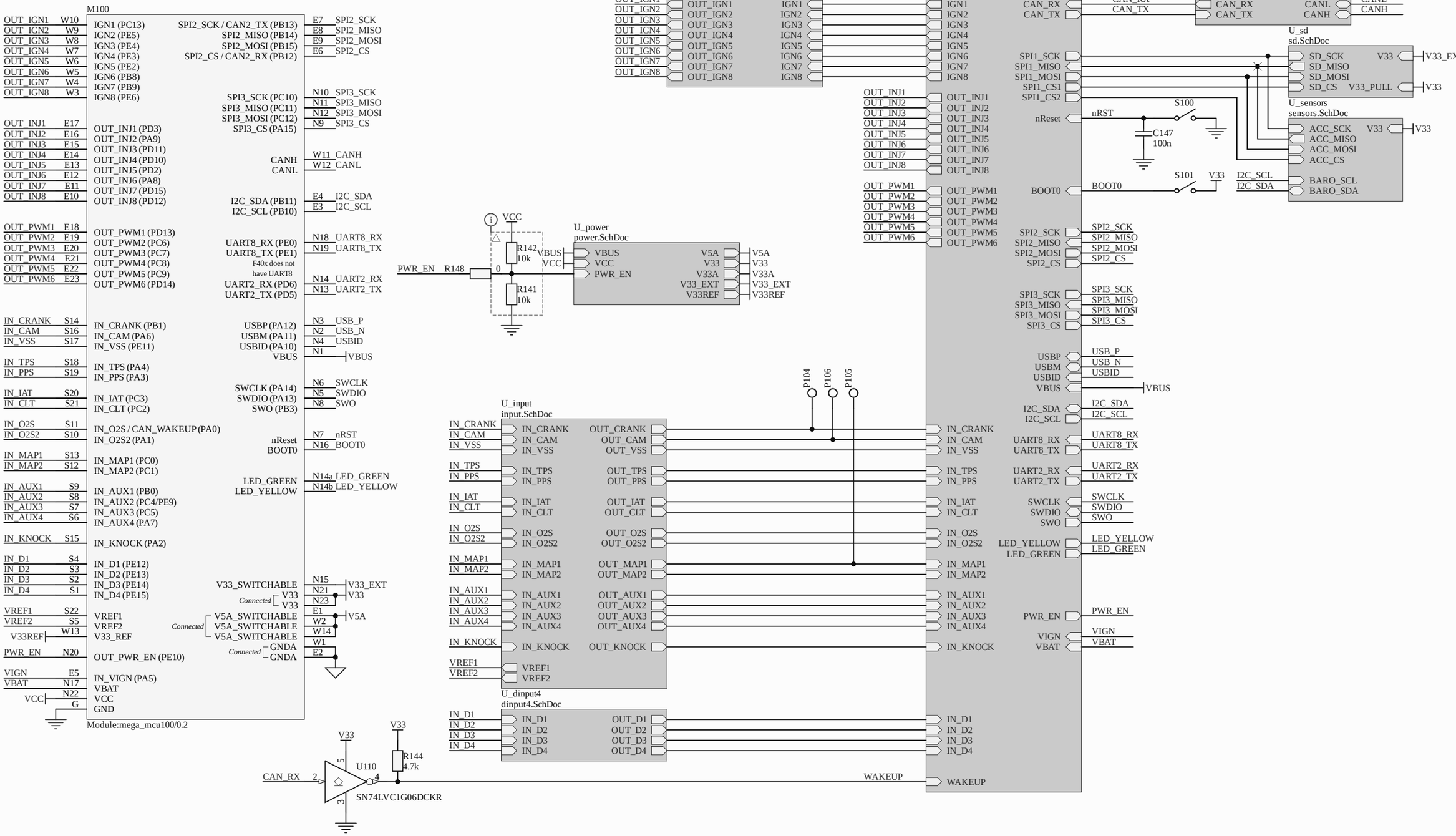
M100
OUT_IGN1 W10
OUT_IGN2 W9
OUT_IGN3 W8
OUT_IGN4 W7
OUT_IGN5 W6
OUT_IGN6 W5
OUT_IGN7 W4
OUT_IGN8 W3
IGN1 (PC13)
IGN2 (PE5)
IGN3 (PE4)
IGN4 (PE3)
IGN5 (PE2)
IGN6 (PB8)
IGN7 (PB9)
IGN8 (PE6)
SPI2_SCK / CAN2_TX (PB13) E7 SPI2_SCK
SPI2_MISO (PB14) E8 SPI2_MISO
SPI2_MOSI (PB15) E9 SPI2_MOSI
SPI2_CS / CAN2_RX (PB12) E6 SPI2_CS
SPI3_SCK (PC10) N10 SPI3_SCK
SPI3_MISO (PC11) N11 SPI3_MISO
SPI3_MOSI (PC12) N12 SPI3_MOSI
SPI3_CS (PA15) N9 SPI3_CS
OUT_INJ1 E17
OUT_INJ2 E16
OUT_INJ3 E15
OUT_INJ4 E14
OUT_INJ5 E13
OUT_INJ6 E12
OUT_INJ7 E11
OUT_INJ8 E10
OUT_INJ1 (PD3)
OUT_INJ2 (PA9)
OUT_INJ3 (PD11)
OUT_INJ4 (PD10)
OUT_INJ5 (PD2)
OUT_INJ6 (PA8)
OUT_INJ7 (PD15)
OUT_INJ8 (PD12)
CANH W11 CANH
CANL W12 CANL
I2C_SDA (PB11) E4 I2C_SDA
I2C_SCL (PB10) E3 I2C_SCL
OUT_PWM1 E18
OUT_PWM2 E19
OUT_PWM3 E20
OUT_PWM4 E21
OUT_PWM5 E22
OUT_PWM6 E23
OUT_PWM1 (PD13)
OUT_PWM2 (PC6)
OUT_PWM3 (PC7)
OUT_PWM4 (PC8)
OUT_PWM5 (PC9)
OUT_PWM6 (PD14)
UART8_RX (PE0) N18 UART8_RX
UART8_TX (PE1) N19 UART8_TX
F40x does not have UART8
UART2_RX (PD6) N14 UART2_RX
UART2_TX (PD5) N13 UART2_TX
IN_CRANK S14
IN_CAM S16
IN_VSS S17
IN_CRANK (PB1)
IN_CAM (PA6)
IN_VSS (PE11)
USBP (PA12) N3 USB_P
USBM (PA11) N2 USB_N
USBID (PA10) N4 USBID
VBUS N1 VBUS
IN_TPS S18
IN_PPS S19
IN_TPS (PA4)
IN_PPS (PA3)
IN_IAT S20
IN_CLT S21
IN_IAT (PC3)
IN_CLT (PC2)
SWCLK (PA14) N6 SWCLK
SWDIO (PA13) N5 SWDIO
SWO (PB3) N8 SWO
IN_O2S S11
IN_O2S2 S10
IN_O2S / CAN_WAKEUP (PA0)
IN_O2S2 (PA1)
nReset N7 nRST
BOOT0 N16 BOOT0
IN_MAP1 S13
IN_MAP2 S12
IN_MAP1 (PC0)
IN_MAP2 (PC1)
LED_GREEN N14a LED_GREEN
LED_YELLOW N14b LED_YELLOW
IN_AUX1 S9
IN_AUX2 S8
IN_AUX3 S7
IN_AUX4 S6
IN_AUX1 (PB0)
IN_AUX2 (PC4/PE9)
IN_AUX3 (PC5)
IN_AUX4 (PA7)
IN_KNOCK S15
IN_KNOCK (PA2)
IN_D1 S4
IN_D2 S3
IN_D3 S2
IN_D4 S1
IN_D1 (PE12)
IN_D2 (PE13)
IN_D3 (PE14)
IN_D4 (PE15)
V33_SWITCHABLE N15 V33_EXT
Connected V33 N21 V33
V33 N23
V33 E1
VREF1 S22
VREF2 S5
V33REF W13
Connected V5A_SWITCHABLE W2 V5A
V5A_SWITCHABLE W14
V33_REF
Connected GNDA W1
GNDA E2
PWR_EN N20
OUT_PWR_EN (PE10)
VIGN E5
VBAT N17
VCC N22
G
IN_VIGN (PA5)
VBAT
VCC
GND
Module:mega_mcu100/0.2
U_ign8
ign8.SchDoc
OUT_IGN1 OUT_IGN1 IGN1
OUT_IGN2 OUT_IGN2 IGN2
OUT_IGN3 OUT_IGN3 IGN3
OUT_IGN4 OUT_IGN4 IGN4
OUT_IGN5 OUT_IGN5 IGN5
OUT_IGN6 OUT_IGN6 IGN6
OUT_IGN7 OUT_IGN7 IGN7
OUT_IGN8 OUT_IGN8 IGN8
U_mcu
mcu.SchDoc
IGN1 IGN2 IGN3 IGN4 IGN5 IGN6 IGN7 IGN8
OUT_INJ1 OUT_INJ2 OUT_INJ3 OUT_INJ4 OUT_INJ5 OUT_INJ6 OUT_INJ7 OUT_INJ8
OUT_PWM1 OUT_PWM2 OUT_PWM3 OUT_PWM4 OUT_PWM5 OUT_PWM6
CAN_RX CAN_TX
SPI1_SCK SPI1_MISO SPI1_MOSI SPI1_CS1 SPI1_CS2
nReset
BOOT0
SPI2_SCK SPI2_MISO SPI2_MOSI SPI2_CS
SPI3_SCK SPI3_MISO SPI3_MOSI SPI3_CS
USBP USBM USBID VBUS
I2C_SDA I2C_SCL
UART8_RX UART8_TX
UART2_RX UART2_TX
SWCLK SWDIO SWO
LED_YELLOW LED_GREEN
PWR_EN
VIGN VBAT
IN_CRANK IN_CAM IN_VSS
IN_TPS IN_PPS
IN_IAT IN_CLT
IN_O2S IN_O2S2
IN_MAP1 IN_MAP2
IN_AUX1 IN_AUX2 IN_AUX3 IN_AUX4
IN_KNOCK
WAKEUP
U_can
can.SchDoc
CAN_RX CAN_TX CANL CANH
U_sd
sd.SchDoc
SD_SCK SD_MISO SD_MOSI SD_CS V33 V33_PULL
U_sensors
sensors.SchDoc
ACC_SCK ACC_MISO ACC_MOSI ACC_CS V33
BARO_SCL BARO_SDA
S100
C147 100n
S101 V33
U_power
power.SchDoc
VCC
R142 10k
R141 10k
VBUS
PWR_EN R148 0
VBUS VCC PWR_EN
V5A V33 V33A V33_EXT V33REF
P104 P106 P105
U_input
input.SchDoc
IN_CRANK IN_CAM IN_VSS OUT_CRANK OUT_CAM OUT_VSS
IN_TPS IN_PPS OUT_TPS OUT_PPS
IN_IAT IN_CLT OUT_IAT OUT_CLT
IN_O2S IN_O2S2 OUT_O2S OUT_O2S2
IN_MAP1 IN_MAP2 OUT_MAP1 OUT_MAP2
IN_AUX1 IN_AUX2 IN_AUX3 IN_AUX4 OUT_AUX1 OUT_AUX2 OUT_AUX3 OUT_AUX4
IN_KNOCK OUT_KNOCK
VREF1 VREF2
U_dinput4
dinput4.SchDoc
IN_D1 IN_D2 IN_D3 IN_D4 OUT_D1 OUT_D2 OUT_D3 OUT_D4
V33
R144 4.7k
U110
CAN_RX 2
4
5
3
SN74LVC1G06DCKR
WAKEUP

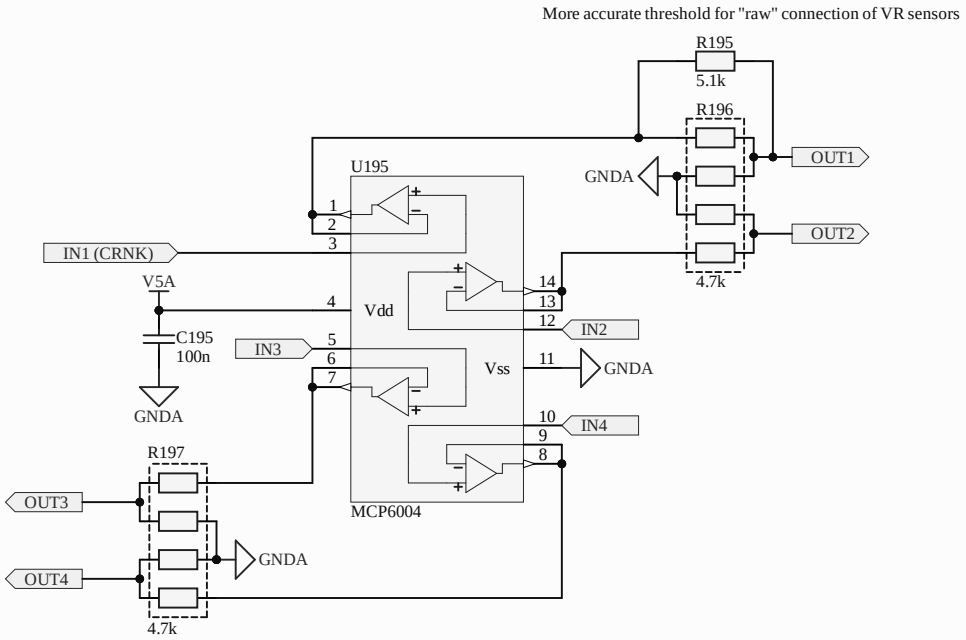
More accurate threshold for "raw" connection of VR sensors
R195
5.1k
R196
OUT1
GNDA
OUT2
4.7k
U195
1
2
3
IN1 (CRNK)
V5A
4
Vdd
14
13
12
IN2
C195
100n
IN3
5
6
7
Vss
11
GNDA
GNDA
10
IN4
9
8
R197
OUT3
OUT4
GNDA
4.7k
MCP6004

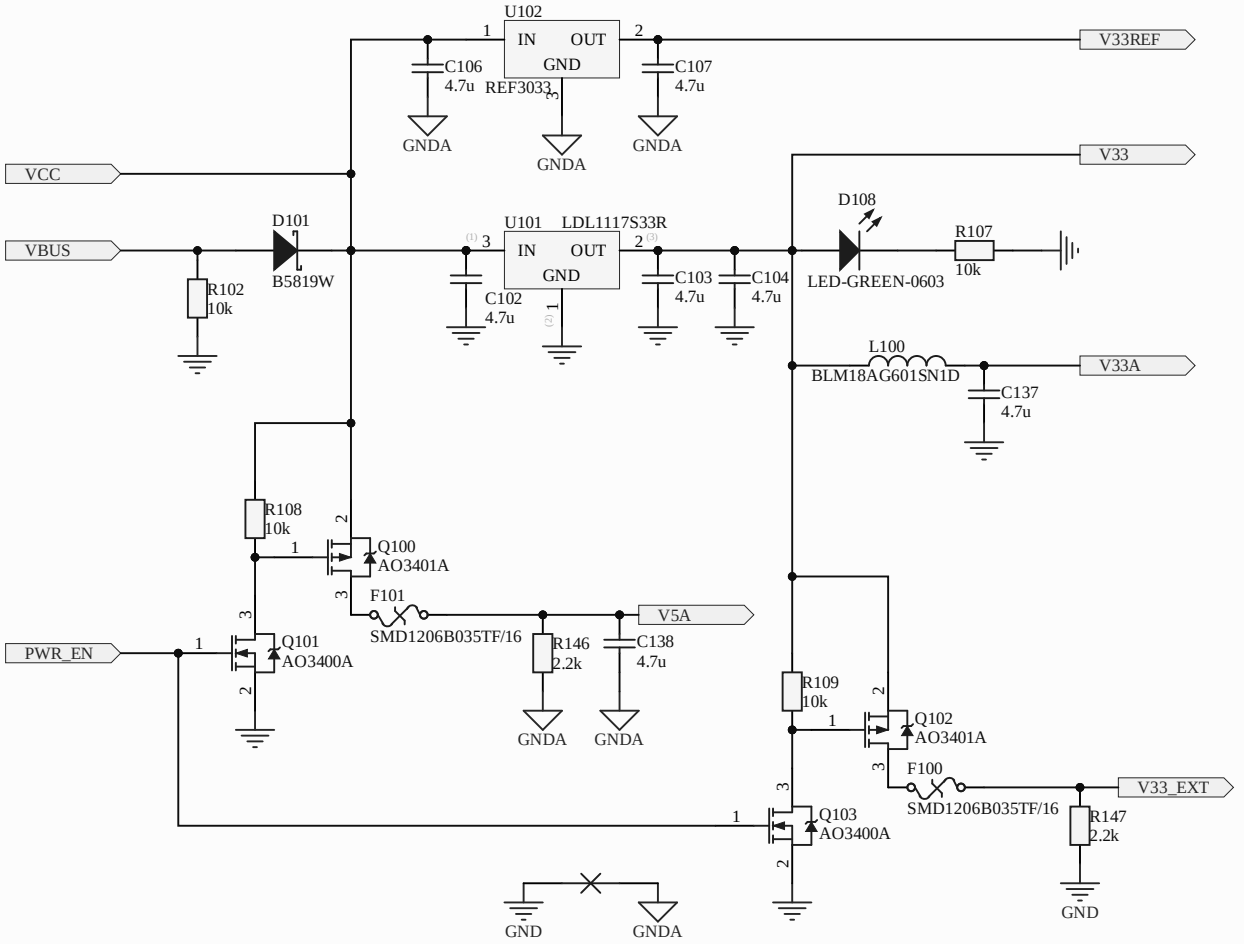

Title		
Size A4	Number	Revision
Date: 5.03.2025		Sheet of
File: C:\Work\..\power.SchDoc		Drawn By:

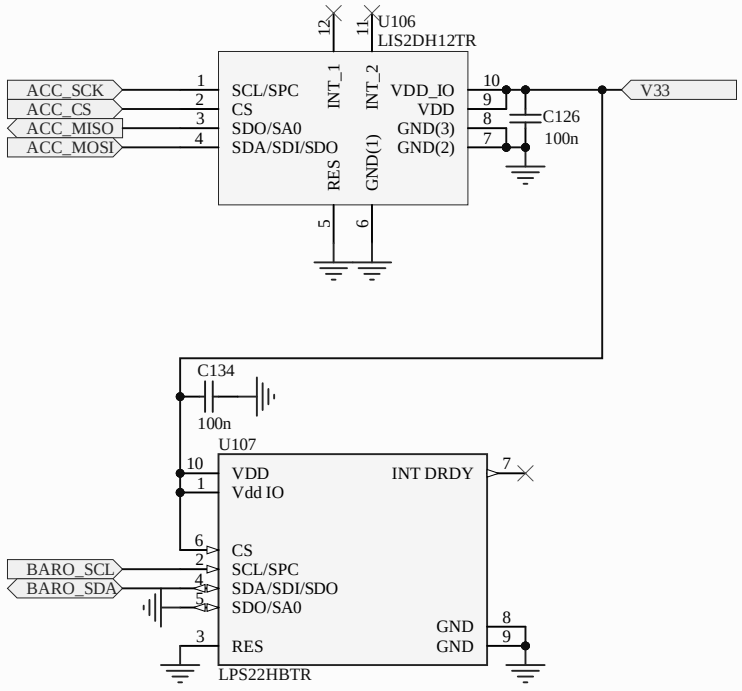
U106
LIS2DH12TR
ACC_SCK
ACC_CS
ACC_MISO
ACC_MOSI
SCL/SPC
CS
SDO/SA0
SDA/SDI/SDO
INT_1
INT_2
RES
GND(1)
VDD_IO
VDD
GND(3)
GND(2)
C126
100n
V33
C134
100n
U107
VDD
Vdd IO
INT DRDY
CS
SCL/SPC
SDA/SDI/SDO
SDO/SA0
RES
GND
GND
BARO_SCL
BARO_SDA
LPS22HBTR

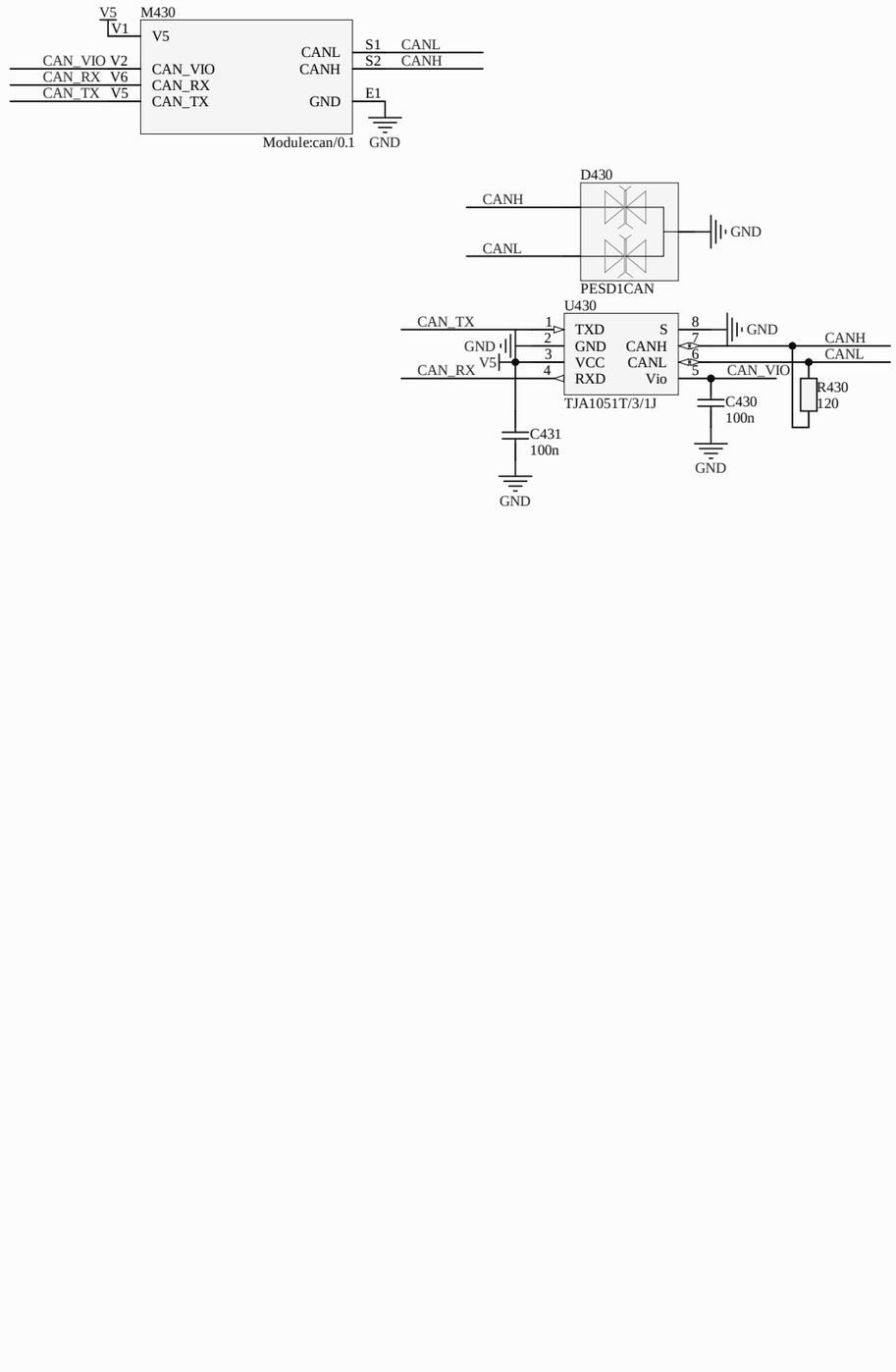

Title: ***Hellen-One CAN***			***rusEFI EMS*** ***Hellen-One Platform*** *https://rusefi.com/s/hellen72*
Size: A3	Author: andreika	Revision: 0.1	
Date: 02.03.2021		Sheet 1 of 1	