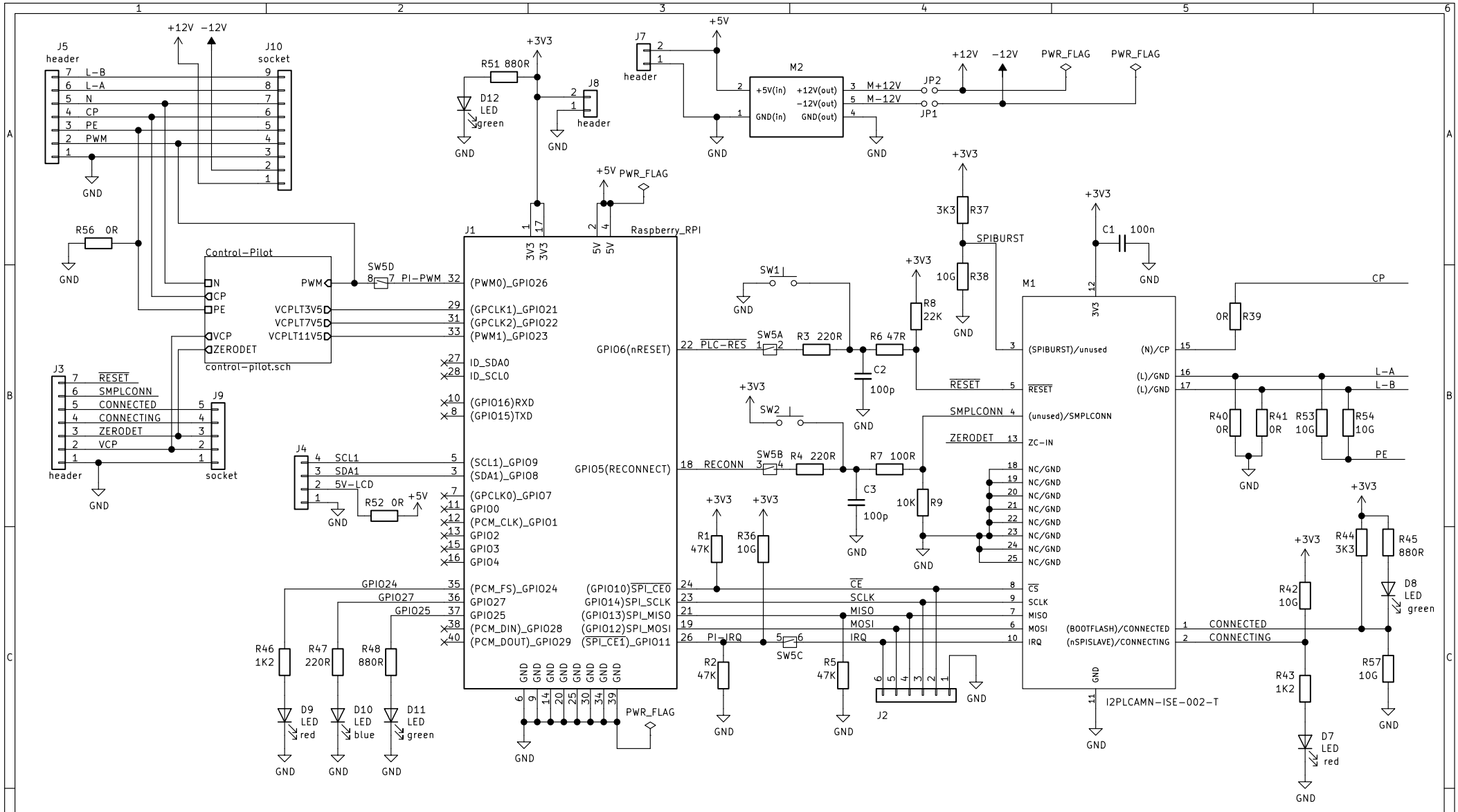

https://github.com/greenenergyprojects/rpi−ev−plc−adapter

(C) Manfred Steiner

Sheet: /

File: rpi−ev−plc−adapter.sch

Title: RPI−EV−PLC Adapter

Size: A4	Date: 2020−02−14	**Rev: V1.0**
KiCad E.D.A. kicad 5.0.2−bee76a070ubuntu18.04.1		Id: 1/2