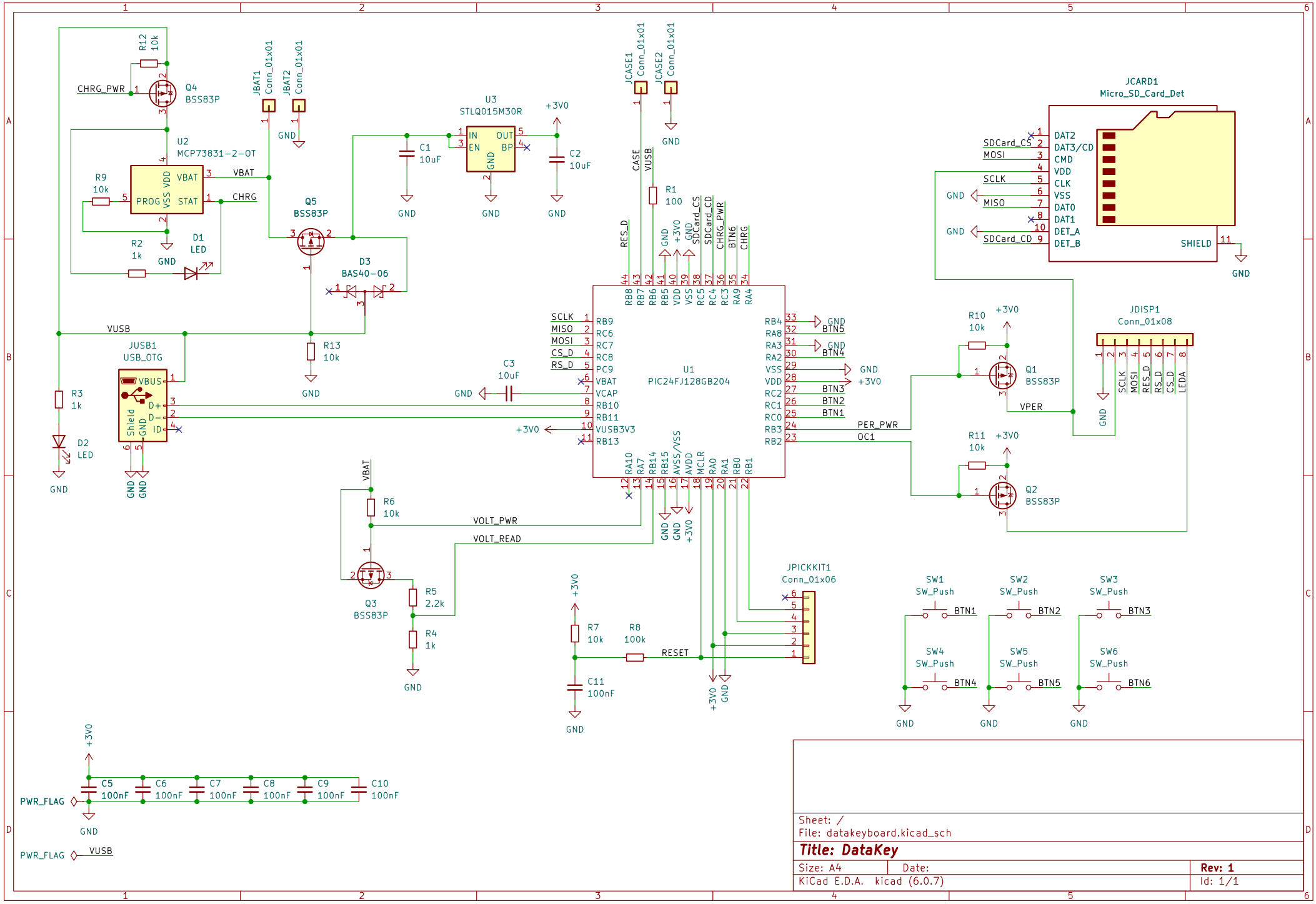
U1
PIC24FJ128GB204
U2
MCP73831-2-OT
U3
STLQ015M30R
JUSB1
USB_OTG
JCARD1
Micro_SD_Card_Det
JDISP1
Conn_01x08
JPICKKIT1
Conn_01x06
Q1
BSS83P
Q2
BSS83P
Q3
BSS83P
Q4
BSS83P
Q5
BSS83P
D1
LED
D2
LED
D3
BAS40-06
SW1
SW_Push
SW2
SW_Push
SW3
SW_Push
SW4
SW_Push
SW5
SW_Push
SW6
SW_Push
JBAT1
Conn_01x01
JBAT2
Conn_01x01
JCASE1
Conn_01x01
JCASE2
Conn_01x01
PWR_FLAG
PWR_FLAG
Sheet: /
File: datakeyboard.kicad_sch
Title: DataKey
Size: A4
Date:
Rev: 1
KiCad E.D.A. kicad (6.0.7)
Id: 1/1