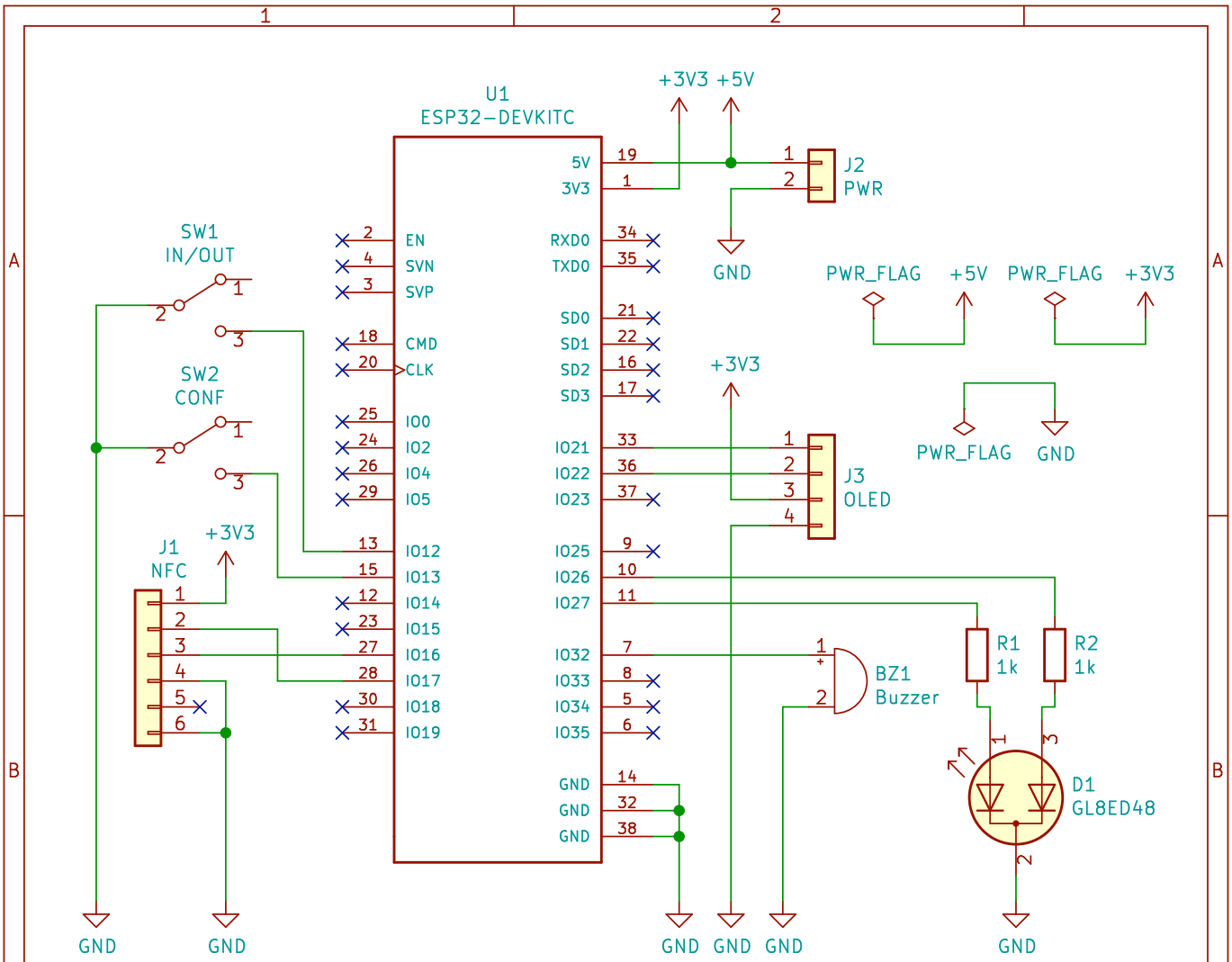

Yakumi-Kobo

Sheet: /
File: CERS.sch

Title: Covid-19 Entrance Recording System

Size: User	Date: 2020-03-17	**Rev: 1.1**
KiCad E.D.A. kicad (5.1.0-0)		Id: 1/1