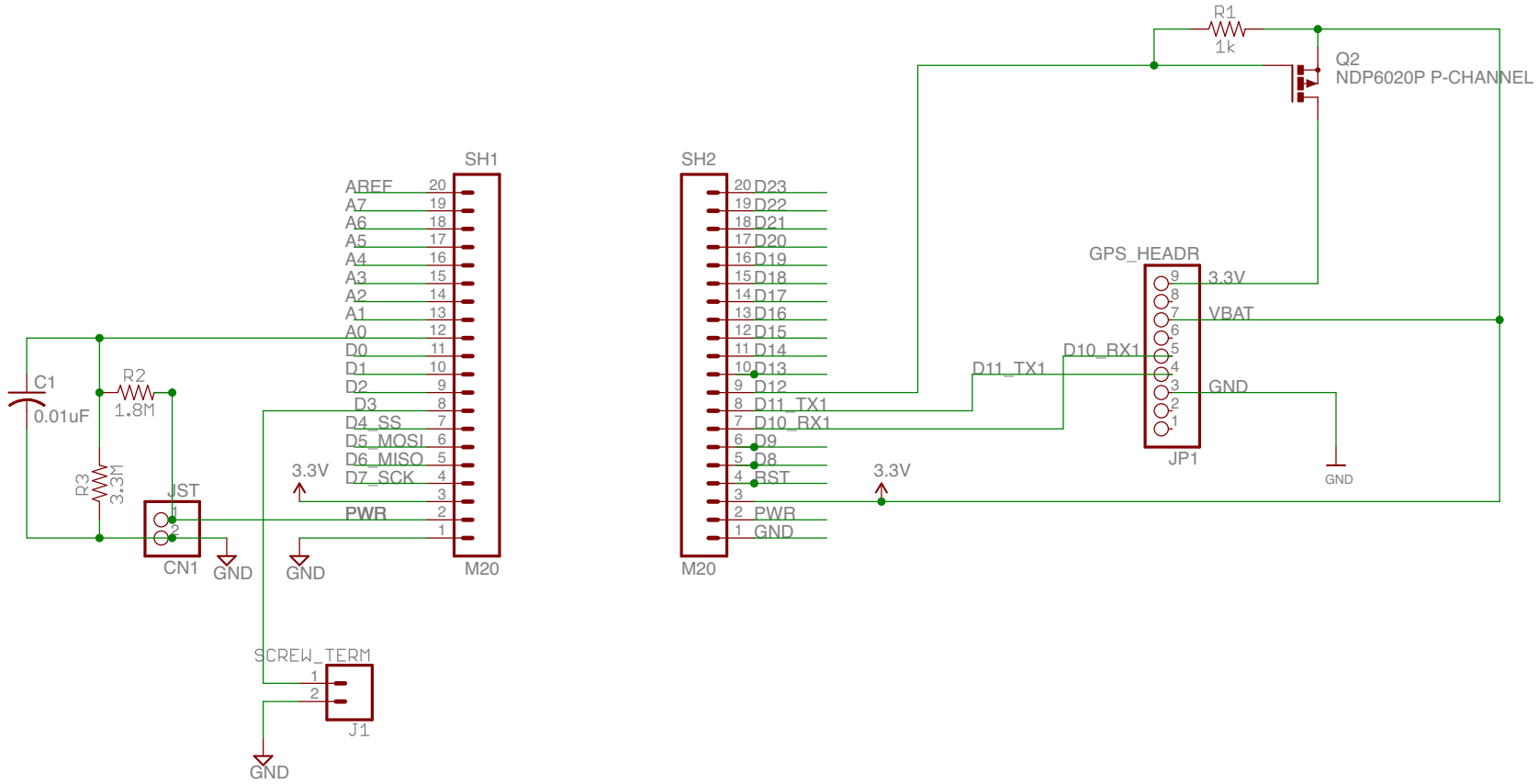

MoteinoMega Ultimate GPS Sheild	
MoteinoMegaGPSSheild	
24/09/2017 15:16	greg.cope@gmail.com
Sheet: 1/1	Rev:0.2