Battery with protection

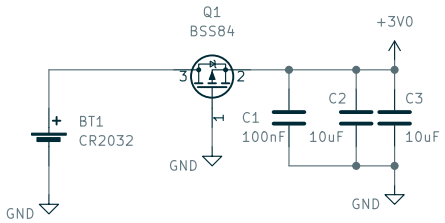

Soil Sensor

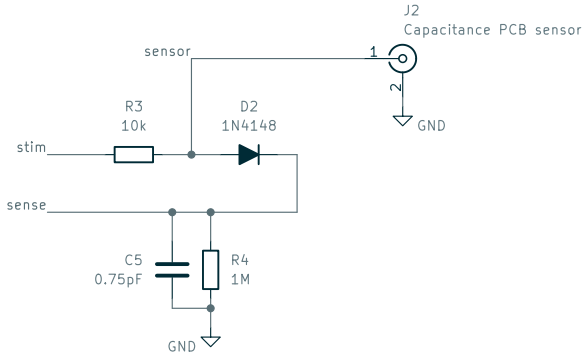

Humidity

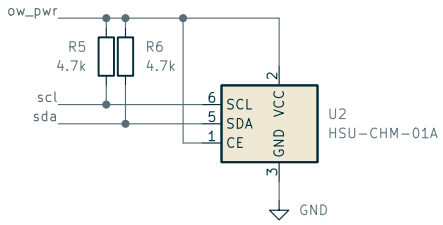

SoC CC2530 based

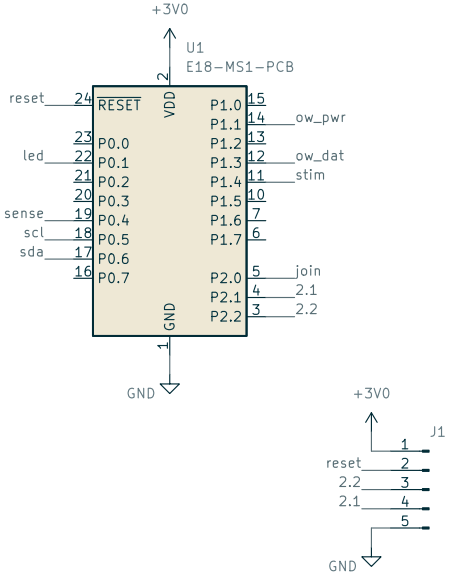

LED/Buttons

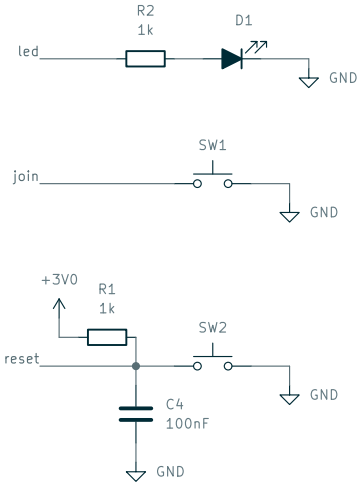

Temperature

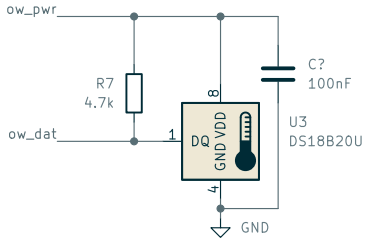

Zigbee based Soil monitor
https://github.com/gregdavill/flower-mon
OSHW: GPL-3.0

Greg Davill <greg.davill@gmail.com>

Sheet: /
File: flower_v2.1.kicad_sch

Title: flower mon

Size: A4	Date: 2022-05-24	**Rev: r2.1**
KiCad E.D.A. kicad (6.0.2)		Id: 1/1