R2D2-Wiring-Diagram--15-Jan-2025-11-34-AM

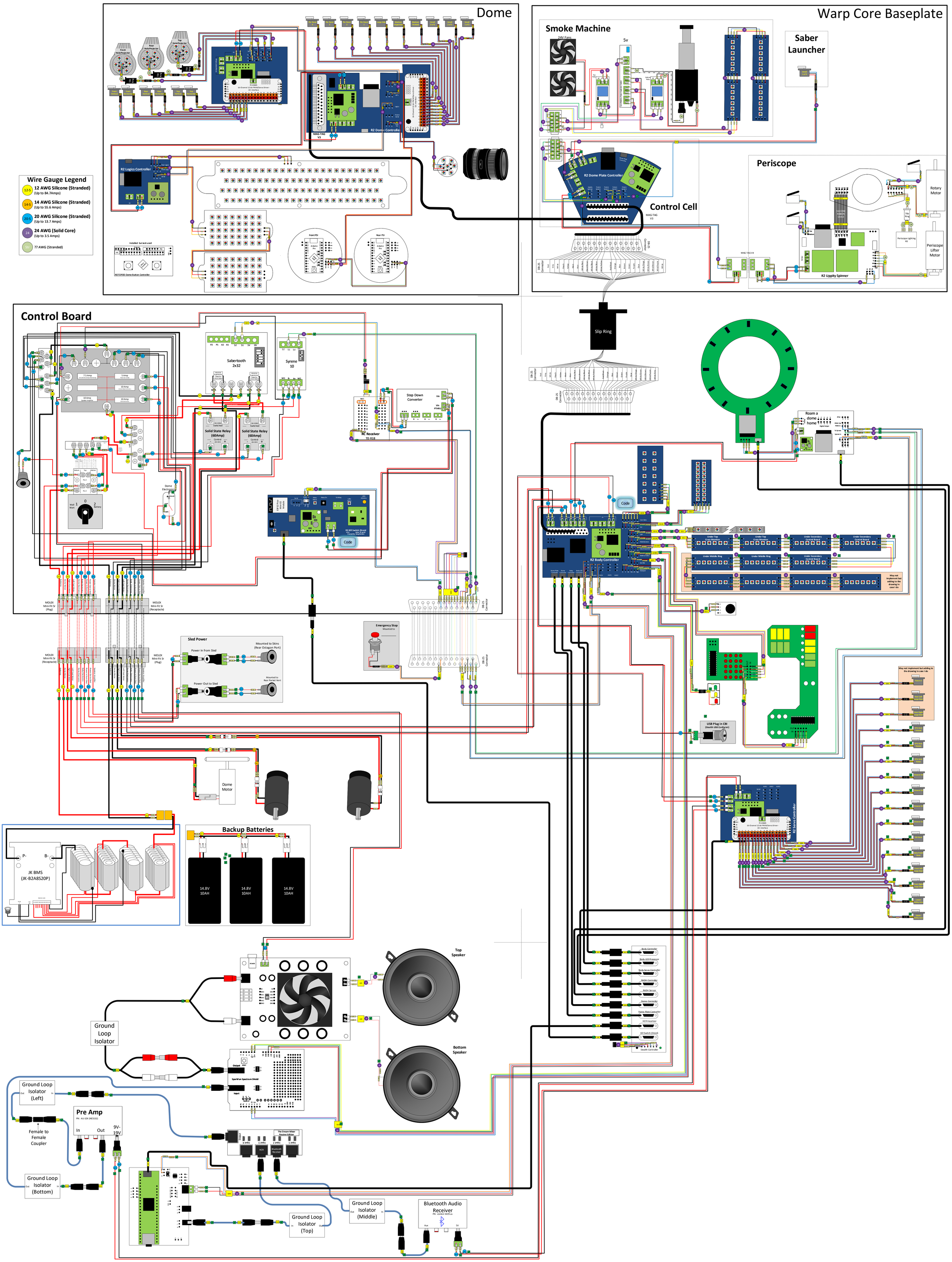

C3P0 Servo Layout

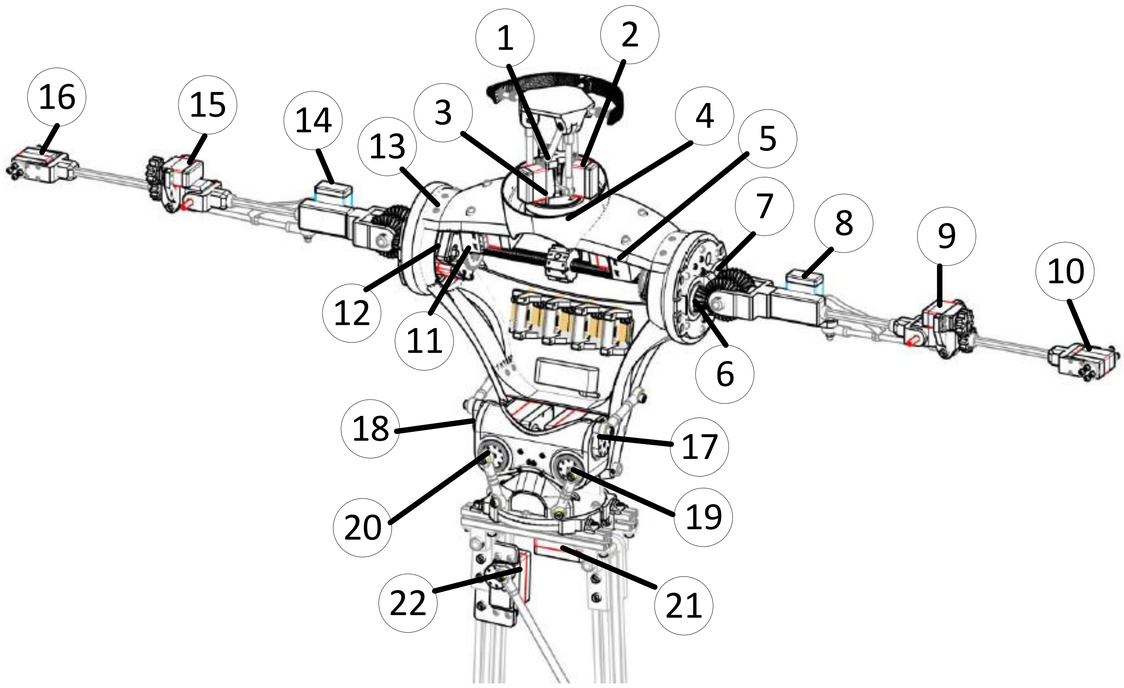

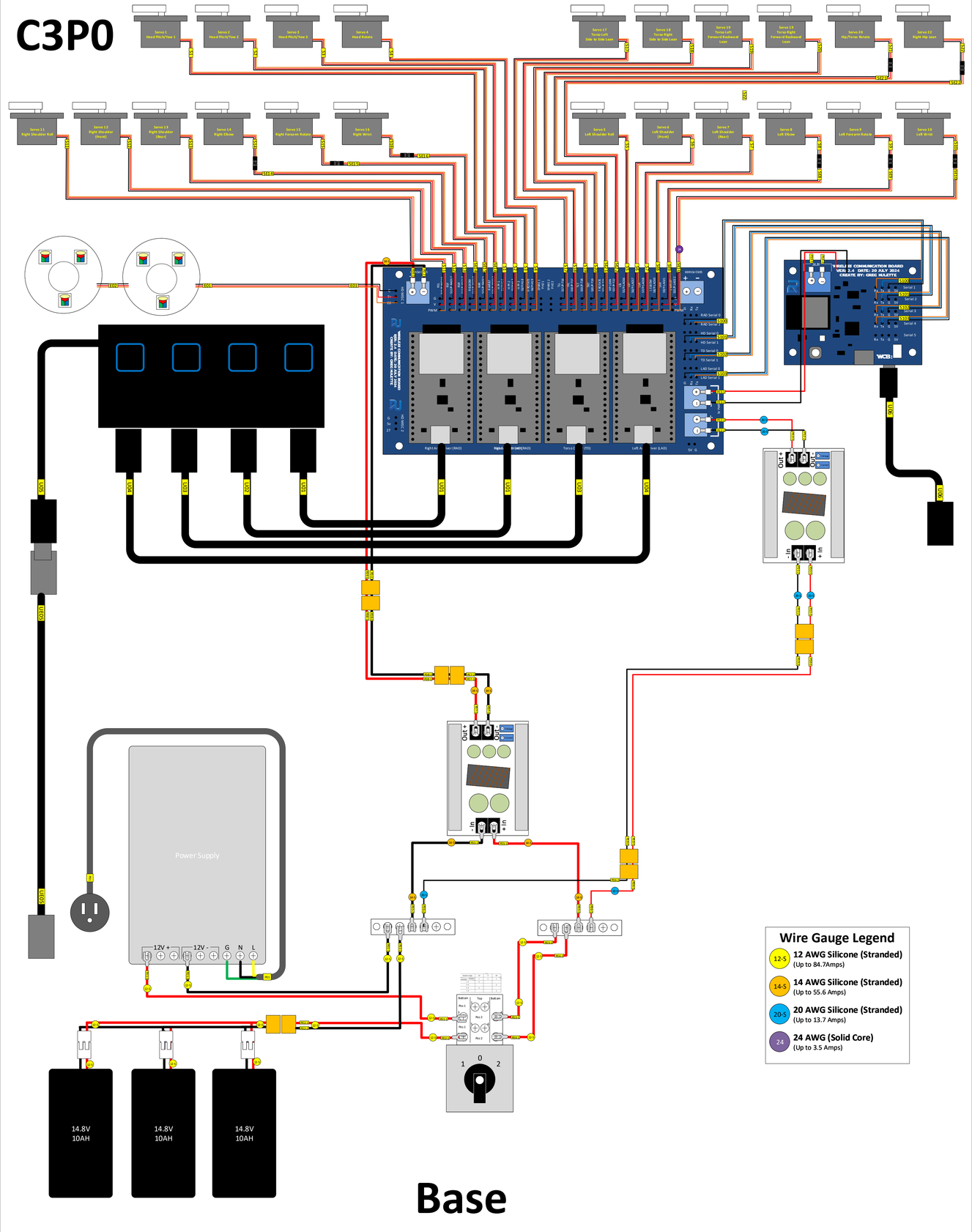

Base

Needs to be verified and Updated

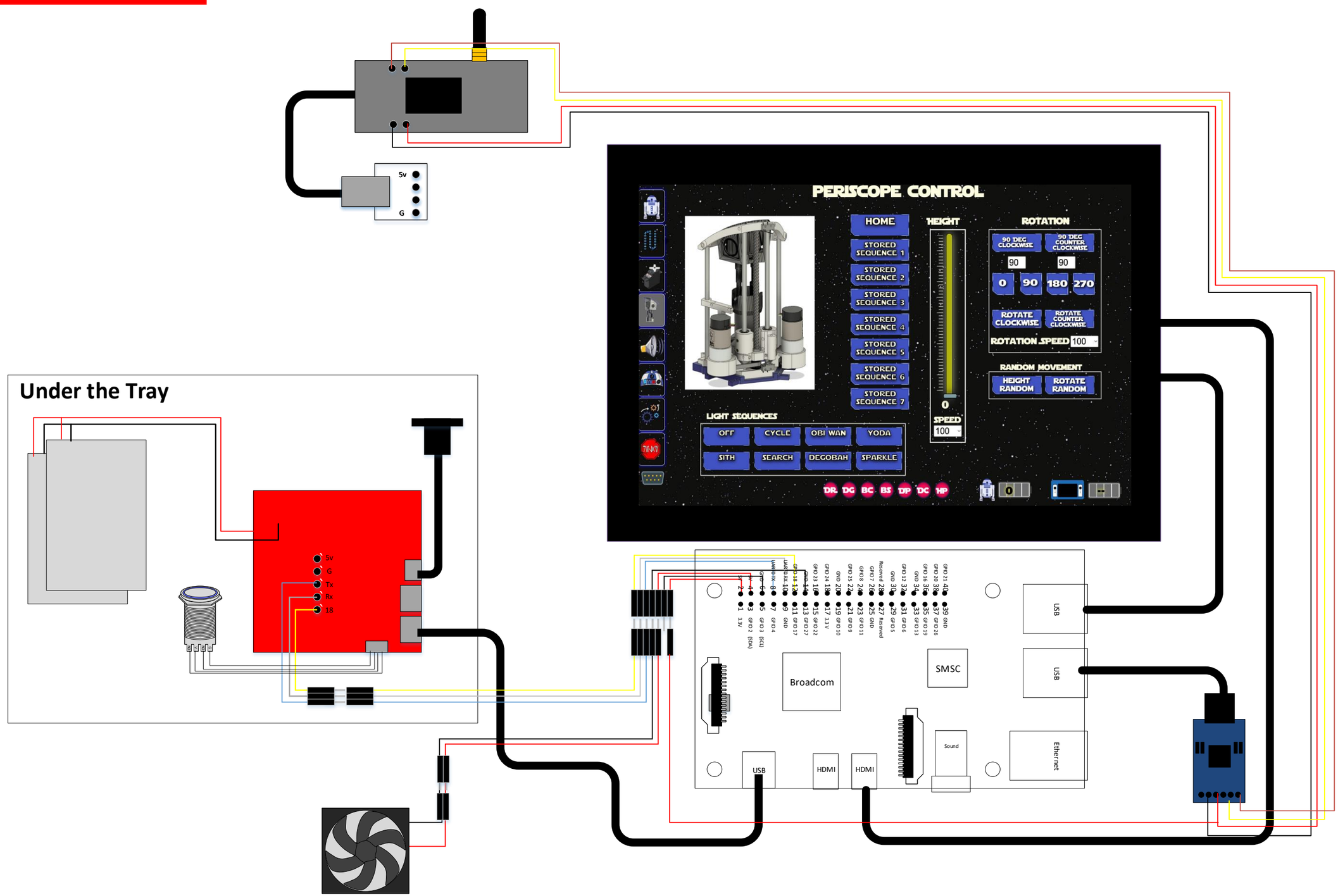

Needs a lot of work

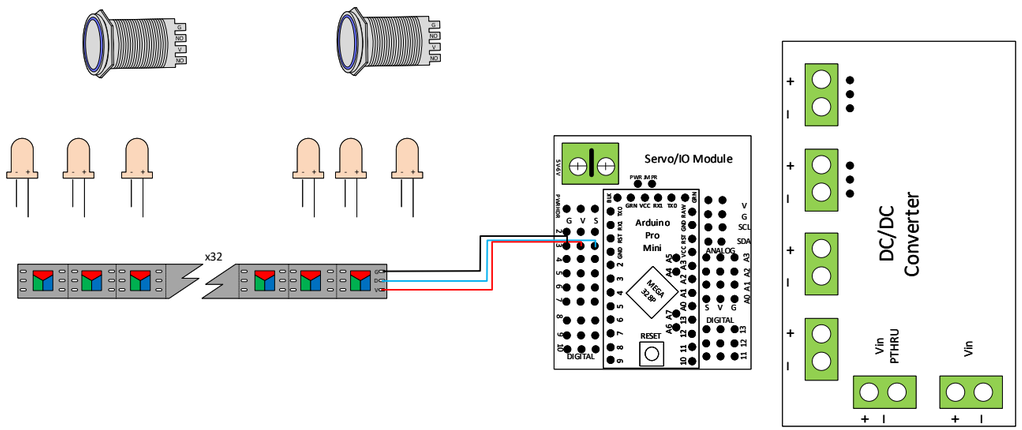

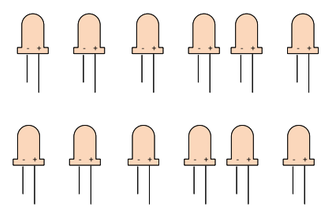

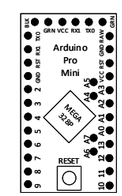

Communication Layers

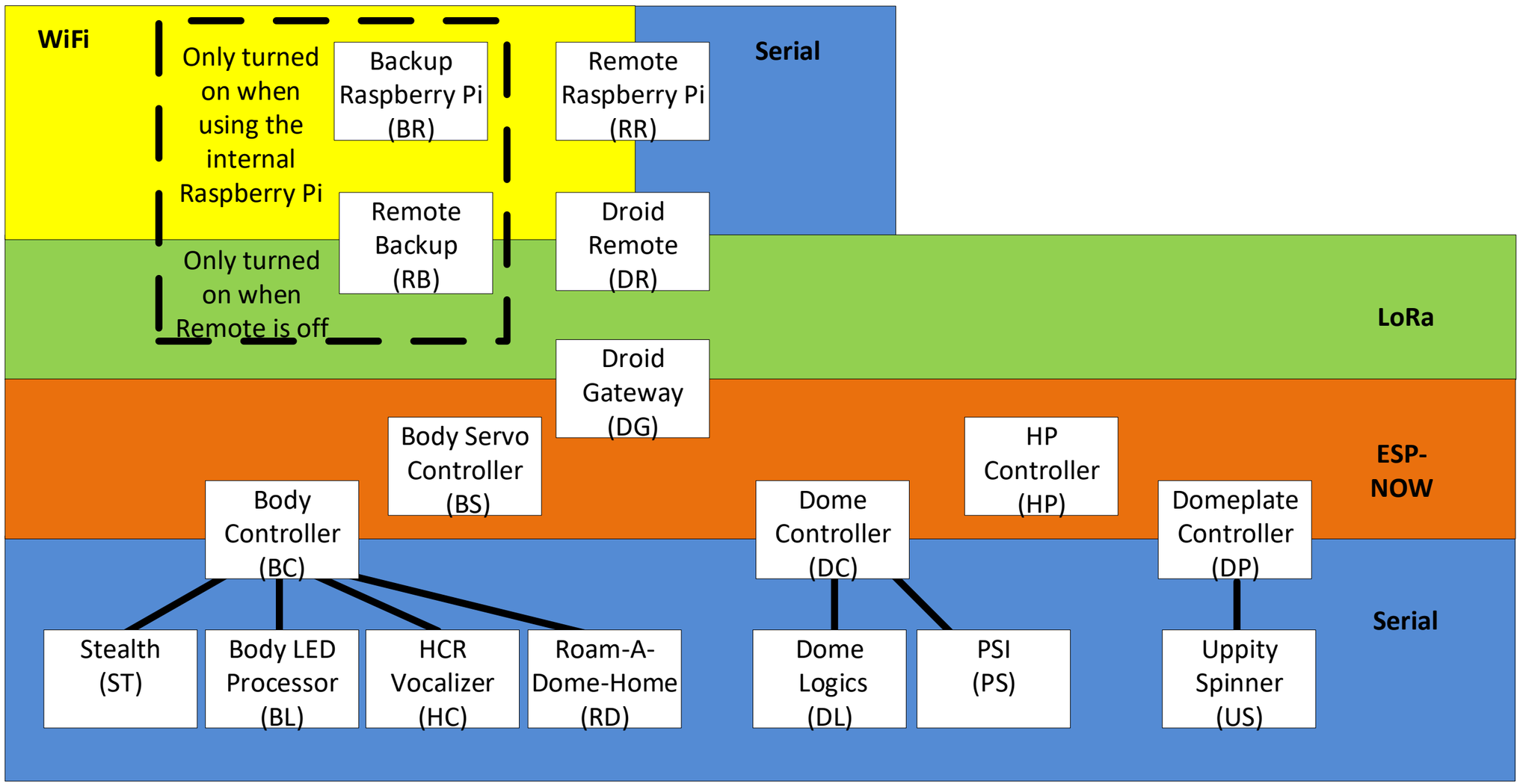

SF: Maint Lights
Down: Off
Forward: On
SE: Function Select
DOWN
SB: RADH Mode
Rear: Disabled
Middle: Enabled
Up: Enabled
SC: Light Mode
Down: Normal
Middle: All On
Up: All Off
SH:
SG: Slow Drive
Down: Normal
Middle: Slow Mode
Up:
SA: Drive Mode
Down: Standby
Middle: Active
Up: Dome Only
HCR Vocalizer Volume
HCR WAV Volume
SD: Muse
Down: Muse On
Middle: Muse Off
Up: Muse Off
S1
S2
Harlem Shake
Periscope Seq 4
Panel Wave
Short Circuit
T3
T2
All Close Periscope Down
Wave Arm
Drawer Wave
Door Easing
Fast Wave
Display
Panel Wave 2
All Open
T4
T5
T6
T1
Mute HCR
Happy
Mad
Sad
Scared
Fart
SYS
DISP
RTN
DUAL BAND
900M/2.4G

SF: Maint Lights
Down: Off
Forward: On
SE: Function Select
MIDDLE
SB: RADH Mode
Rear: Disabled
Middle: Enabled
Up: Enabled
SA: Drive Mode
Down: Standby
Middle: Active
Up: Dome Only
SH:
SG: Slow Drive
Down: Normal
Middle: Slow Mode
Up:
SC: Light Mode
Down: Normal
Middle: All On
Up: All Off
SD: Muse
Down: Muse On
Middle: Muse Off
Up: Muse Off
HCR Vocalizer Volume
HCR WAV Volume
S1
S2
Periscope up and lights on
Periscope Home
T3
Periscope Rotate Random
Periscope Seq 10
T2
Flutter
T4
Smoke Sequence
CPU Arm Sequence
T5
Long Dance
T6
Arm Saber
Launch Saber
T1
Mute HCR
Dance Star Wars
Leia Message
Star Wars Theme
Vadar Theme
Cantina Song
FrSky
X18
900M/2.4G DUAL BAND

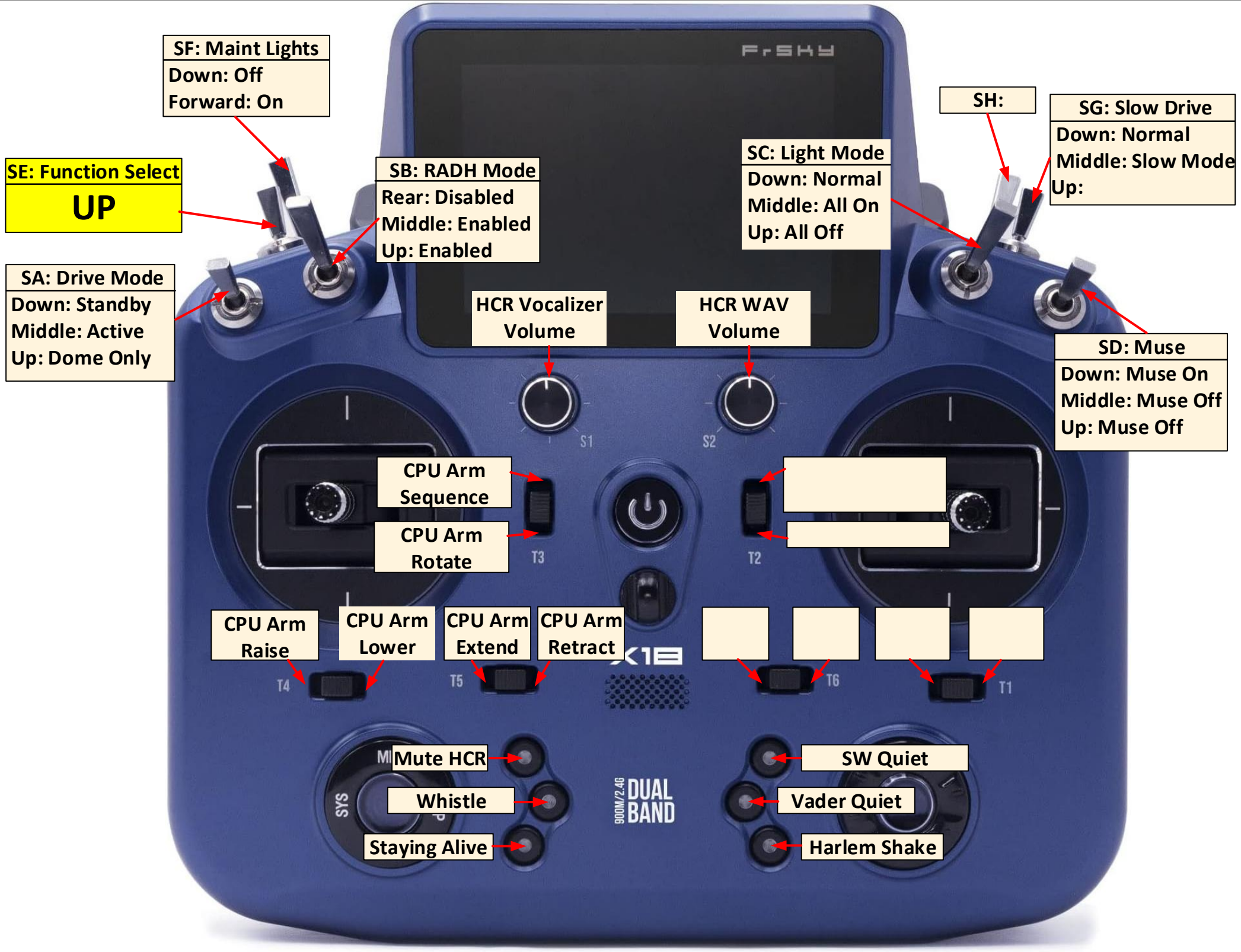
SF: Maint Lights
Down: Off
Forward: On
SE: Function Select
UP
SB: RADH Mode
Rear: Disabled
Middle: Enabled
Up: Enabled
SA: Drive Mode
Down: Standby
Middle: Active
Up: Dome Only
SH:
SG: Slow Drive
Down: Normal
Middle: Slow Mode
Up:
SC: Light Mode
Down: Normal
Middle: All On
Up: All Off
HCR Vocalizer Volume
HCR WAV Volume
SD: Muse
Down: Muse On
Middle: Muse Off
Up: Muse Off
S1
S2
CPU Arm Sequence
CPU Arm Rotate
T3
T2
CPU Arm Raise
CPU Arm Lower
CPU Arm Extend
CPU Arm Retract
T4
T5
T6
T1
Mute HCR
Whistle
Staying Alive
SW Quiet
Vader Quiet
Harlem Shake
SYS
900M/2.4G
DUAL BAND

Wireless Using ESP-NOW

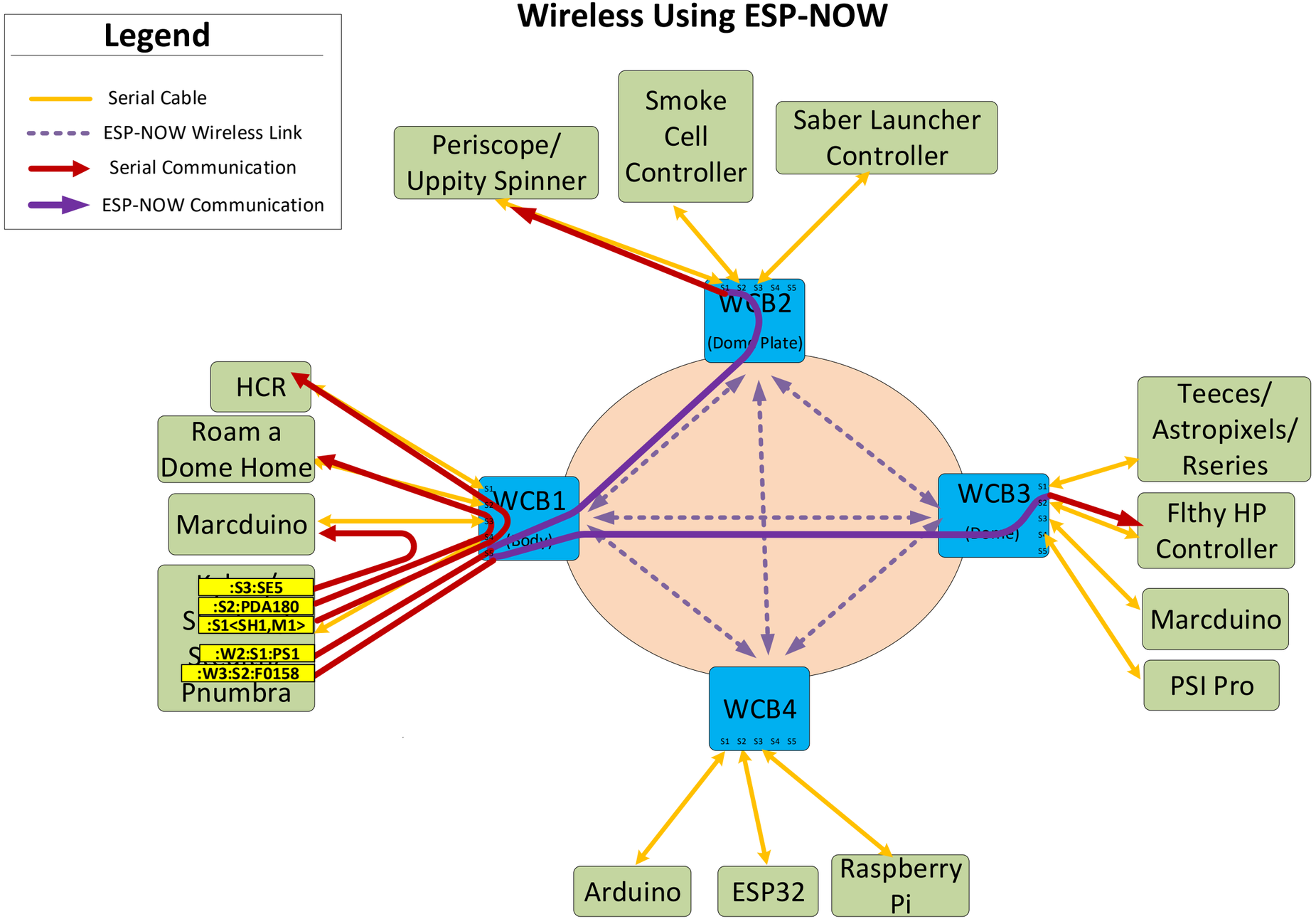

Option 1
(Passthrough)

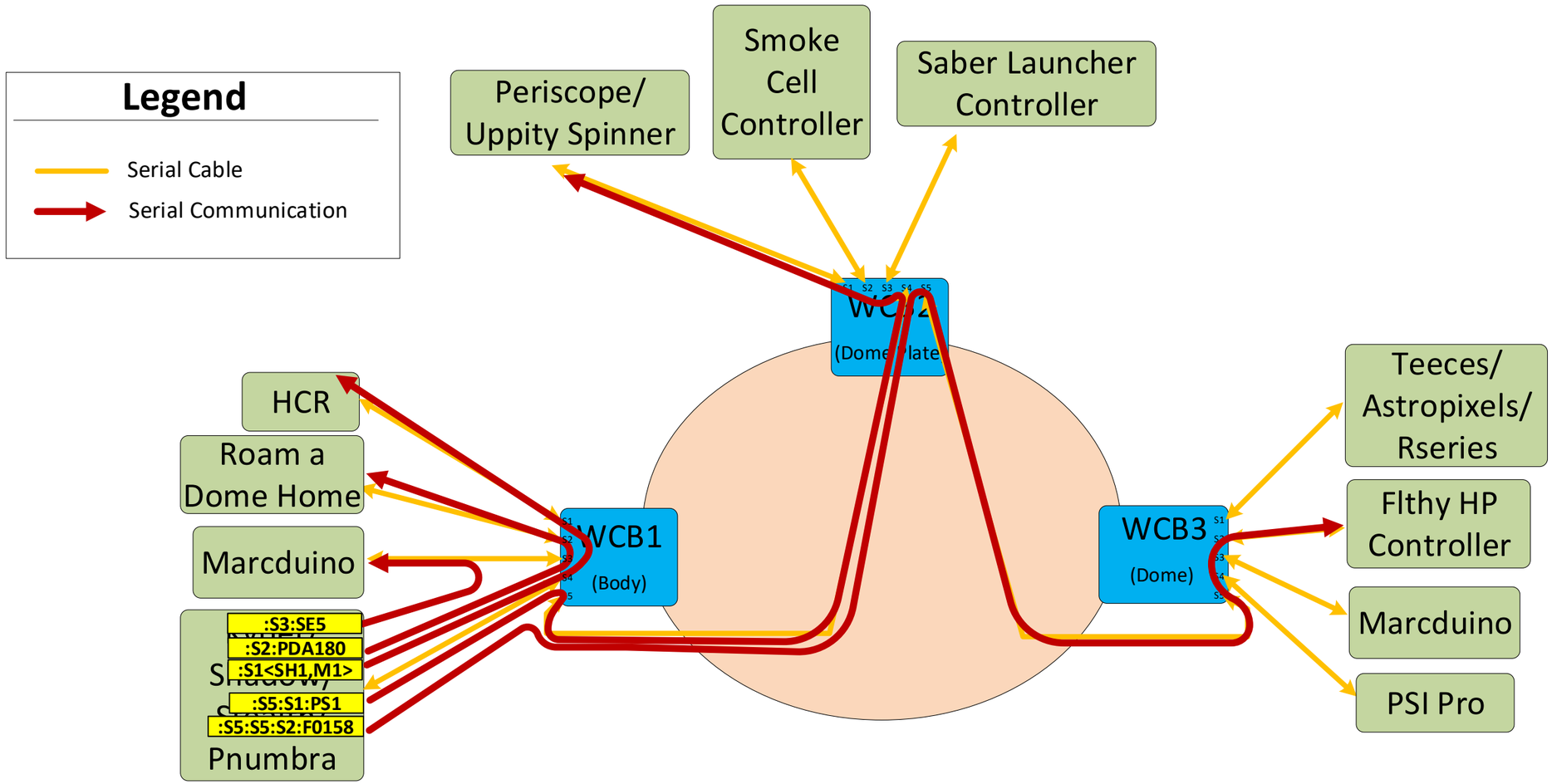

Option 2
(Hub and Spoke)

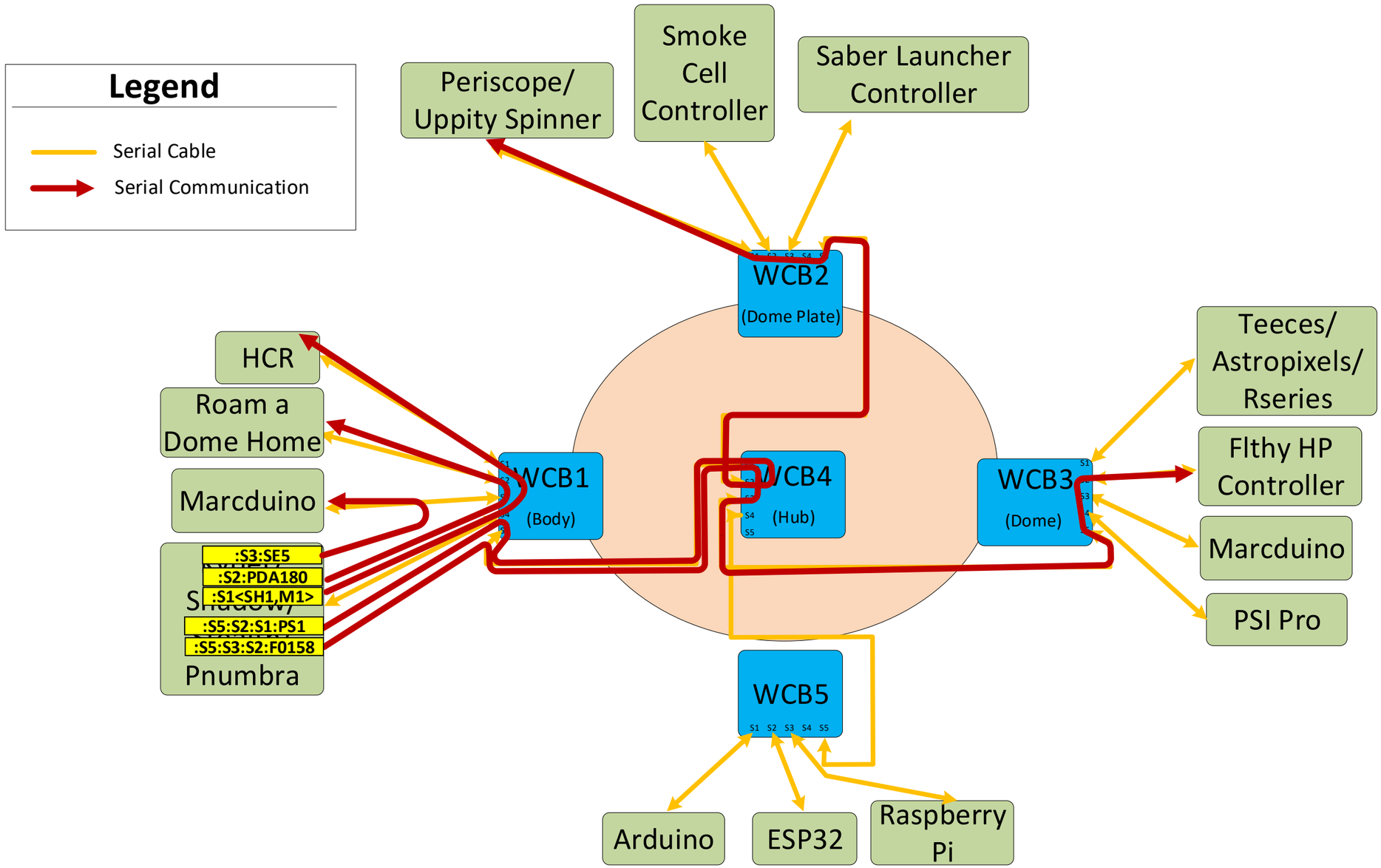

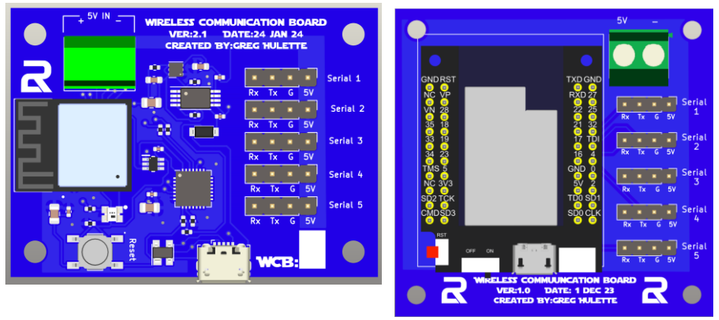
WIRELESS COMMUNICATION BOARD
VER:2.1 DATE:24 JAN 24
CREATED BY:GREG HULETTE
5V IN
Serial 1
Serial 2
Serial 3
Serial 4
Serial 5
Rx Tx G 5V
Reset
WCB:
WIRELESS COMMUNICATION BOARD
VER:1.0 DATE: 1 DEC 23
CREATED BY:GREG HULETTE

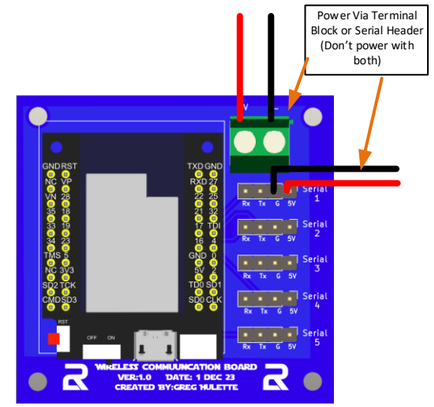
Power Via Terminal Block or Serial Header (Don't power with both)
WIRELESS COMMUNICATION BOARD
VER:1.0 DATE: 1 DEC 23
CREATED BY:GREG HULETTE

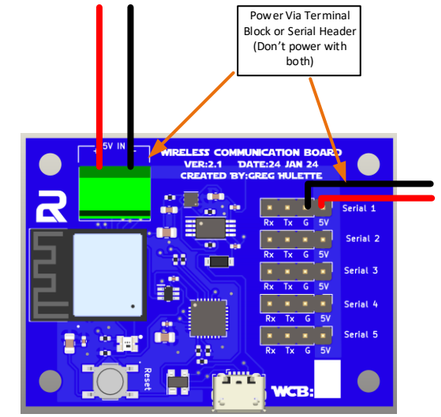
Power Via Terminal Block or Serial Header (Don't power with both)
WIRELESS COMMUNICATION BOARD
VER:2.1 DATE:24 JAN 24
CREATED BY:GREG HULETTE
5V IN
Serial 1
Serial 2
Serial 3
Serial 4
Serial 5
Reset
WCB:

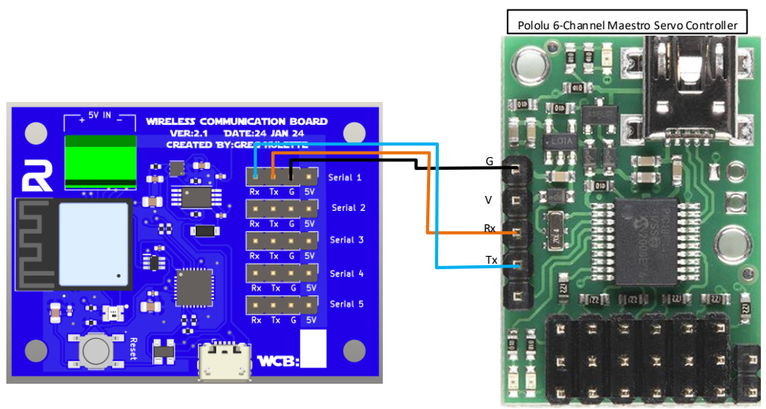
Pololu 6-Channel Maestro Servo Controller
WIRELESS COMMUNICATION BOARD
VER:2.1 DATE:24 JAN 24
CREATED BY:GREG HULETTE
5V IN
Serial 1
Serial 2
Serial 3
Serial 4
Serial 5
Reset
WCB:
G
V
Rx
Tx

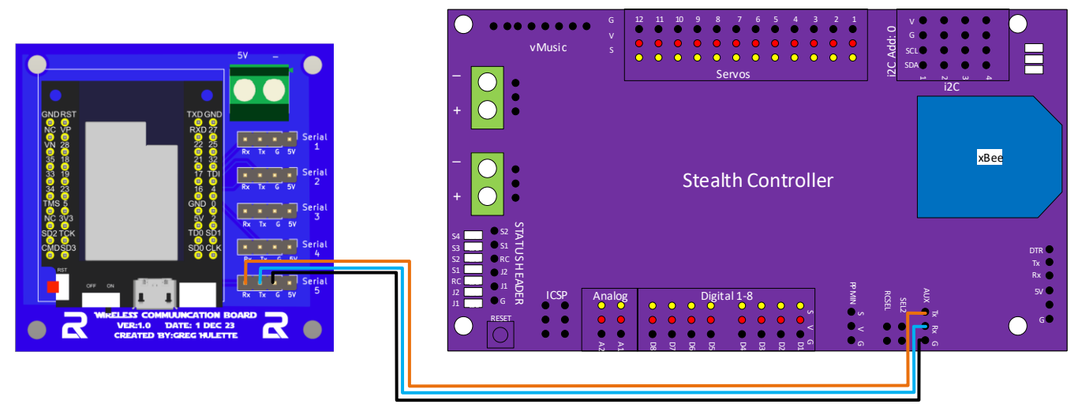
WIRELESS COMMUNICATION BOARD
VER:1.0 DATE: 1 DEC 23
CREATED BY:GREG HULETTE
vMusic
Servos
i2C Addr:0
i2C
xBee
Stealth Controller
STATUS HEADER
ICSP
Analog
Digital 1-8
RESET

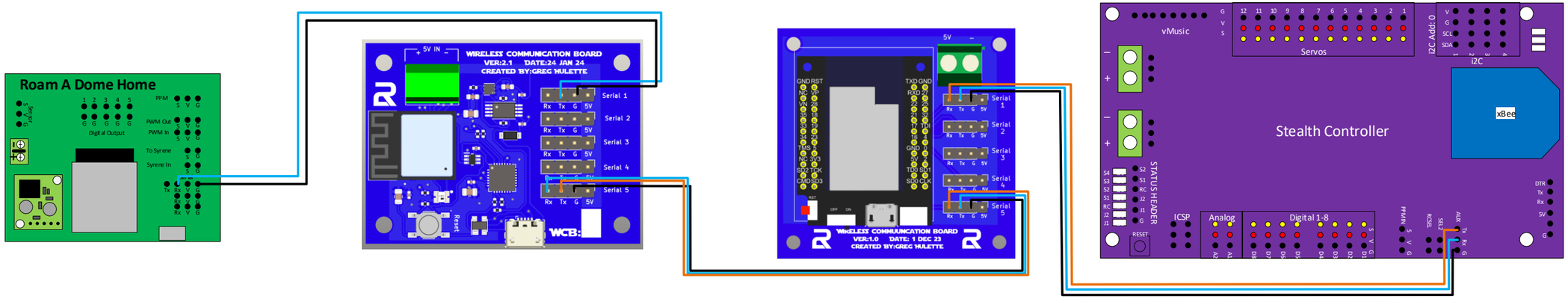
Roam A Dome Home
PPM
PWM Out
PWM In
Digital Output
To Syrene
Syrene In
WIRELESS COMMUNICATION BOARD
VER:2.1 DATE:24 JAN 24
CREATED BY:GREG HULETTE
5V IN
Serial 1
Serial 2
Serial 3
Serial 4
Serial 5
Reset
WCB:
WIRELESS COMMUNICATION BOARD
VER:1.0 DATE: 1 DEC 23
CREATED BY:GREG HULETTE
vMusic
Servos
i2C Addr:0
i2C
xBee
Stealth Controller
STATUS HEADER
ICSP
Analog
Digital 1-8
RESET

Needs to be verified and Updated

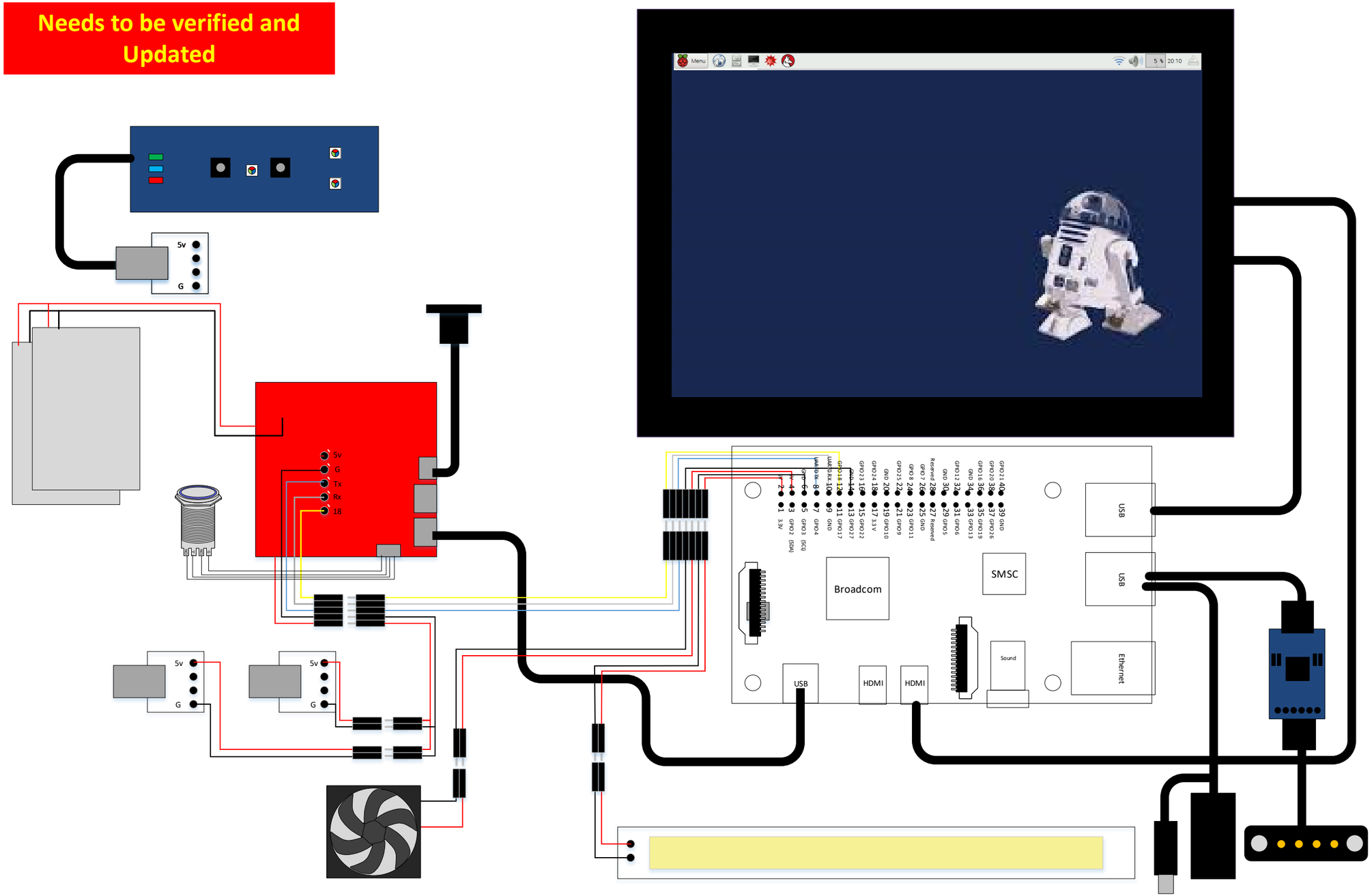

Back to Quick Reference Tab

Action	Gesture	Stealth Config.txt	Body Servo Expander I2C = 9	Body Arduino Pro Mini I2C = 8	Body Arduino Mega I2C = 7	Dome Expander I2C = 10	Flthy HP I2C = 25	HP Servo Board I2C = 65	Teeces (Serial)	Teeces (Serial)
			Space Holer							

Actions	Details	Actions	Details	Actions	Details	Actions	Details
?? 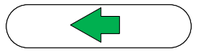 Left		**Normal Operations** 1 – Opens the Dome panels 2 – Changes the Camera Lens LED Colors to a random color each time it closes a few panels 3 – Changes the HPs to a random color each time it runs through a cycle of opening and closing 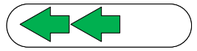 Left, Left	Double Click to get To the Details Page	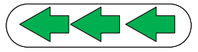 Left, Left	Double Click to get To the Details Page	**Open All Doors** 1 – Opens all doors 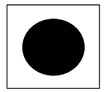 Button 1	
?? 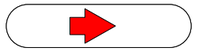 Right	g=656,4,10,5	**Panel Wave** 1 – Opens the Dome 2 – Changes the Camaera Lens LED Colors to a random color each time it closes a few panels 3 – Sets the HP's to random pulse 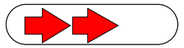 Right, Right	Double Click to get To the Details Page	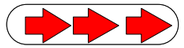 Right, Right, Right		**Close All Doors** 1 – Opens all doors 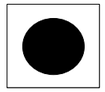 Button 2	
?? Up	g=656,4,10,5	**Panel Wave Fast** 1 – Opens the Dome 2 – Changes the Camaera Lens LED Colors to a random color each time it closes a few panels 3 – Sets the HP's to random pulse Up, Up	Double Click to get To the Details Page	Up, Up, Up		**Open All Doors** 1 – Opens all doors 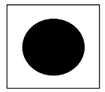 Button 3	
?? Down		**Dome/Periscope Aniimation** Down, Down	Double Click to get To the Details Page	Down, Down, Down		**Close All Doors** 1 – Opens all doors 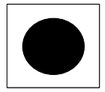 Button 4	
	Double Click to get To the Details Page	**All Open & Close** 1 - Waves the Dome Panels 2 - Flashes the Camera LEDs to Random Colors, 3 - Turns the HP LEDs to Rainbow 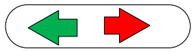 Left, Right,		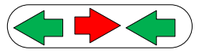 Left, Right,		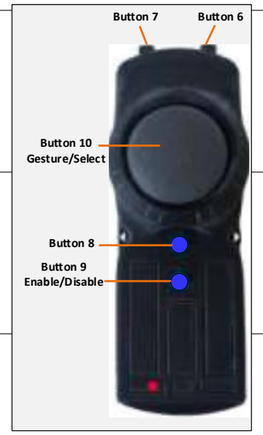 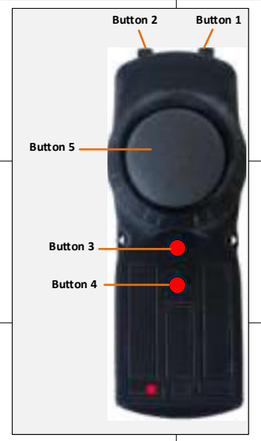	
	Double Click to get To the Details Page	**Harlem Shake** 1 - Waves the Dome Panels 2 - Flashes the Camera LEDs to Random Colors, 3 - Turns the HP LEDs to Rainbow Right, Left,		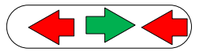 Right, Left,			
		All Close Up. Down		Up. Down			
		Down, Up		Down, Up			

R2D2-Wiring-Diagram--15-Jan-2025-11-34-AM

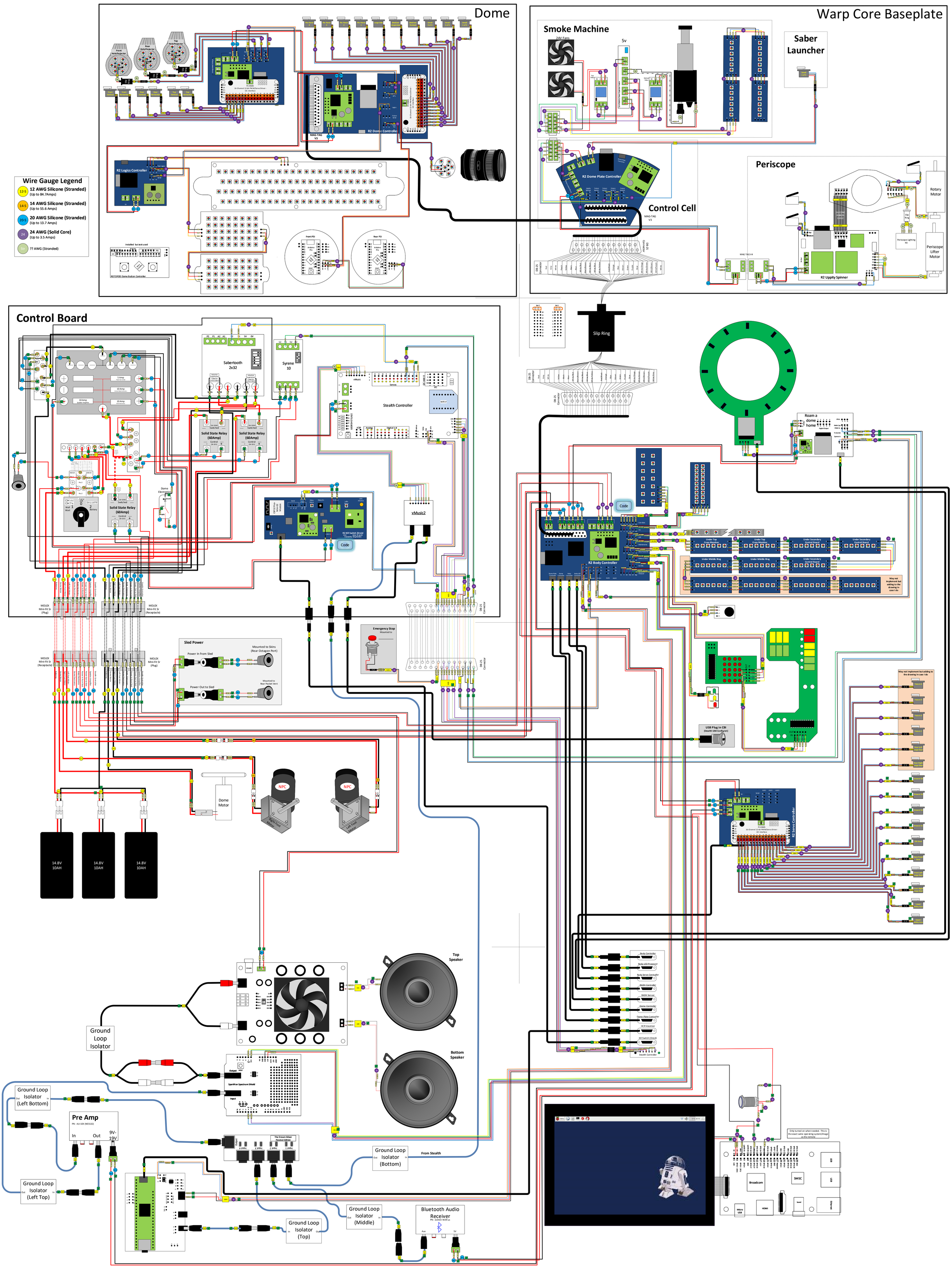

Actions	Details	Actions	Details	Actions	Details	Actions	Details
Normal Operations Left	g=4,5,1 a=A01	Harlem Shake Left, Left	g=454,5,5 a=A06	Open/Close Easing Left, Left, Left	g=45454,5,9 a=A13	Toggle Lights Button 1 Vader Theme LONG BTN 1	b=1,5,13 a=A10 lb=1,5,11 a=A16
Panel Wave Right	g=6,5,2 a=A02	Door Wave Right, Right	g=656,5,6 a=A12	Right, Right, Right		Fart Noise Button 2 Star Wars Theme LONG BTN 2	b=2,5,14 a=A21 lb=2,5,10 a=A15
Panel Wave Fast Up	g=2,5,3 a=A03	Short Circuit Up, Up	g=252,5,7 a=A14	Up, Up, Up		Flutter Button 3 Wave Utility Arm LONG BTN 3	b=3,5,15 a=A08 lb=3,5,17 a=A22
Dome & Periscope Down	g=8,5,4 a=A04	Periscope Seq 2 Down, Down	g=858,5,8 a=A17	Periscope Seq 10 Down, Down, Down	g=85858,5,12 a=A18	Toggle Door Open/Close Button 4 Arm Saber LONG BTN 4	b=4,5,16 a=A09 lb=4,5,18 a=A023
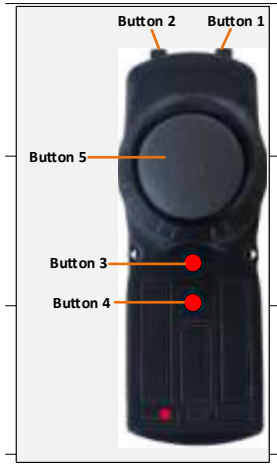		Left, Right,		Left, Right, Left		Sound Chat Launch Saber	b=6,1,2 lb=6,5,19 a=A024
		Right, Left,		Right, Left, Right,		Sound Bleep Smoke Sequence	b=7,1,5 lb=7,5,20 =A025
		Up, Down		Up, Down, Up		Sound Scream	b=8,1,6 lb=8,5,21 a=A026
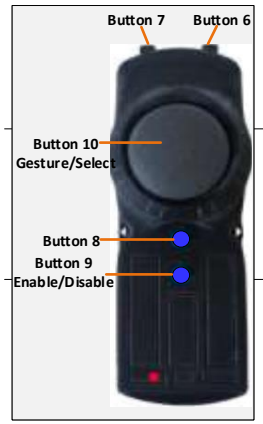		Down, Up		Down, Up, Down		Sound	b=9,1,2 lb=9,5,22 a=A027