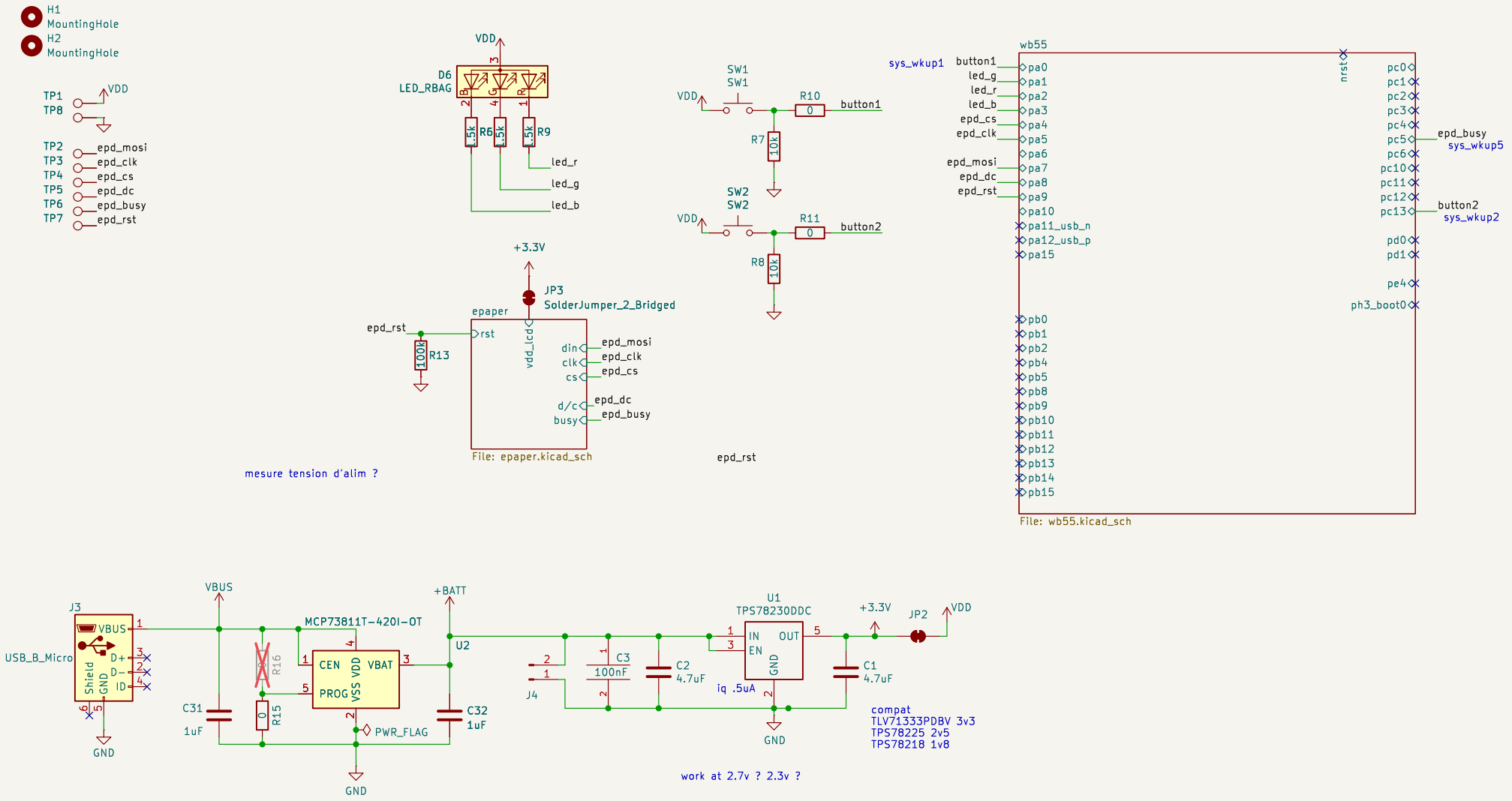

Sheet: /
File: linky_panel.kicad_sch

Title: linky2ble

Size: A4	Date: 2024-10-14	**Rev: 1.0.0**
KiCad E.D.A. 8.0.5		Id: 1/3

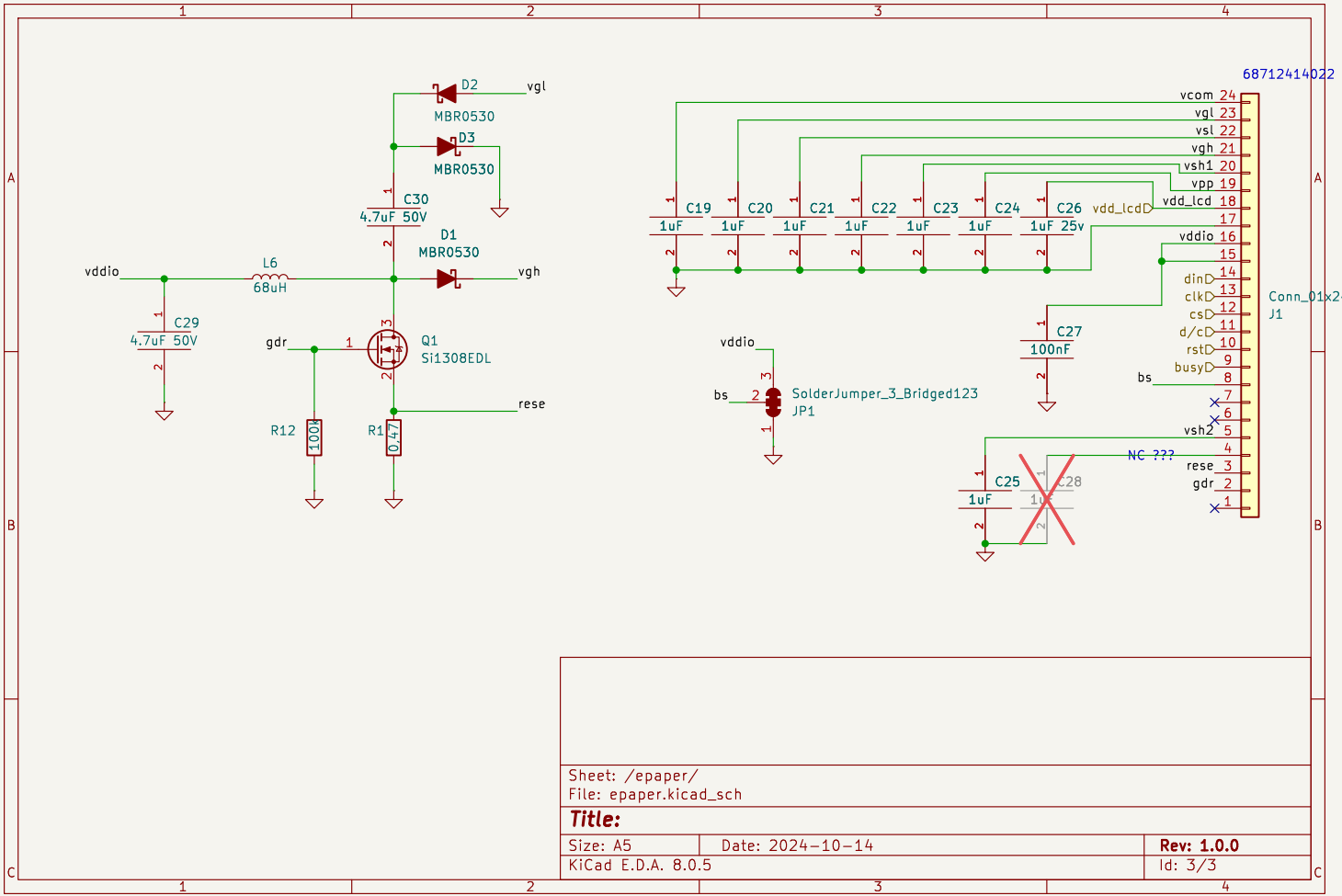

Sheet: /epaper/
File: epaper.kicad_sch

Title:

Size: A5	Date: 2024-10-14	**Rev: 1.0.0**
KiCad E.D.A. 8.0.5		Id: 3/3

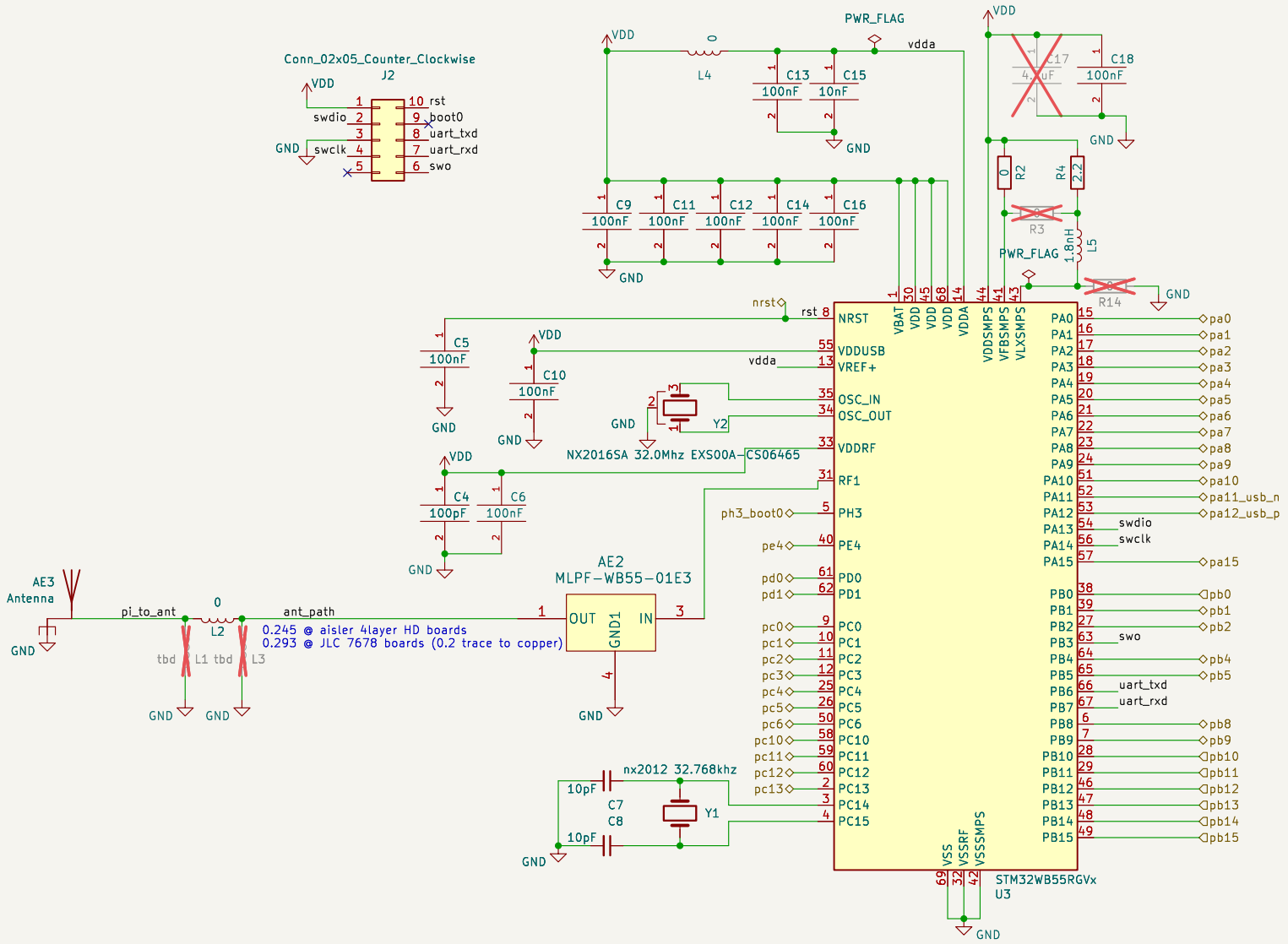

ws

Sheet: /wb55/

File: wb55.kicad_sch

Title:

Size: A4	Date: 2024-10-14	**Rev: 1.0.0**
KiCad E.D.A. 8.0.5		Id: 3/3