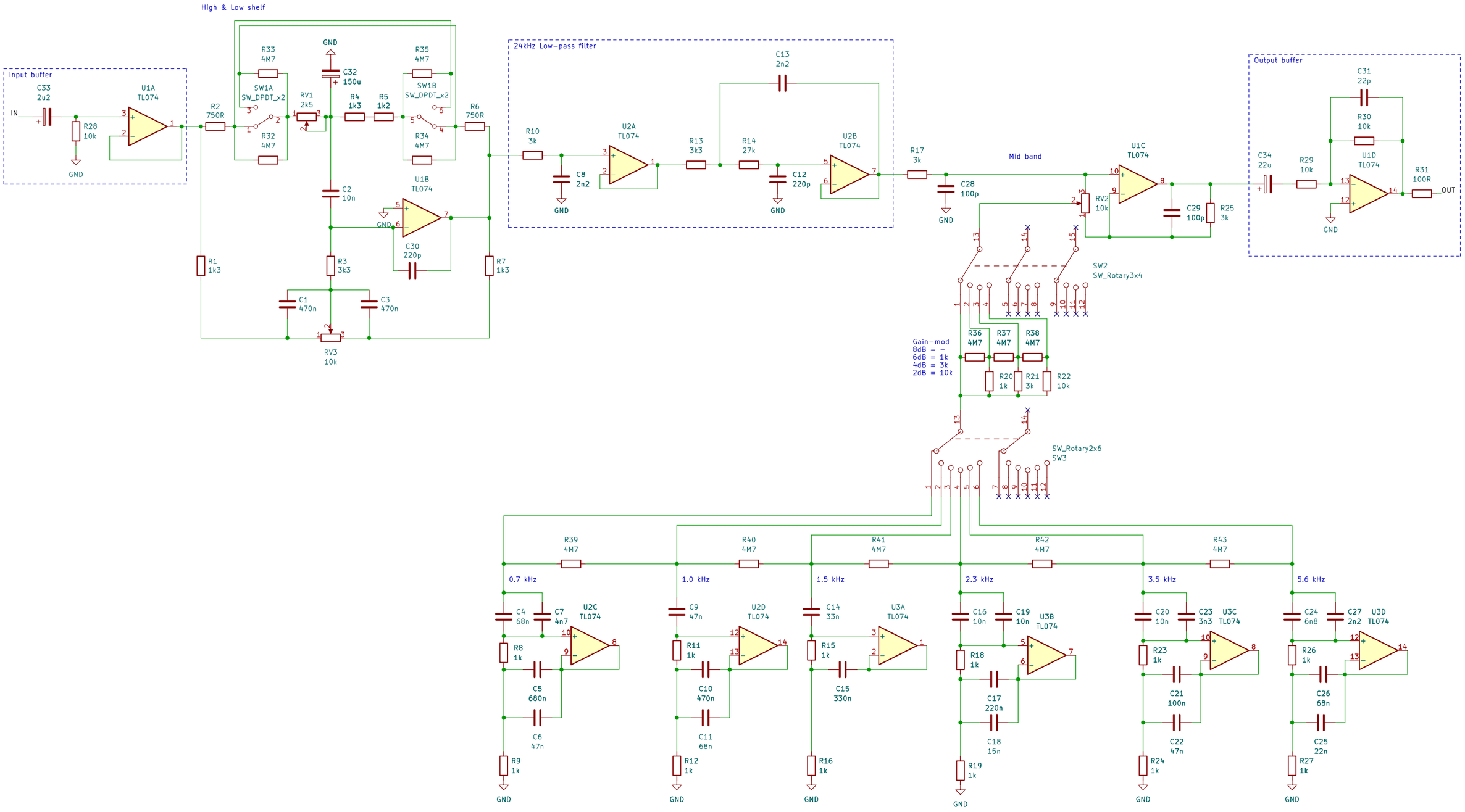

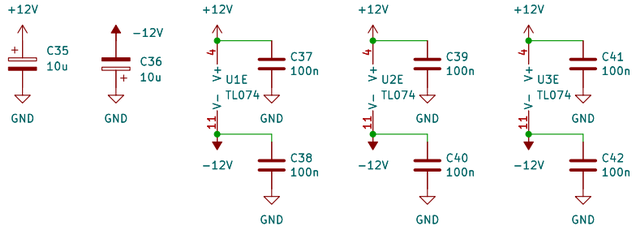

This work is licensed under the Creative Commons Attribution–ShareAlike 4.0 International License.
To view a copy of this license, visit http://creativecommons.org/licenses/by-sa/4.0/
or send a letter to Creative Commons, PO Box 1866, Mountain View, CA 94042, USA.

=^x^=
Siemens Inspired Audio Module
Robert–André Vettel

Sheet: /
File: Funkhaus–295.kicad_sch

Title: SIAM 295b

Size: A3	Date: 2022–08–14	**Rev: 05c**
KiCad E.D.A. kicad (6.0.7)		Id: 1/1