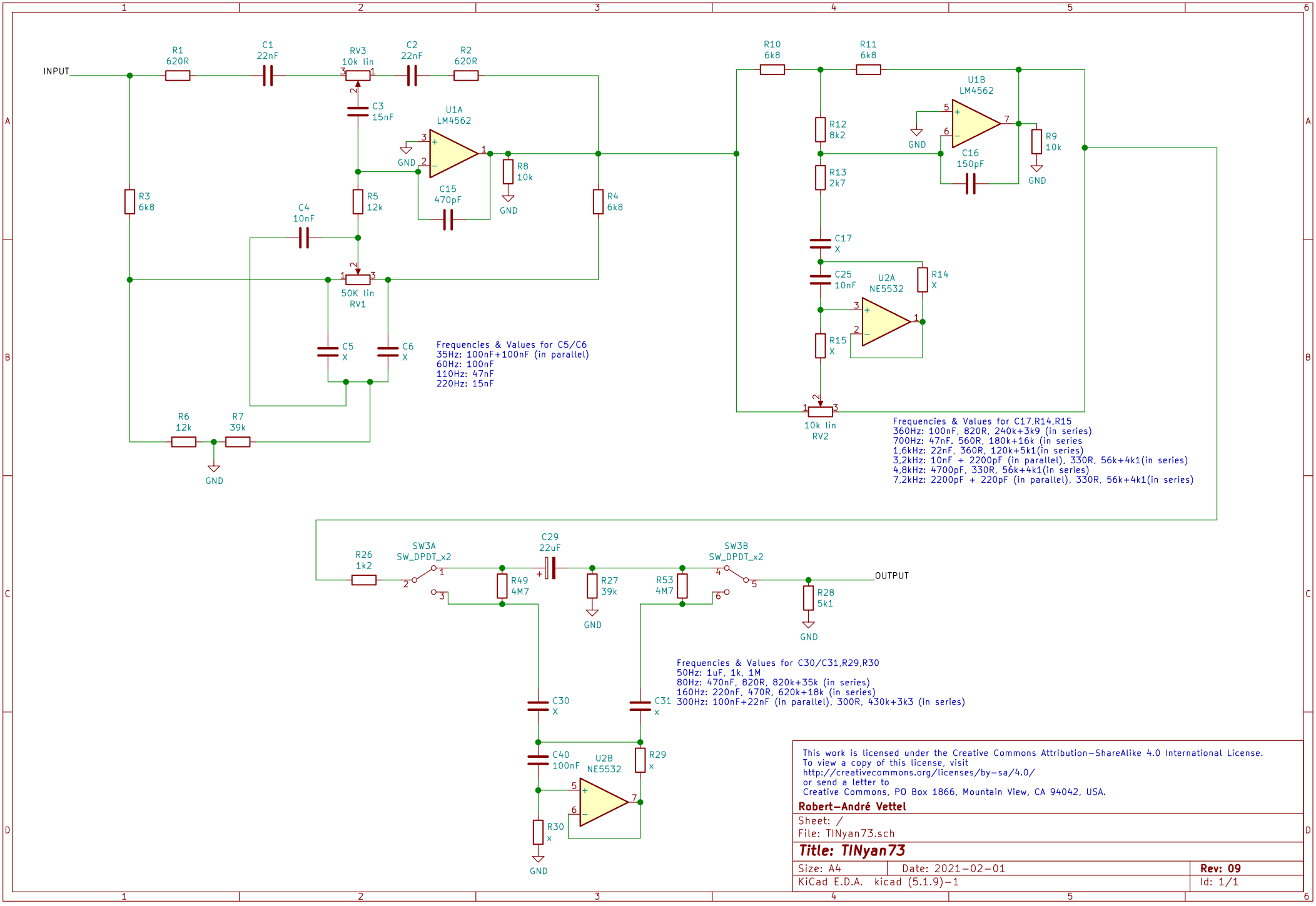

This work is licensed under the Creative Commons Attribution-ShareAlike 4.0 International License.
To view a copy of this license, visit
http://creativecommons.org/licenses/by-sa/4.0/
or send a letter to
Creative Commons, PO Box 1866, Mountain View, CA 94042, USA.

Robert-André Vettel

Sheet: /
File: TINyan73.sch

Title: TINyan73

Size: A4	Date: 2021-02-01	**Rev: 09**
KiCad E.D.A. kicad (5.1.9)-1		Id: 1/1