REVISIONS

REV.	DATE	APPROVED	CHANGES
1.6	04/17/2023	GARZA	JOB NUMBER 055749-1-13
1.7	04/17/2023	GARZA	NO GROUND BAR, BLUE & WHT/BLU DC WIRING, 0VVDC TO GND BLOCKS
1.8	08/08/2023	GARZA	NO GROUND BAR, BROWN & BLUE DC WIRING
1.9	11/10/2025	GARZA	UPDATE BREAKERS TO ABB, REPLACE PSU1 WITH 2838450000
2.0	01/30/2026	GARZA	ADD 24V BREAKERS

R3DI Master Control Panel
Document book

	NAME	DATE
DRAWN	Guild	8/11/2022
CHECKED		
ENG APPR.		
MFG APPR.		
Q/A		

PROPRIETARY AND CONFIDENTIAL

THE INFORMATION CONTAINED IN THIS DOCUMENT IS THE SOLE PROPERTY OF MSI TEC, INC. ANY REPRODUCTION IN PART OR AS A WHOLE WITHOUT THE WRITTEN PERMISSION OF MSI TEC, INC IS PROHIBITED.

MSI TEC PRODUCTIVITY THROUGH TECHNOLOGY

TECHNICAL ENGINEERING CENTER

MSI TEC, INC
12929 E PEAKVIEW AVE
CENTENNIAL CO 80111
720-875-9835

TITLE: R3DI Master Control Panel

SIZE B | PART NO 09-1427-001 | REVISION 2.0

SCALE: N/A

ELECTRICAL LINE AND SCHEMATIC SYMBOLS

WIRE MARK # AWG - COLOR	CONDUCTOR
CABLE TAG (LABEL-COLOR)	CABLE CONDUCTOR
	INTERNAL AND EXTERNAL BRIDGES
WIRE MARK # AWG - COLOR	FIELD INSTALLED CONDUCTOR
CABLE TAG (LABEL-COLOR)	FIELD INSTALLED CABLE CONDUCTOR
	FIELD INSTALLED COMPONENT
	CONDUCTORS CONNECTED
	CONDUCTORS NOT CONNECTED
	TWISTED CONDUCTOR PAIR
	RELAY COIL
	NORMALLY OPEN RELAY CONTACT
	NORMALLY CLOSED RELAY CONTACT
	NORMALLY OPEN SWITCH
	NORMALLY CLOSED SWITCH
	SINGLE POLE DOUBLE THROW RELAY CONTACT
	TERMINAL BLOCK
	CIRCUIT BREAKER
	RESISTOR
	POTENTIOMETER
	FUSE
	DIODE
	GROUND CONNECTION
	MANUAL EMERGENCY STOP SWITCH
	MANUAL NC BUTTON
	MANUAL NO BUTTON
	TRANSFORMER
	POWER SUPPLY
	EXTERNAL JUMPER
	FAN
	BUSBAR
G	LIGHT (GREEN)
M	MOTOR
ENC	ENCODER
	DISCONNECT SWITCH
	NORMALLY OPEN CONTACT- SOLID STATE RELAY
	SOLENOID

MSiTEC
PRODUCTIVITY THROUGH TECHNOLOGY

(866) 397 - 7388
www.msitec.com
Offices: AZ, CA, CO

TITLE: R3DI Master Control Panel

Customer:

PROPRIETARY AND CONFIDENTIAL

THE INFORMATION CONTAINED IN THIS DOCUMENT IS THE SOLE PROPERTY OF MSI TEC, INC. ANY REPRODUCTION IN PART OR AS A WHOLE WITHOUT THE WRITTEN PERMISSION OF MSI TEC, INC IS PROHIBITED.

SIZE B

DWG. NO. 09-1427-001

REVISION 2.0

Document realized with version : 2026.0.0.5070
SOLIDWORKS Electrical

ENGINEERING CHANGE LOG

REV	PATCH REV	DESCRIPTION	DATE	APPROVED
1.6	-	JOB NUMBER 055749-1-13	4/17/2023	GARZA
1.7	-	NO GROUND BAR, BLUE & WHITE/BLUE DC WIRING, 0VDC WIRES TO GROUND BLOCKS	4/17/2023	GARZA
1.8	-	NO GROUND BAR, BROWN AND BLUE DC WIRING	08/08/2023	GARZA
1.9	-	UPDATE BREAKERS TO ABB, REPLACE PSU1 WITH 2838450000. 1469520000 POWER SUPPLY (PSU1) WENT OBSOLETE.	11/10/2025	GARZA
-	1.9.1	- DOOR GROUND LENGTH - CBL18 CORRECTED TO BE 4FT - ADD NOTE 10 - CORRECT CBL21 TO BE QUABBIN 8304	12/11/2025	GARZA
-	1.9.2	- INCOMING POWER UPDATED TO 20A - UPS AND CBL23 TO BE FIELD INSTALLED - SHOW NUVATION POWER CORD AS CABLE - SSG CABLES 18 AWG TWISTED PAIR (SHEET 6 AND SHEET 9) - LC11-15 AND L2-16 BLUE/WHT 12 AWG WIRE - SHOW HVAC FIELD WIRING FROM CN1' - ADD 1FT CAT5E CABLE5 - F2 T7+ AND T6- WITH 18 AWG TWISTED PAIR - 18 AWG TWISTED PAIRS ON SHEET 11 - UPDATE FIELD WIRING 24V AND 0V COLORS ON B1 - WIRE AI0- AND AI1- TO 0V (NO LONGER FIELD INSTALLED) - REMOVE WIRING FROM COM0, DI0, GND	1/2/2026	GARZA
-	1.9.3	- 47K OHM RESISTOR MOVED TO FMM-1 BETWEEN TERMINALS T7+ AND T6-. NOW MSI INSTALLED. - MOVE 24V BUS OVER ON PAGE 10 (NO LONGER COVERING THE ROW NUMBERS) - CHANGE SSG L WIRE COLORS - ADD CURVE TO CIRCUIT BREAKER SYMBOLS - ADD NOTE 11 TO BUILD NOTES	1/7/2026	GARZA
2.0	-	- ADD 24V BREAKERS CB 10-CB18 - RESIZE WIRES ACCORDING TO NEW BREAKER SIZES.	1/30/2026	GARZA
-	2.0.1	-REMOVE CB18 AND WIRE 025401-10 TO CB17 24V2 INSTEAD. SEE SHEET 10.	2/3/2026	GARZA
-	2.0.2	- REPLACE CB10-CB17 WITH 6A C CURVE BREAKERS SU201M-C6. 6A C CURVE HAS BETTER AVAILABILITY. - ADD 0V WIRES TO 0V TERMINAL BLOCKS FOR 24V, 24V1, 24V2	2/6/2026	GARZA
-	2.0.3	- ADD EXTRA 1988250000 TERMINAL BLOCKS FOR 8 AWG WIRES - UPDATE JUMPERS ACCORDINGLY - MOVE TB8 DOWN TO MAKE ROOM FOR 1988250000 BLOCKS	2/6/2026	GARZA
-	2.0.4	- ADD CB10 (SU201M-K25) AND CB11 (SU201M-C6) - CHANGE CIRCUIT BREAKER LABELS OF BREAKERS CB12-CB19 - CHANGE TB2 TERMINAL BLOCKS TO 2051520000,2534390000,2534750000, AND 1521700000.	2/9/2026	GARZA

PROPRIETARY AND CONFIDENTIAL

THE INFORMATION CONTAINED IN THIS DOCUMENT IS THE SOLE PROPERTY OF MSI TEC, INC. ANY REPRODUCTION IN PART OR AS A WHOLE WITHOUT THE WRITTEN PERMISSION OF MSI TEC, INC IS PROHIBITED.

NETWORKING DIAGRAM

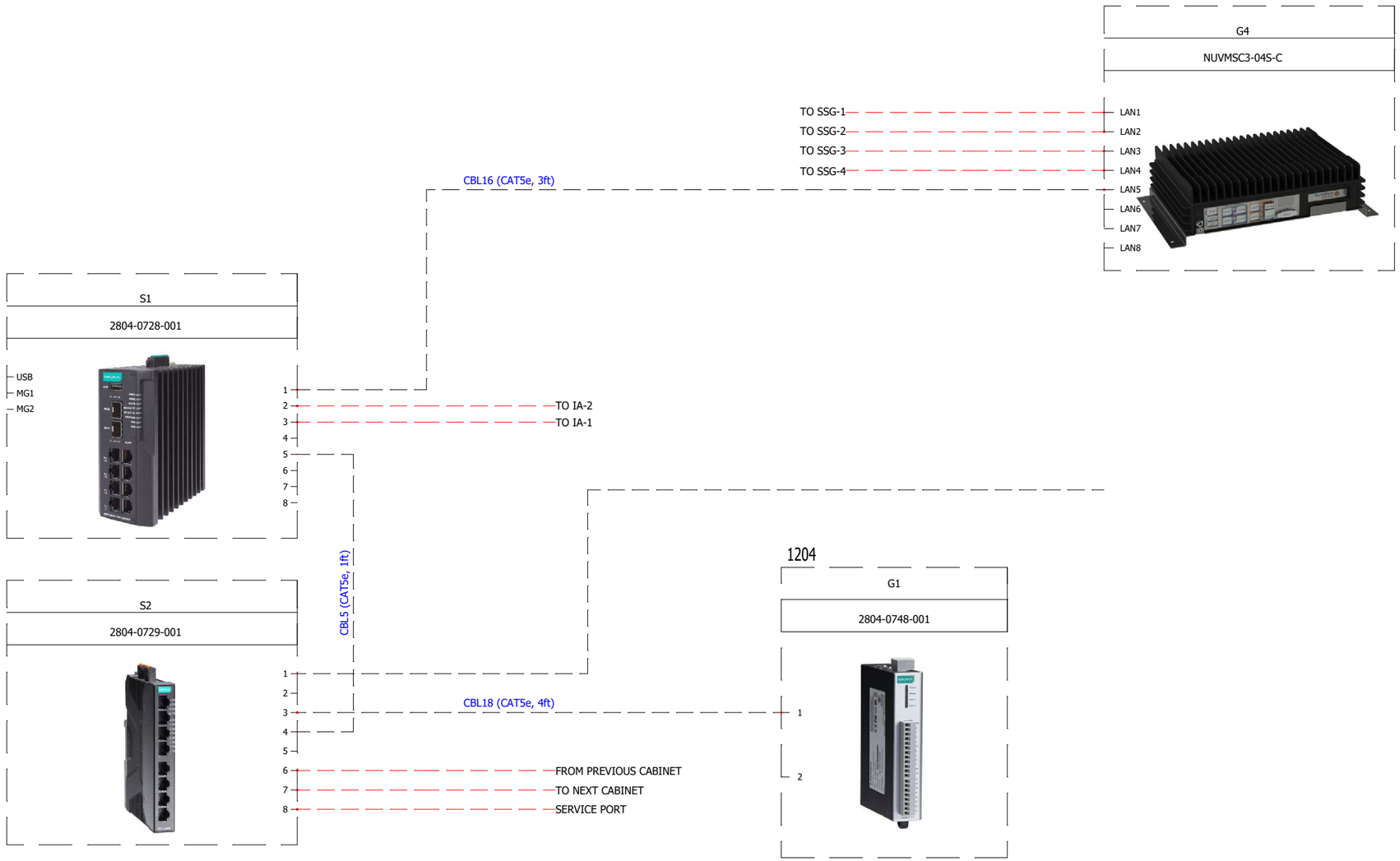

MSiTEC
PRODUCTIVITY THROUGH TECHNOLOGY

(866) 397 - 7388
www.msitec.com
Offices: AZ, CA, CO

TITLE: R3DI Master Control Panel

Customer:

PROPRIETARY AND CONFIDENTIAL

THE INFORMATION CONTAINED IN THIS DOCUMENT IS THE SOLE PROPERTY OF MSI TEC, INC. ANY REPRODUCTION IN PART OR AS A WHOLE WITHOUT THE WRITTEN PERMISSION OF MSI TEC, INC IS PROHIBITED.

SIZE B

DWG. NO. 09-1427-001

REVISION 2.0

Document realized with version : 2026.0.0.5070
SOLIDWORKS Electrical

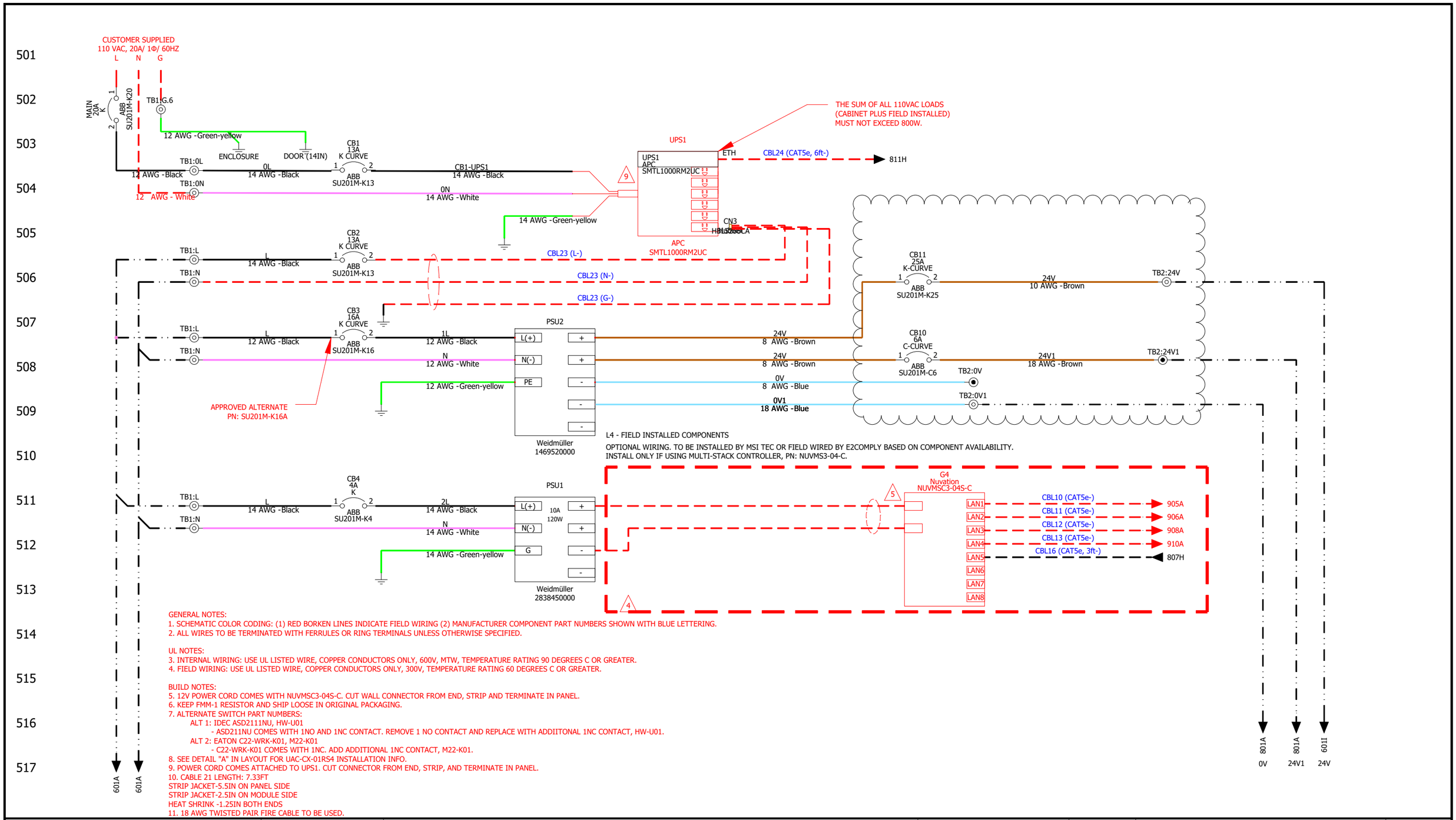

GENERAL NOTES:
1. SCHEMATIC COLOR CODING: (1) RED BORKEN LINES INDICATE FIELD WIRING (2) MANUFACTURER COMPONENT PART NUMBERS SHOWN WITH BLUE LETTERING.
2. ALL WIRES TO BE TERMINATED WITH FERRULES OR RING TERMINALS UNLESS OTHERWISE SPECIFIED.

UL NOTES:
3. INTERNAL WIRING: USE UL LISTED WIRE, COPPER CONDUCTORS ONLY, 600V, MTW, TEMPERATURE RATING 90 DEGREES C OR GREATER.
4. FIELD WIRING: USE UL LISTED WIRE, COPPER CONDUCTORS ONLY, 300V, TEMPERATURE RATING 60 DEGREES C OR GREATER.

BUILD NOTES:
5. 12V POWER CORD COMES WITH NUVMSC3-04S-C. CUT WALL CONNECTOR FROM END, STRIP AND TERMINATE IN PANEL.
6. KEEP FMM-1 RESISTOR AND SHIP LOOSE IN ORIGINAL PACKAGING.
7. ALTERNATE SWITCH PART NUMBERS:
ALT 1: IDEC ASD2111NU, HW-U01
- ASD211NU COMES WITH 1NO AND 1NC CONTACT. REMOVE 1 NO CONTACT AND REPLACE WITH ADDIITONAL 1NC CONTACT, HW-U01.
ALT 2: EATON C22-WRK-K01, M22-K01
- C22-WRK-K01 COMES WITH 1NC. ADD ADDITIONAL 1NC CONTACT, M22-K01.
8. SEE DETAIL "A" IN LAYOUT FOR UAC-CX-01RS4 INSTALLATION INFO.
9. POWER CORD COMES ATTACHED TO UPS1. CUT CONNECTOR FROM END, STRIP, AND TERMINATE IN PANEL.
10. CABLE 21 LENGTH: 7.33FT
STRIP JACKET-5.5IN ON PANEL SIDE
STRIP JACKET-2.5IN ON MODULE SIDE
HEAT SHRINK -1.25IN BOTH ENDS
11. 18 AWG TWISTED PAIR FIRE CABLE TO BE USED.

MSITEC
PRODUCTIVITY THROUGH TECHNOLOGY

(866) 397 - 7388
www.msitec.com
Offices: AZ, CA, CO

TITLE: R3DI Master Control Panel

Customer:

PROPRIETARY AND CONFIDENTIAL

THE INFORMATION CONTAINED IN THIS DOCUMENT IS THE SOLE PROPERTY OF MSI TEC, INC. ANY REPRODUCTION IN PART OR AS A WHOLE WITHOUT THE WRITTEN PERMISSION OF MSI TEC, INC IS PROHIBITED.

SIZE B

DWG. NO. 09-1427-001

REVISION 2.0

SHEET 5 OF 14

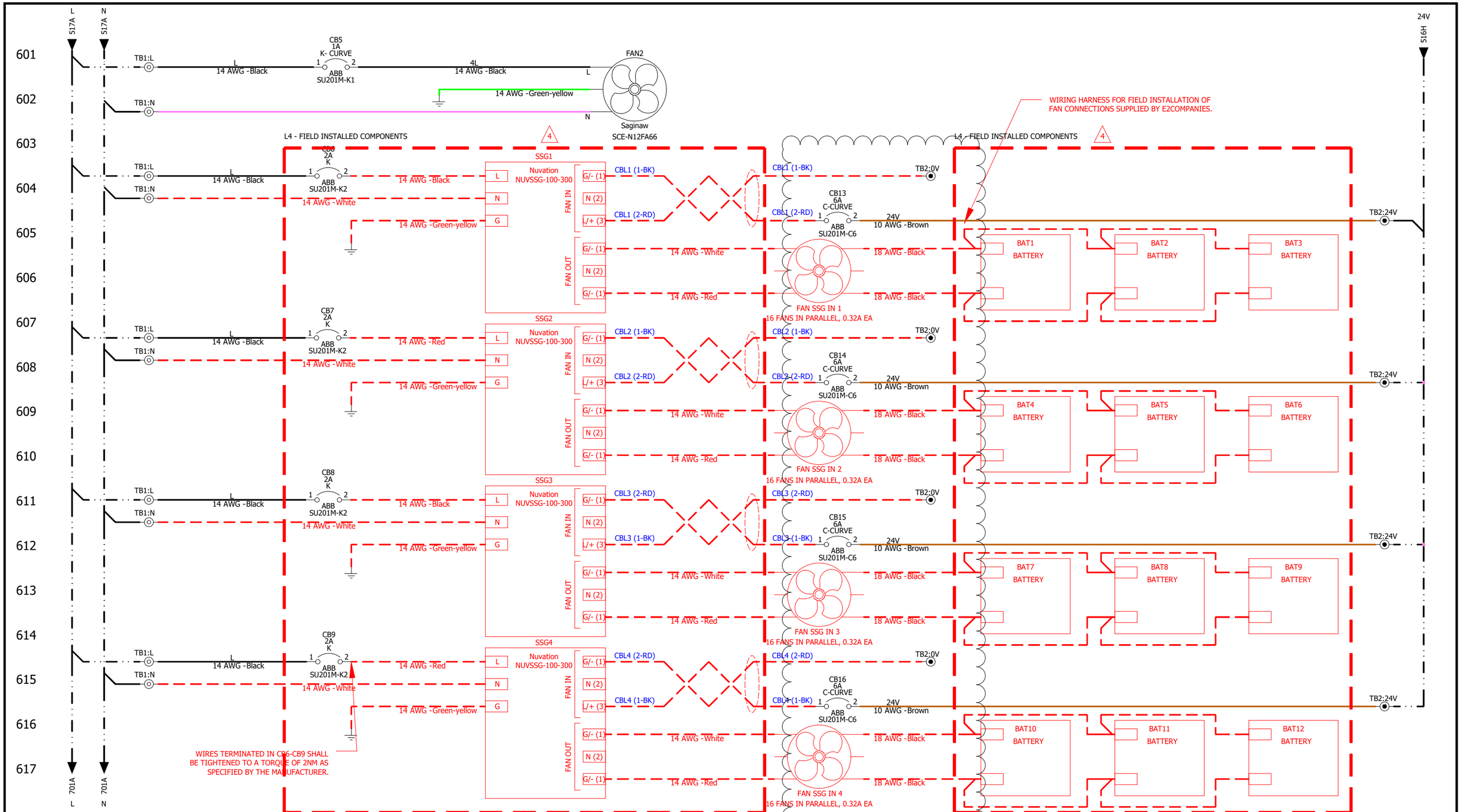

MSITEC
PRODUCTIVITY THROUGH TECHNOLOGY

(866) 397 - 7388
www.msitec.com
Offices: AZ, CA, CO

TITLE: R3DI Master Control Panel

Customer:

PROPRIETARY AND CONFIDENTIAL
THE INFORMATION CONTAINED IN THIS DOCUMENT IS THE SOLE PROPERTY OF MSI TEC, INC. ANY REPRODUCTION IN PART OR AS A WHOLE WITHOUT THE WRITTEN PERMISSION OF MSI TEC, INC IS PROHIBITED.

SIZE B

DWG. NO. 09-1427-001

REVISION 2.0

SHEET 6 OF 14

Document realized with version : 2026.0.0.5070
SOLIDWORKS Electrical

A B C D E F G H

701 702 703 704 705 706 707 708 709 710 711 712 713 714 715 716 717

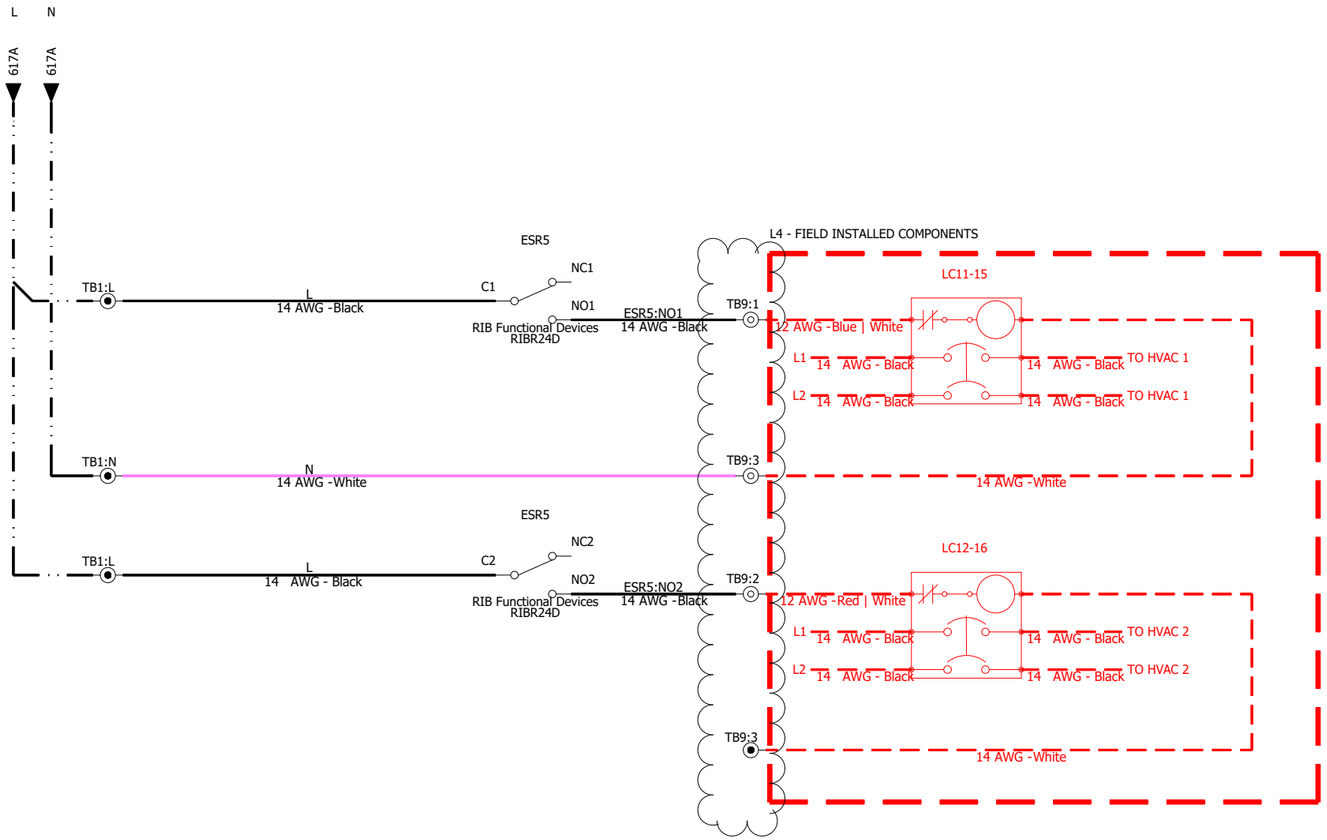

MSiTEC
PRODUCTIVITY THROUGH TECHNOLOGY

(866) 397 - 7388
www.msitec.com
Offices: AZ, CA, CO

TITLE: R3DI Master Control Panel

Customer:

PROPRIETARY AND CONFIDENTIAL

THE INFORMATION CONTAINED IN THIS DOCUMENT IS THE SOLE PROPERTY OF MSI TEC, INC. ANY REPRODUCTION IN PART OR AS A WHOLE WITHOUT THE WRITTEN PERMISSION OF MSI TEC, INC IS PROHIBITED.

SIZE B

DWG. NO. 09-1427-001

REVISION 2.0

SHEET 7 OF 14

Document realized with version : 2026.0.0.5070
SOLIDWORKS Electrical

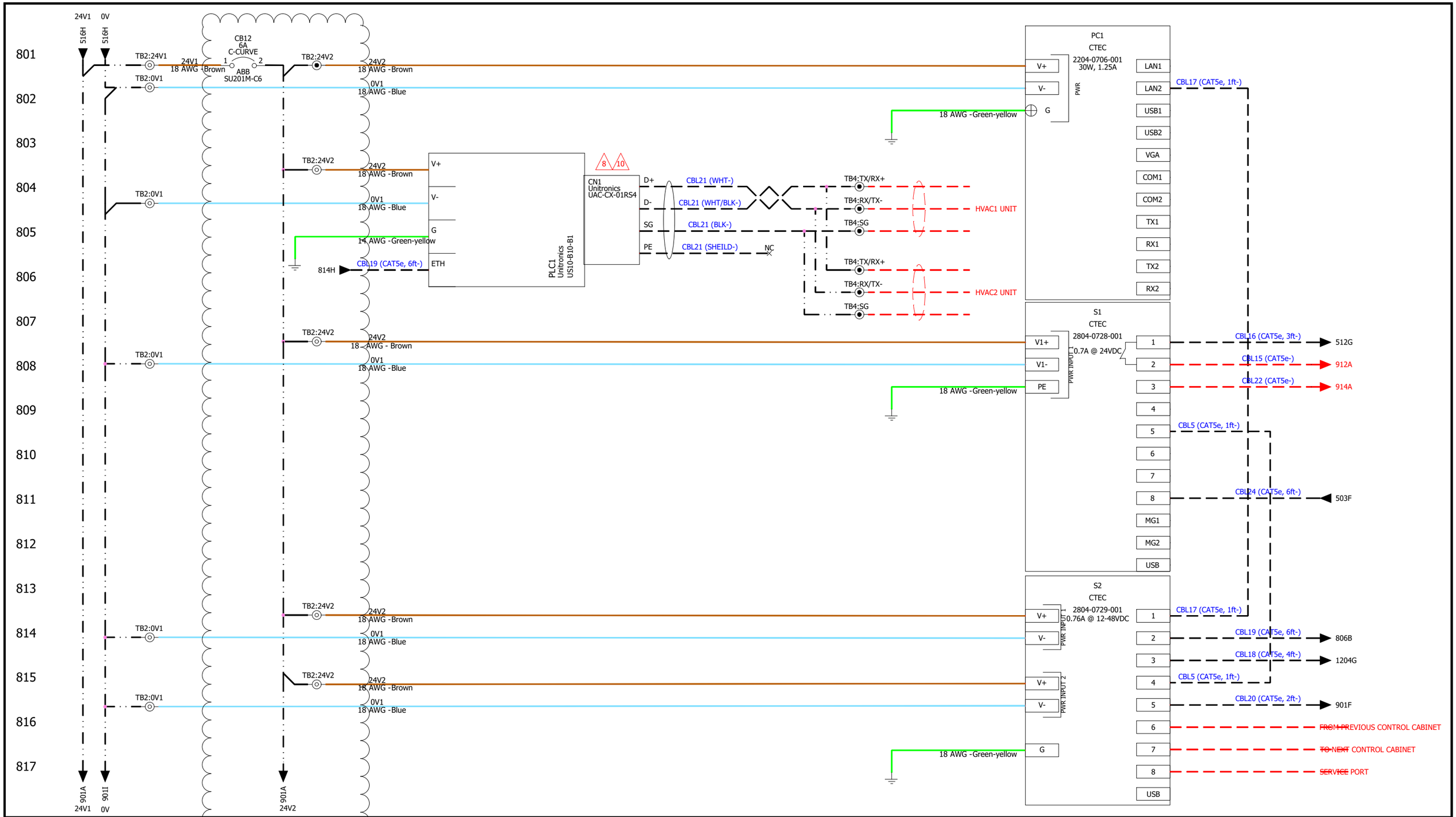

MSITEC
PRODUCTIVITY THROUGH TECHNOLOGY

(866) 397 - 7388
www.msitec.com
Offices: AZ, CA, CO

TITLE: R3DI Master Control Panel

Customer:

PROPRIETARY AND CONFIDENTIAL

THE INFORMATION CONTAINED IN THIS DOCUMENT IS THE SOLE PROPERTY OF MSI TEC, INC. ANY REPRODUCTION IN PART OR AS A WHOLE WITHOUT THE WRITTEN PERMISSION OF MSI TEC, INC IS PROHIBITED.

SIZE B

DWG. NO. 09-1427-001

REVISION 2.0

SHEET 8 OF 14

Document realized with version : 2026.0.0.5070
SOLIDWORKS Electrical

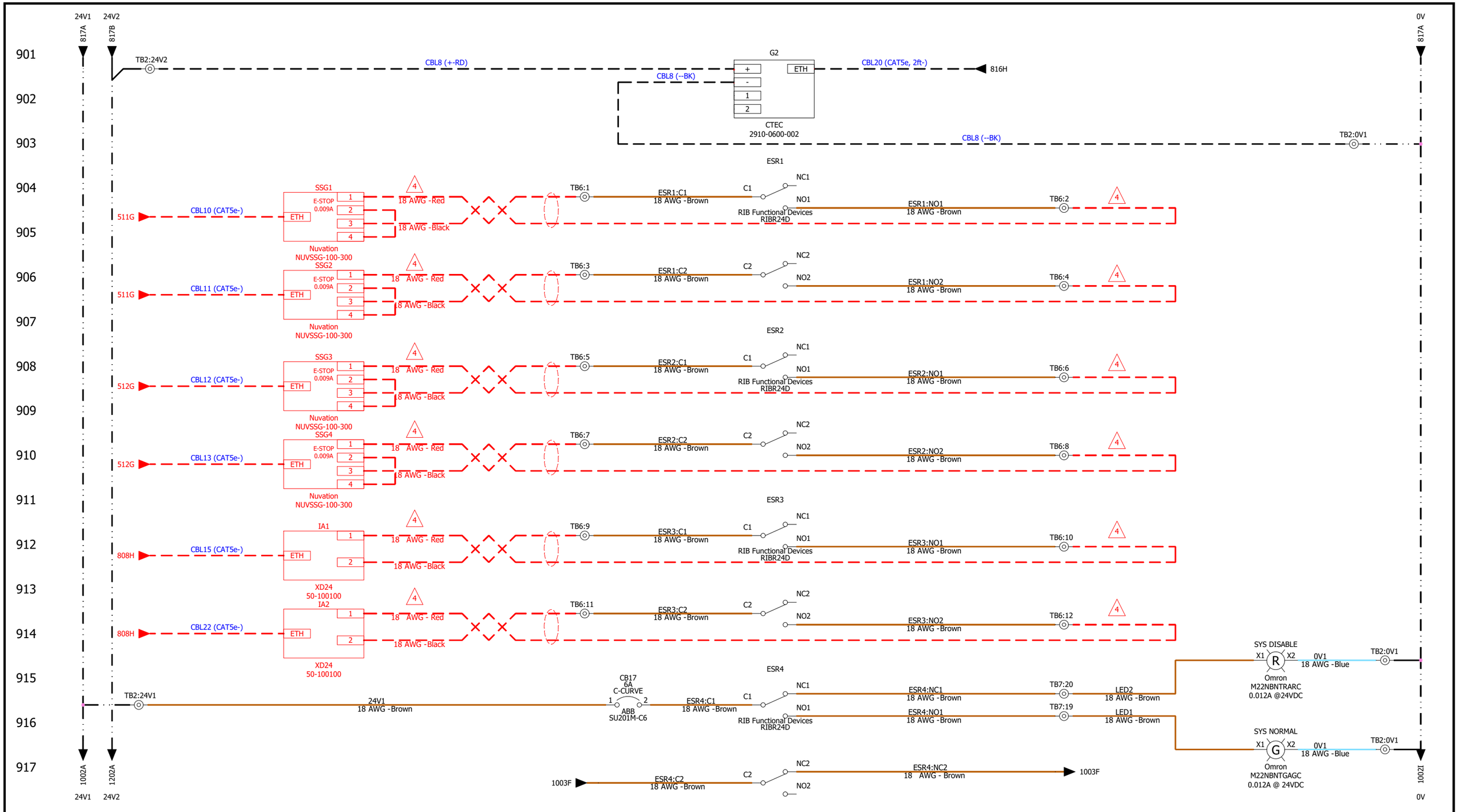

MSiTEC PRODUCTIVITY THROUGH TECHNOLOGY	(866) 397 - 7388 www.msitec.com Offices: AZ, CA, CO	TITLE: R3DI Master Control Panel Customer:	PROPRIETARY AND CONFIDENTIAL THE INFORMATION CONTAINED IN THIS DOCUMENT IS THE SOLE PROPERTY OF MSI TEC, INC. ANY REPRODUCTION IN PART OR AS A WHOLE WITHOUT THE WRITTEN PERMISSION OF MSI TEC, INC IS PROHIBITED.	SIZE B	DWG. NO. 09-1427-001	REVISION 2.0 SHEET 9 OF 14

Document realized with version : 2026.0.0.5070
SOLIDWORKS Electrical

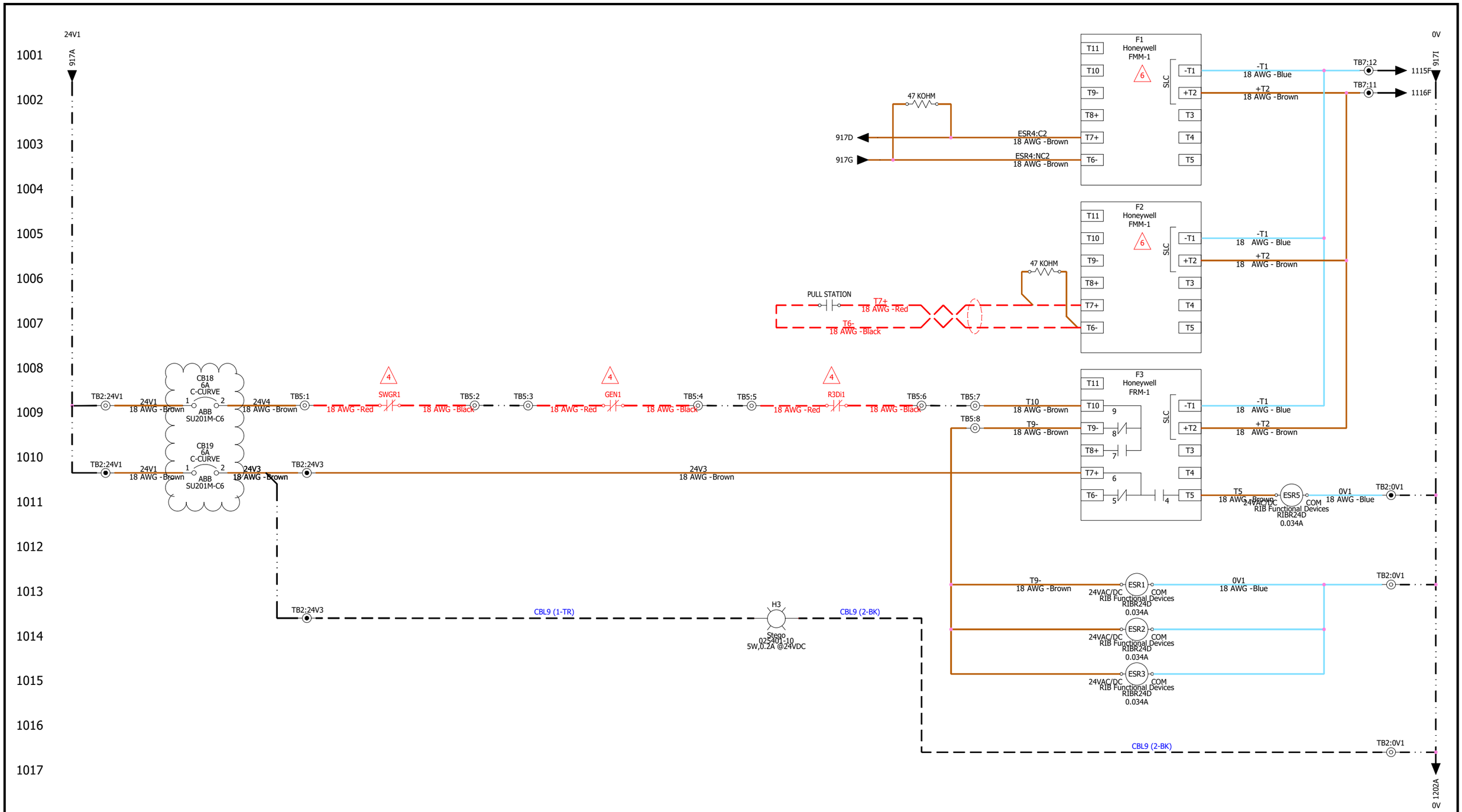

MSiTEC
PRODUCTIVITY THROUGH TECHNOLOGY

(866) 397 - 7388
www.msitec.com
Offices: AZ, CA, CO

TITLE: R3DI Master Control Panel

Customer:

PROPRIETARY AND CONFIDENTIAL

THE INFORMATION CONTAINED IN THIS DOCUMENT IS THE SOLE PROPERTY OF MSI TEC, INC. ANY REPRODUCTION IN PART OR AS A WHOLE WITHOUT THE WRITTEN PERMISSION OF MSI TEC, INC IS PROHIBITED.

SIZE B

DWG. NO. 09-1427-001

REVISION 2.0

SHEET 10 OF 14

Document realized with version : 2026.0.0.5070
SOLIDWORKS Electrical

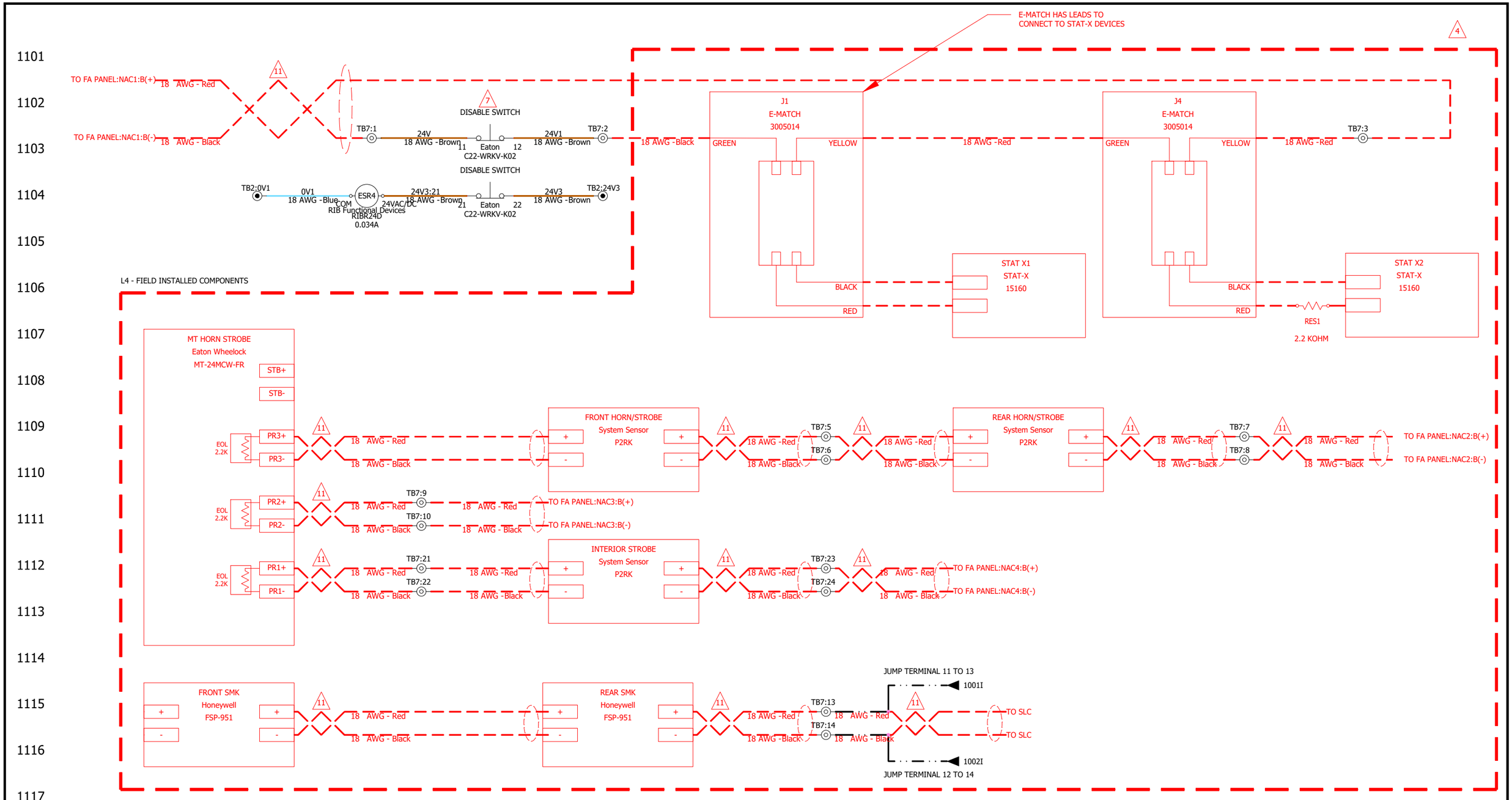

MSITEC
PRODUCTIVITY THROUGH TECHNOLOGY

(866) 397 - 7388
www.msitec.com
Offices: AZ, CA, CO

TITLE: R3DI Master Control Panel

Customer:

PROPRIETARY AND CONFIDENTIAL

THE INFORMATION CONTAINED IN THIS DOCUMENT IS THE SOLE PROPERTY OF MSI TEC, INC. ANY REPRODUCTION IN PART OR AS A WHOLE WITHOUT THE WRITTEN PERMISSION OF MSI TEC, INC IS PROHIBITED.

SIZE B

DWG. NO. 09-1427-001

REVISION 2.0

SHEET 11 OF 14

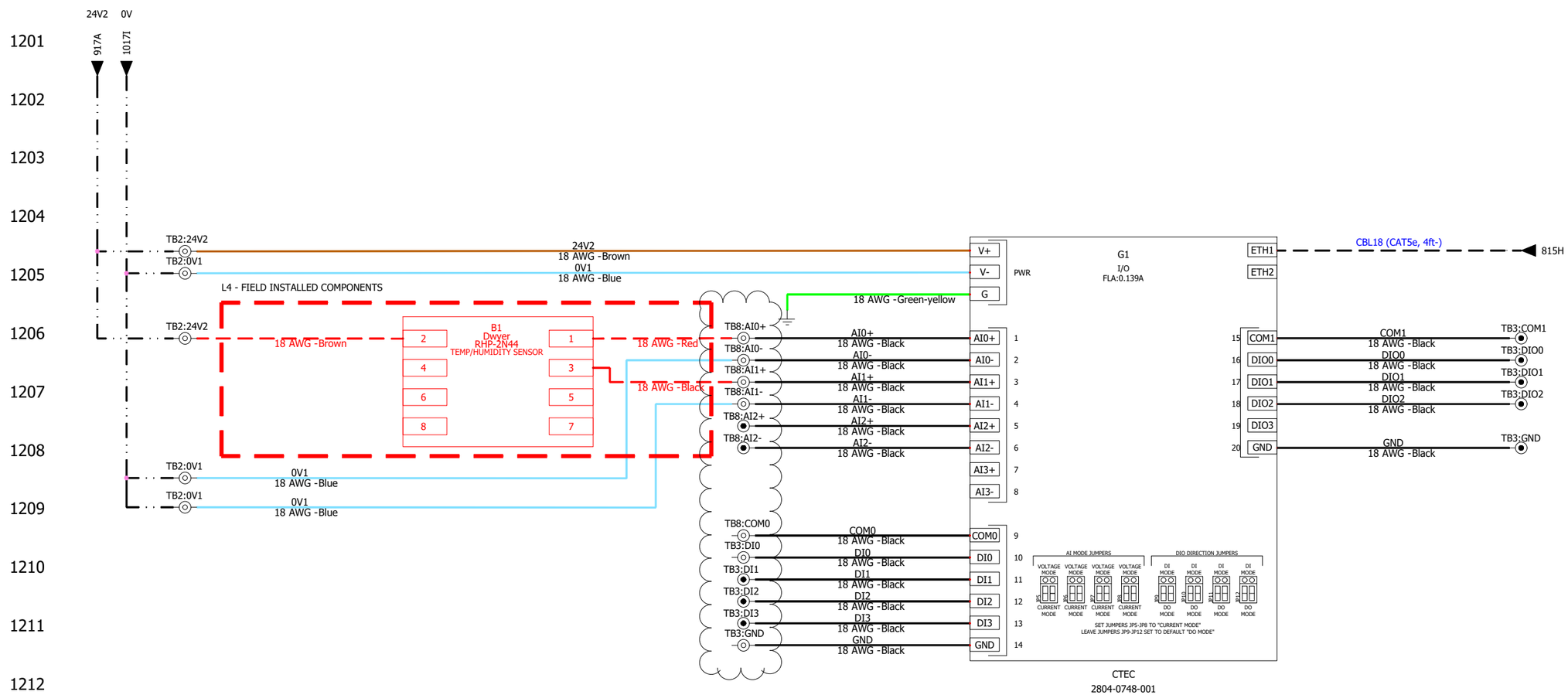

MSiTEC
PRODUCTIVITY THROUGH TECHNOLOGY

(866) 397 - 7388
www.msitec.com
Offices: AZ, CA, CO

TITLE: R3DI Master Control Panel

Customer:

PROPRIETARY AND CONFIDENTIAL

THE INFORMATION CONTAINED IN THIS DOCUMENT IS THE SOLE PROPERTY OF MSI TEC, INC. ANY REPRODUCTION IN PART OR AS A WHOLE WITHOUT THE WRITTEN PERMISSION OF MSI TEC, INC IS PROHIBITED.

SIZE B

DWG. NO. 09-1427-001

REVISION 2.0

SHEET 12 OF 14

Document realized with version : 2026.0.0.5070
SOLIDWORKS Electrical

3

Mark	Manufacturer	Reference	Description
CBL5		CAT5e, 1ft	
CBL8	Microhard	MHS841420	4-pin power cable
CBL16		CAT5e, 3ft	
CBL17		CAT5e, 1ft	
CBL18		CAT5e, 4ft	
CBL19		CAT5e, 6ft	
CBL20		CAT5e, 2ft	
CBL23	Southwire	SJOOW-14-3BK-1	14 AWG, SJOOW, 300V, 90 DEGREES C
CBL24		CAT5e, 6ft	

18717

Mark	Manufacturer	Reference	Description
CBL1	Southwire	18 SOL C 2/C OAS CMP/CL3P/FPLP PVC RED 1000FT	18 SOL C 2/C OAS CMP/CL3P/FPLP PVC RED 1000FT
CBL2	Southwire	18 SOL C 2/C OAS CMP/CL3P/FPLP PVC RED 1000FT	18 SOL C 2/C OAS CMP/CL3P/FPLP PVC RED 1000FT
CBL3	Southwire	18 SOL C 2/C OAS CMP/CL3P/FPLP PVC RED 1000FT	18 SOL C 2/C OAS CMP/CL3P/FPLP PVC RED 1000FT
CBL4	Southwire	18 SOL C 2/C OAS CMP/CL3P/FPLP PVC RED 1000FT	18 SOL C 2/C OAS CMP/CL3P/FPLP PVC RED 1000FT
CBL10		CAT5e	
CBL11		CAT5e	
CBL12		CAT5e	
CBL13		CAT5e	
CBL14		CAT5e	

PROPRIETARY AND CONFIDENTIAL

THE INFORMATION CONTAINED IN THIS DOCUMENT IS THE SOLE PROPERTY OF MSI TEC, INC. ANY REPRODUCTION IN PART OR AS A WHOLE WITHOUT THE WRITTEN PERMISSION OF MSI TEC, INC IS PROHIBITED.

-> 18717

Mark	Manufacturer	Reference	Description
CBL15		CAT5e	
CBL22		CAT5e	

19093

Mark	Manufacturer	Reference	Description
CBL9	Belden	BEL8760	18 AWG stranded (16x30) tinned copper conductors, polyethylene insulation, twisted pair, overall Beldfoil® shield (100% coverage), 20 AWG stranded tinned copper drain wire, PVC jacket.
CBL21	Quabbin	8304	Multipair RS-485 24 AWG, 2 pair, shielded, PVC, Chrome Gray

PROPRIETARY AND CONFIDENTIAL

THE INFORMATION CONTAINED IN THIS DOCUMENT IS THE SOLE PROPERTY OF MSI TEC, INC. ANY REPRODUCTION IN PART OR AS A WHOLE WITHOUT THE WRITTEN PERMISSION OF MSI TEC, INC IS PROHIBITED.