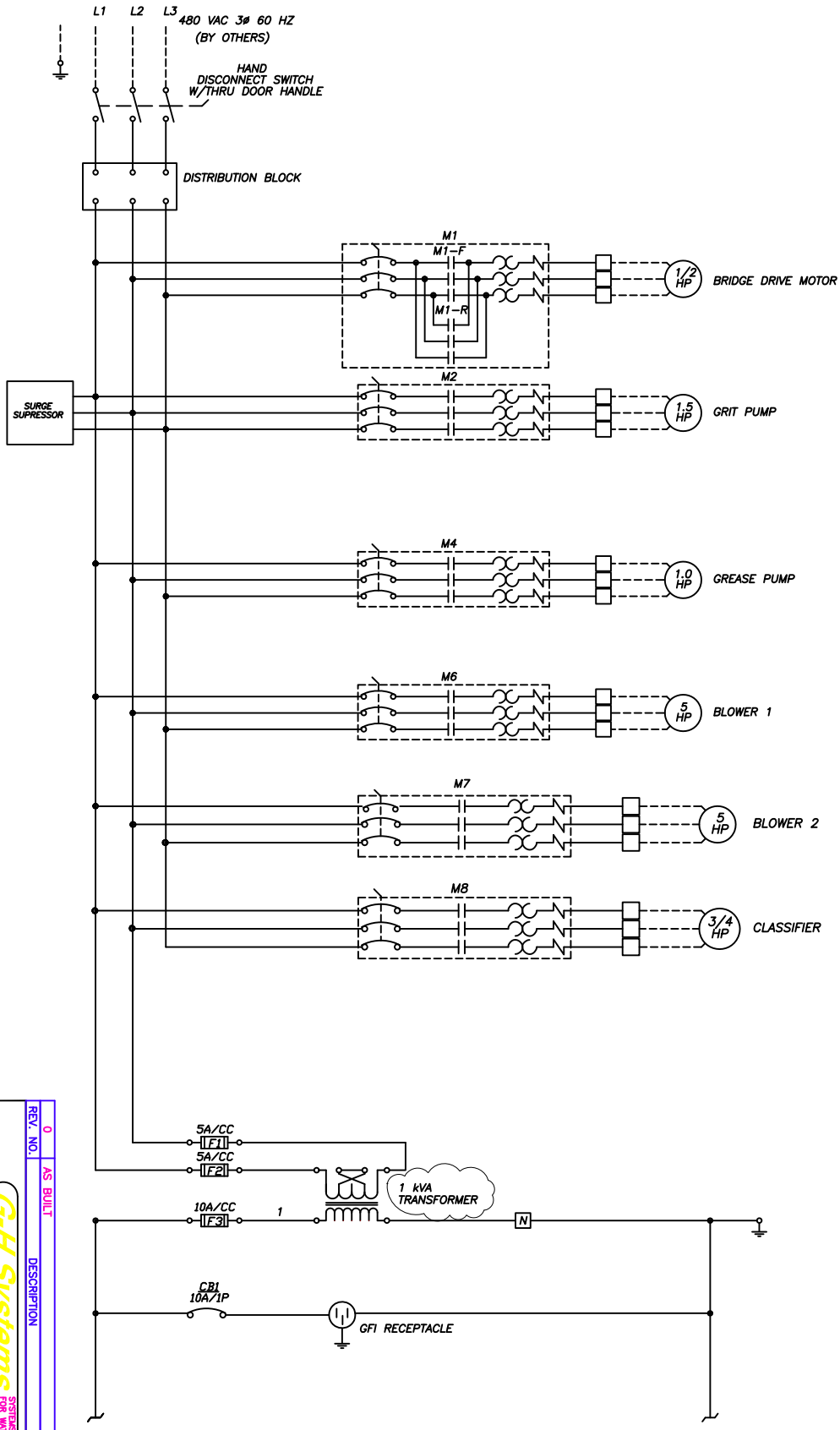

REV. NO.	DESCRIPTION	DATE	DRN	CHK
0	AS BUILT	05/01/01	GU	

G-H Systems
SYSTEMS FOR WATER AND WASTEWATER TREATMENT

10805 METRIC BLVD. - AUSTIN, TEXAS - 78758
TELEPHONE: (512) 836-3883 - FAX: (512) 836-4441

THIS DRAWING AND ALL INFORMATION CONTAINED HEREIN IS THE PROPERTY OF G-H SYSTEMS, INC. REPRODUCTION OR DISCLOSURE OF THE DESIGN OR THE PURCHASE OF ONLY WITH THE EXPRESS-ED WRITTEN PERMISSION OF G-H SYSTEMS MANUFACTURE EQUIPMENT.

REPUBLIC, MO
WASTEWATERWATER TREATMENT PLANT
GRIT & GREASE COLLECTOR CONTROL PANEL
ELECTRICAL WIRING DIAGRAM

DRAWN BY: RM DATE: 06/30/00
APPV'D. BY: GU DATE: 09/15/00
SCALE: NTS JOB NO: 00-665
FILE: 00665-07 DWG. NO: 07-01-1
SHT 1 OF 9
REV. 0

B

CP-1768

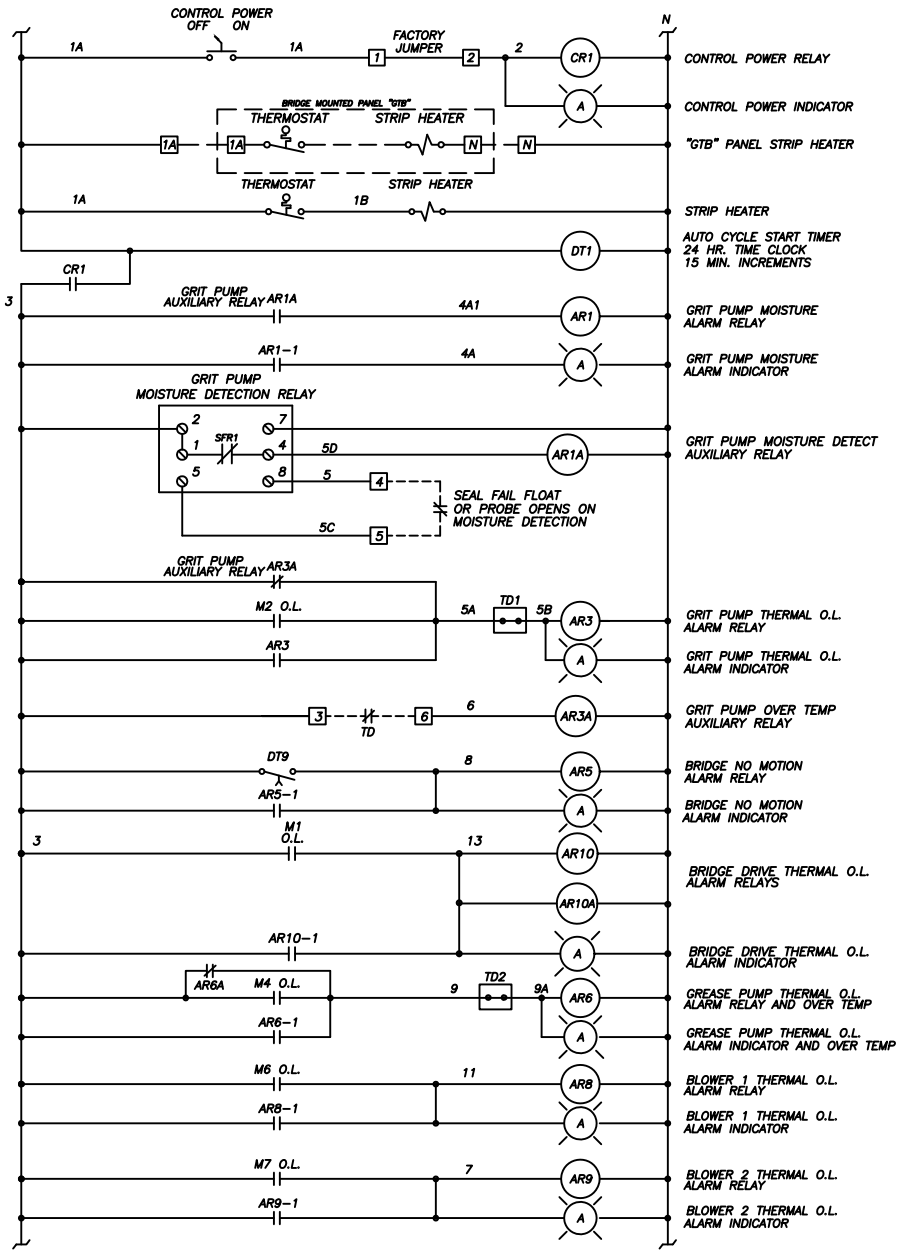

NOTES:

OTLS – BRIDGE OVERTRAVEL LIMIT SWITCH

ATLS – ADVANCE TRAVEL LIMIT SWITCH

RTLS – RETURN TRAVEL LIMIT SWITCH

– – – – – – – DENOTES FIELD WIRING BY OTHERS

— — — — DENOTES LOCATION IN GTB PANEL

G-H SYSTEMS RESERVES THE RIGHT TO MODIFY THE SCHEMATIC AND/OR PANEL LAYOUT AS REQUIRED FOR PROPER OPERATION.

REV. NO.	DESCRIPTION	DATE	DRN	CHK
0	AS BUILT	05/01/01	GLL	

G-H Systems
SYSTEMS FOR WATER AND WASTEWATER TREATMENT
10805 METRIC BLVD. – AUSTIN, TEXAS – 78758
TELEPHONE: (512) 836-3883 – FAX: (512) 836-4441

THIS DRAWING AND ALL INFORMATION CONTAINED HEREIN IS THE PROPERTY OF G-H SYSTEMS, INC. REPRODUCTION OR TRANSFER TO THIRD PARTIES IS PROHIBITED ONLY WITH THE EXPRESS-ED WRITTEN PERMISSION OF G-H SYSTEMS MANUFACTURE.

REPUBLIC, MO
WASTEWATERWATER TREATMENT PLANT
GRIT & GREASE COLLECTOR CONTROL PANEL
ELECTRICAL WIRING DIAGRAM

DRAWN BY: RM DATE: 06/30/00 SHT 2 OF 9
APV'D. BY: GU DATE: 09/15/00
SCALE: NTS JOB NO: 00-665
FILE: 00665-07 DWG. NO: 07-01-1
REV. 0

B

CP-1768

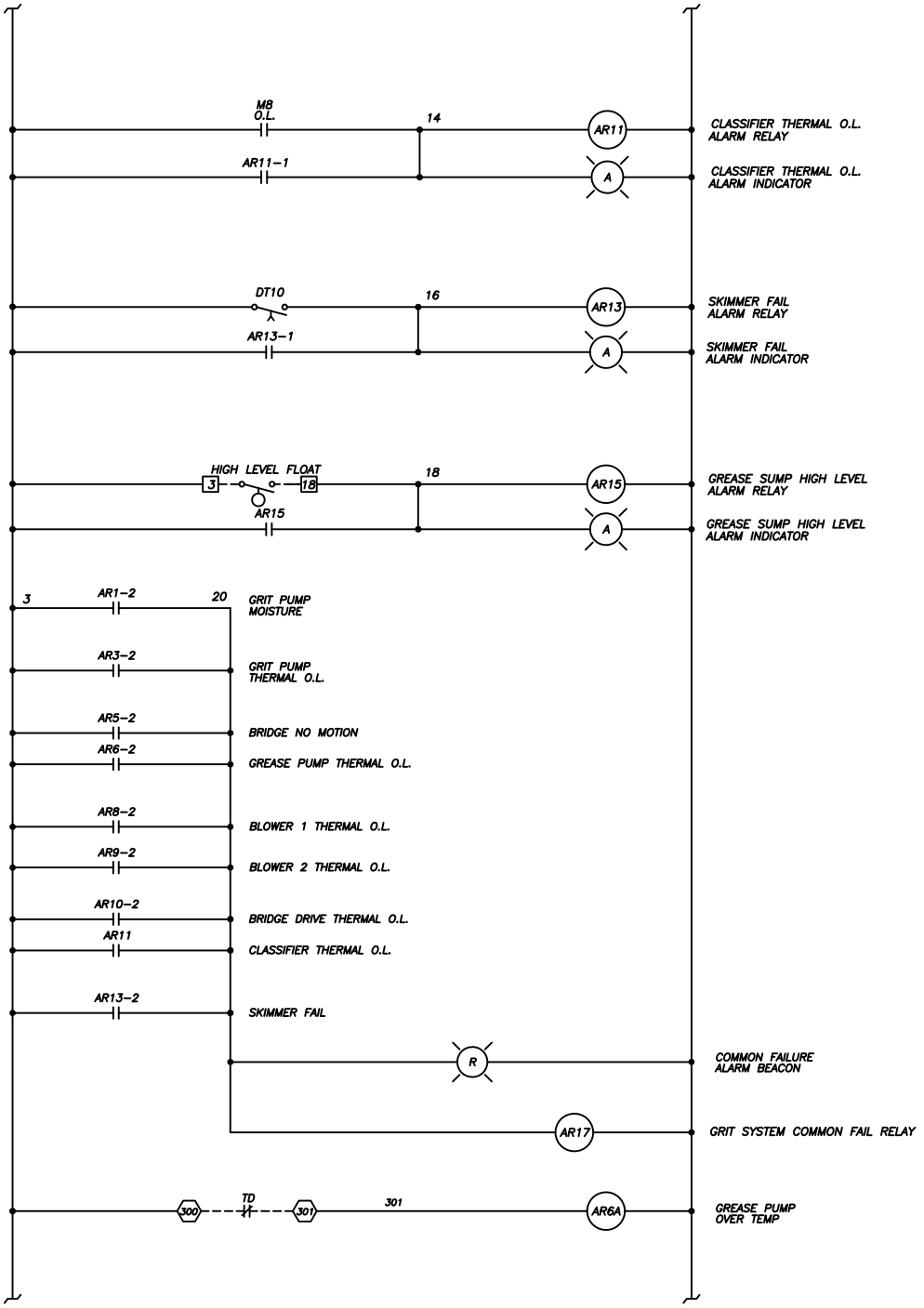

CP-1768

REV. NO.	DESCRIPTION	DATE	DRN	CHK
0	AS BUILT	05/01/01	GLL	

G-H Systems
SYSTEMS FOR WATER AND WASTEWATER TREATMENT

10805 METRIC BLVD. - AUSTIN, TEXAS - 78758
TELEPHONE: (512) 836-3883 - FAX: (512) 836-4441

THIS DRAWING AND ALL INFORMATION CONTAINS PROPRIETARY COPYRIGHT SYSTEMS, INC. REPRODUCTION THE "DESIGN" OR PURCHASE OF ONLY WITH THE EXPRESS EQUIPMENT MANUFACTURE.

REPUBLIC, MO
WASTEWATERWATER TREATMENT PLANT
GRIT & GREASE COLLECTOR CONTROL PANEL
ELECTRICAL WIRING DIAGRAM

DRAWN BY: RM DATE: 06/30/00 SHT 3 OF 9
APPV'D. BY: GU DATE: 09/15/00
SCALE: NTS JOB NO: 00-665
FILE: 00665-07 DWG. NO: 07-01-1

B

REV. 0

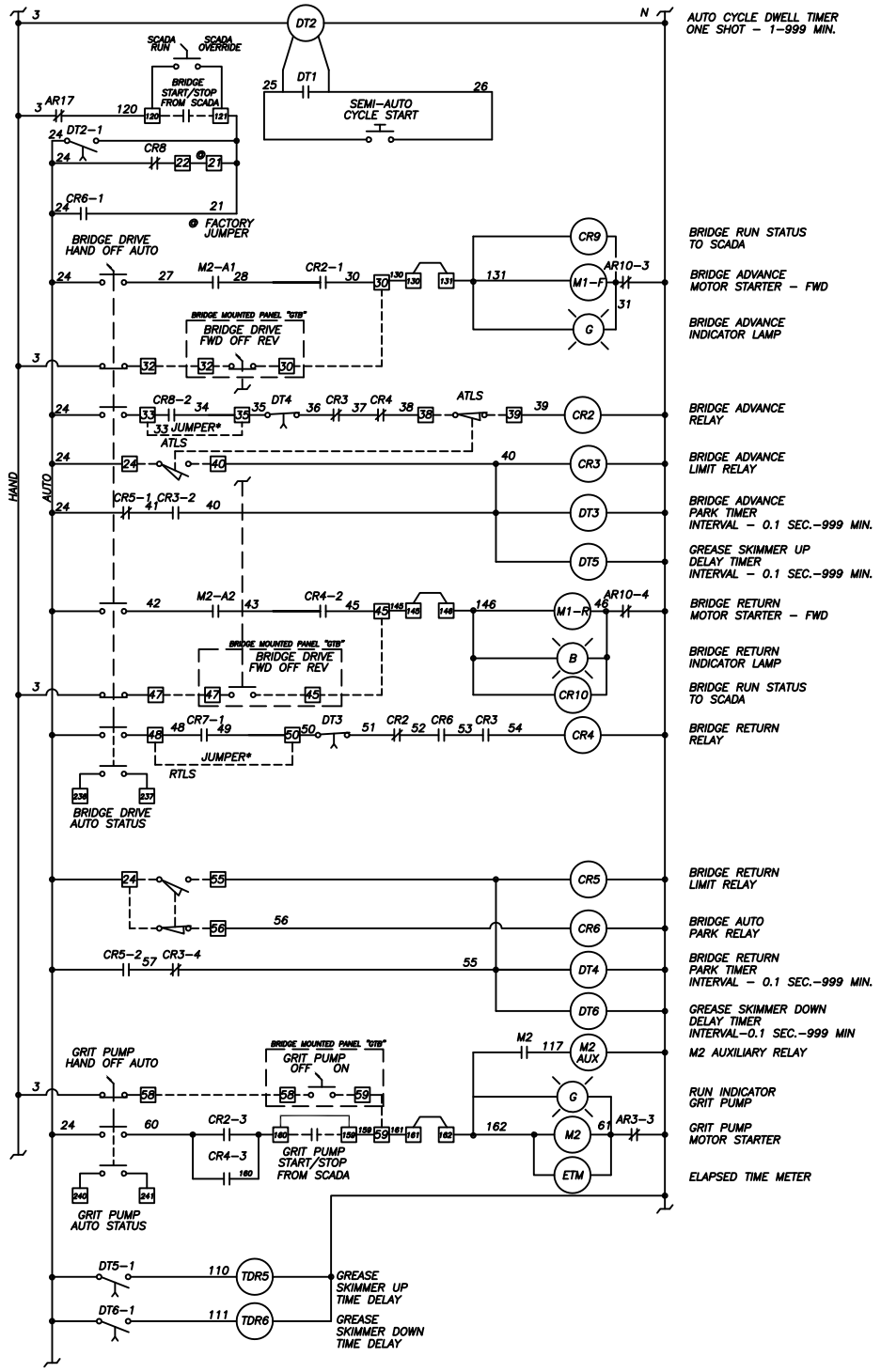

*MAINTENANCE NOTE: INSERT JUMPER IN THIS LOCATION TO OPERATE BRIDGE IN AUTO MODE WITHOUT SKIMMER(S). (JUMPER NOT FURNISHED)

CP–1768

REV. NO.	DESCRIPTION	DATE	DRN	CHK
0	AS BUILT	05/01/01	GLL	

G-H Systems
SYSTEMS FOR WATER AND WASTEWATER TREATMENT

10805 METRIC BLVD. – AUSTIN, TEXAS – 78758
TELEPHONE: (512) 836–3883 – FAX: (512) 836–4441

THIS DRAWING AND ALL INFORMATION CONTAINED THEREON IS PROPERTY OF G-H SYSTEMS, INC. REPRODUCTION OR USE FOR PURPOSES OF THE DESIGN, BUILDING OR OPERATION OF EQUIPMENT MANUFACTURE ONLY WITH THE EXPRESS PERMISSION OF G-H SYSTEMS, INC.

REPUBLIC, MO
WASTEWATERWATER TREATMENT PLANT
GRIT & GREASE COLLECTOR CONTROL PANEL
ELECTRICAL WIRING DIAGRAM

DRAWN BY: RM DATE: 06/30/00
APPV'D. BY: GU DATE: 09/15/00
SCALE: NTS JOB NO: 00–665
FILE: 00665–07 DWG. NO: 07–01–1
SHT 4 OF 9
REV. 0

B

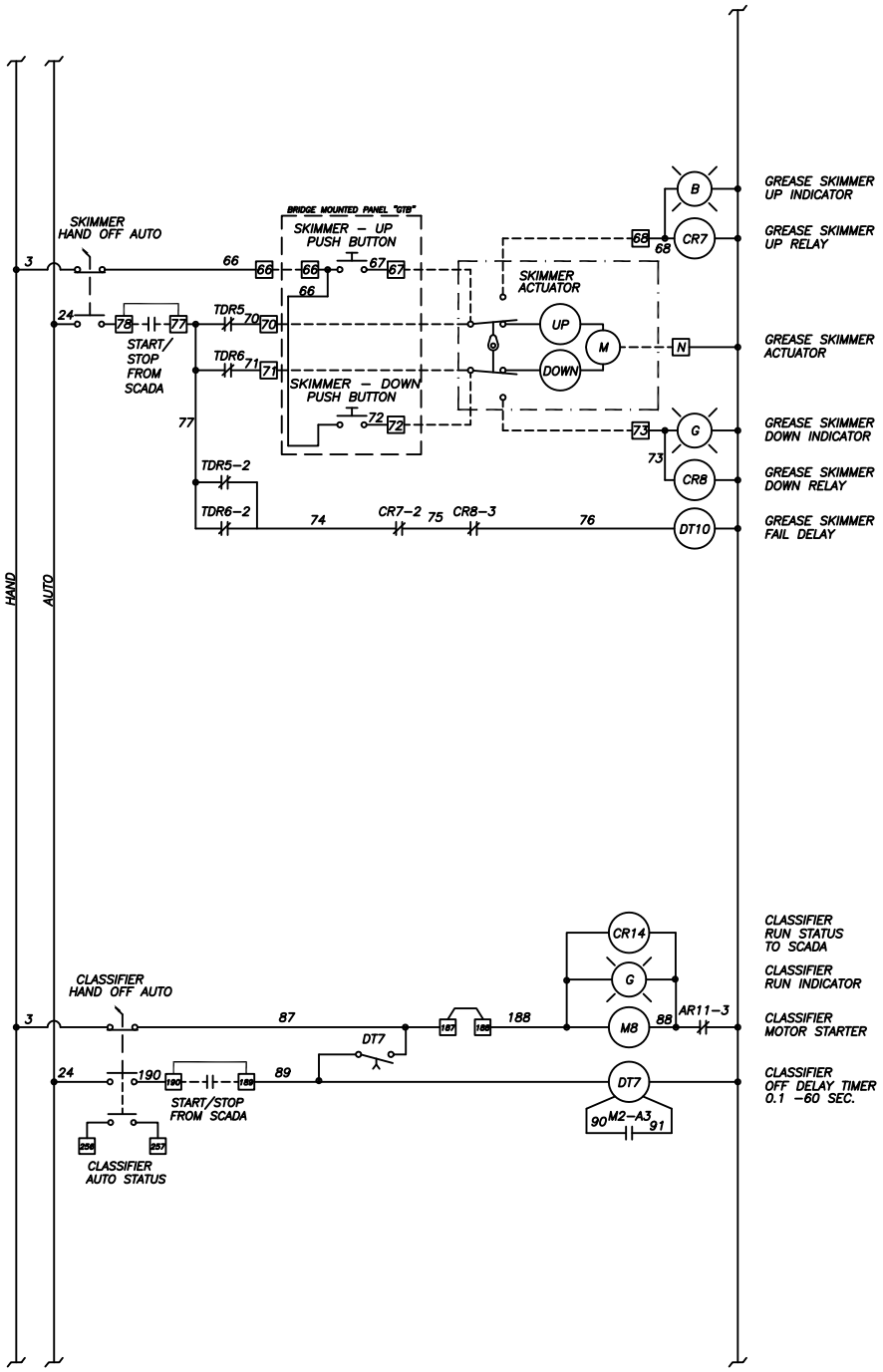

CP-1768

REV. NO.	DESCRIPTION	DATE	DRN	CHK
0	AS BUILT	05/01/01	GU	

G-H Systems
SYSTEMS FOR WATER AND WASTEWATER TREATMENT

10805 METRIC BLVD. – AUSTIN, TEXAS – 78758
TELEPHONE: (512) 836-3883 – FAX: (512) 836-4441

THIS DRAWING AND ALL INFORMATION CONTAINED THEREON IS THE PROPERTY OF G-H SYSTEMS, INC. REPRODUCTION OR DISCLOSURE OF THE DESIGN OR THE PURPOSE ONLY WITH THE EXPRESS-ED APPROVAL MANUFACTURE.

REPUBLIC, MO
WASTEWATERWATER TREATMENT PLANT
GRIT & GREASE COLLECTOR CONTROL PANEL
ELECTRICAL WIRING DIAGRAM

DRAWN BY: RM DATE: 06/30/00 SHT 5 OF 9
APPV'D. BY: GU DATE: 09/15/00
SCALE: NTS JOB NO: 00-665
FILE: 00665-07 DWG. NO: 07-01-1

B REV. 0

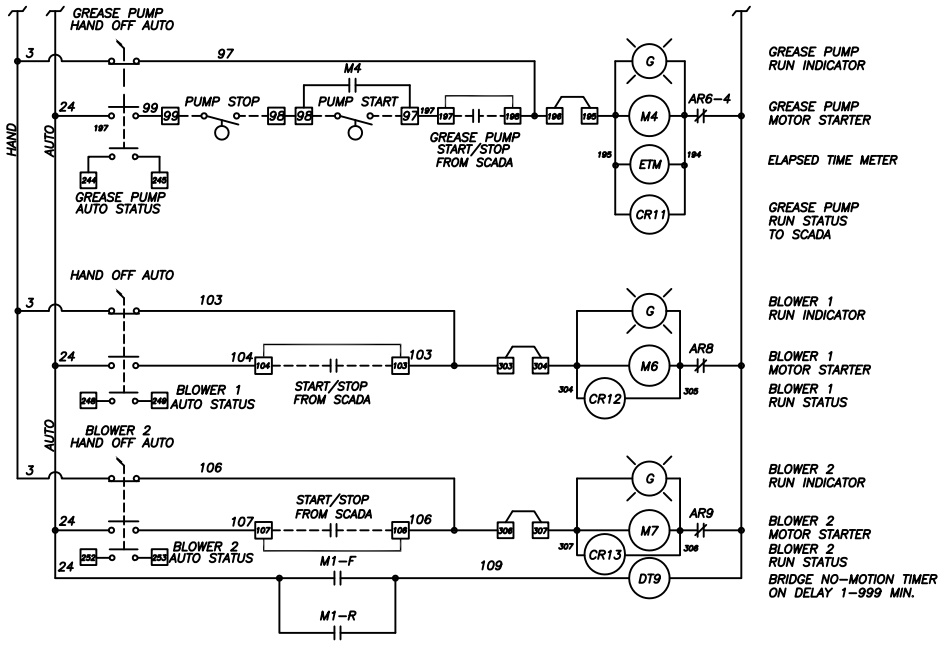

AUX. ALARM CONTACTS

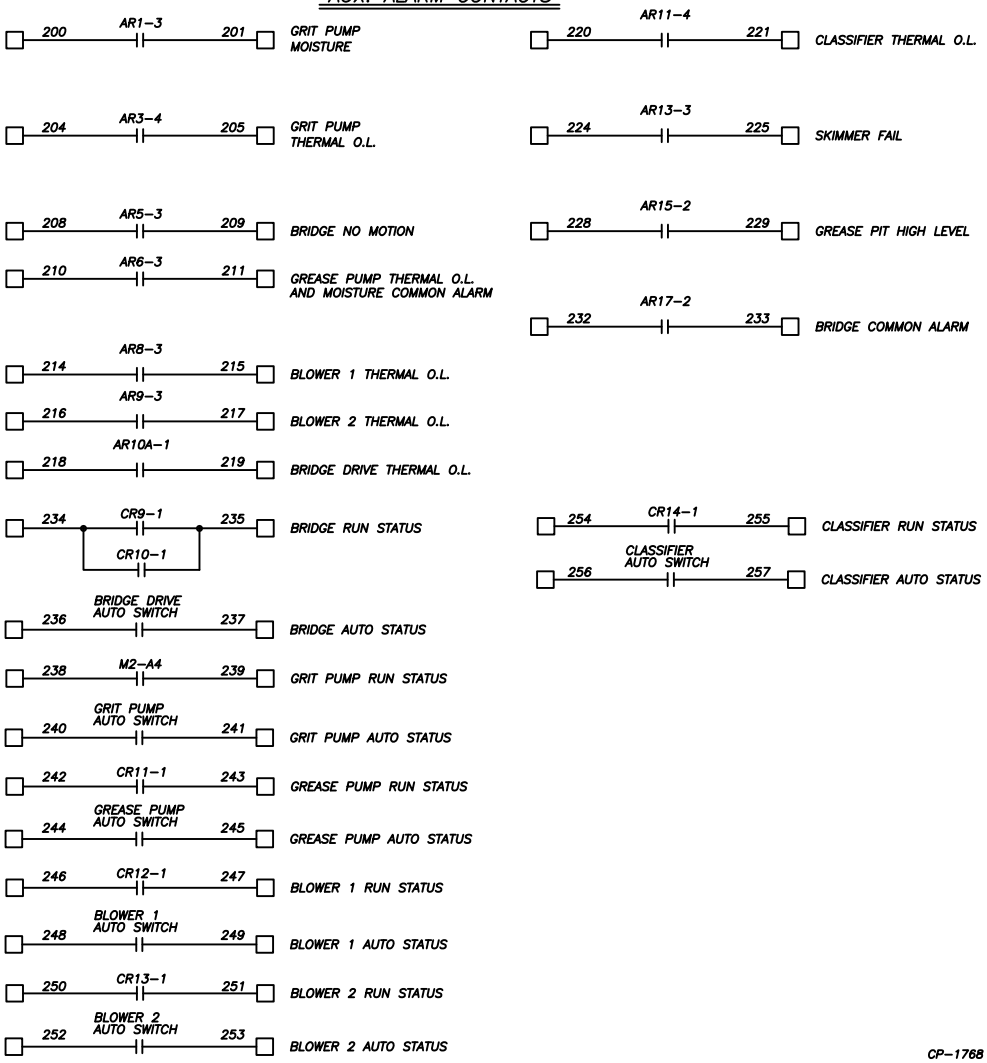

CP-1768

REV. NO.	DESCRIPTION	DATE	DRN	CHK
0	AS BUILT	05/01/01	GLL	

G-H Systems
SYSTEMS FOR WATER AND WASTEWATER TREATMENT
10805 METRIC BLVD. - AUSTIN, TEXAS - 78758
TELEPHONE: (512) 836-3883 - FAX: (512) 836-4441

THIS DRAWING AND ALL INFORMATION CONTAINED THEREIN IS THE PROPERTY OF G-H SYSTEMS, INC. REPRODUCTION OR DISCLOSURE OF THE DESIGN OR THE USE OF THE EQUIPMENT MANUFACTURE ONLY WITH THE EXPRESS-ED WRITTEN PERMISSION OF G-H SYSTEMS, INC.

REPUBLIC, MO
WASTEWATERWATER TREATMENT PLANT
GRIT & GREASE COLLECTOR CONTROL PANEL
ELECTRICAL WIRING DIAGRAM

DRAWN BY: RM DATE: 06/30/00
APPV'D. BY: GU DATE: 09/15/00
SCALE: NTS JOB NO: 00-665
FILE: 00665-07 DWG. NO: 07-01-1
SHT 6 OF 9
REV. 0

B

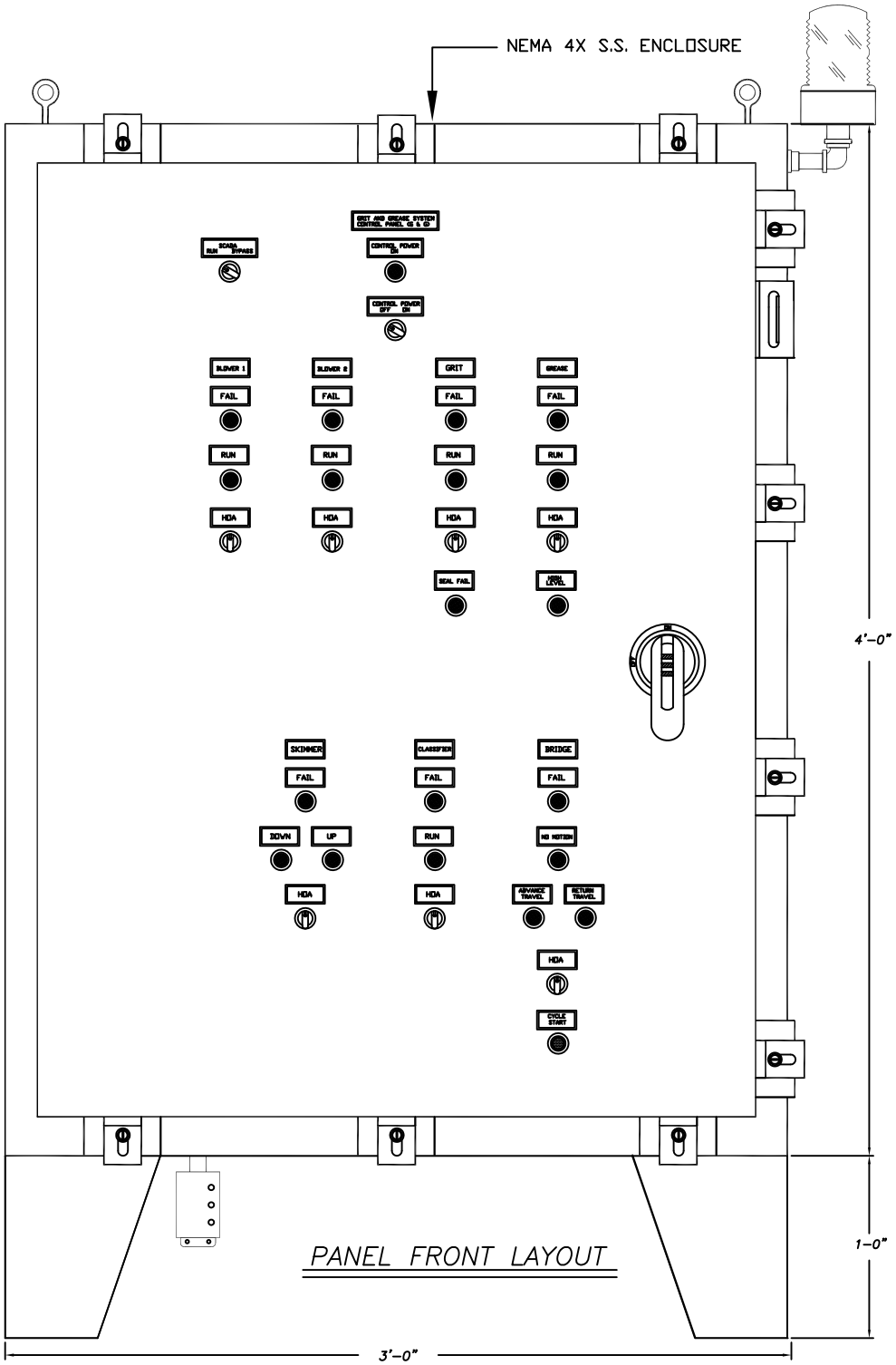

PANEL FRONT LAYOUT

CP-1768

REV. NO.	DESCRIPTION	DATE	DRN	CHK
0	AS BUILT	05/01/01	GU	

G-H Systems
SYSTEMS FOR WATER AND WASTEWATER TREATMENT

10805 METRIC BLVD. - AUSTIN, TEXAS - 78758
TELEPHONE: (512) 836-3883 - FAX: (512) 836-4441

THIS DRAWING AND ALL INFORMATION CONTAINED THEREIN IS THE PROPERTY OF G-H SYSTEMS, INC. REPRODUCTION OR DISCLOSURE OF THE DESIGN OR THE PURCHASE OF ONLY WITH THE EXPRESS-ED APPROVAL OF THE EQUIPMENT MANUFACTURER.

REPUBLIC, MO
WASTEWATERWATER TREATMENT PLANT
GRIT & GREASE COLLECTOR CONTROL PANEL
ELECTRICAL WIRING DIAGRAM

DRAWN BY: RM DATE: 06/30/00 SHT 7 OF 9
APPV'D. BY: GU DATE: 09/15/00
SCALE: NTS JOB NO: 00-665
FILE: 00665-07 DWG. NO: 07-01-1

B REV. 0

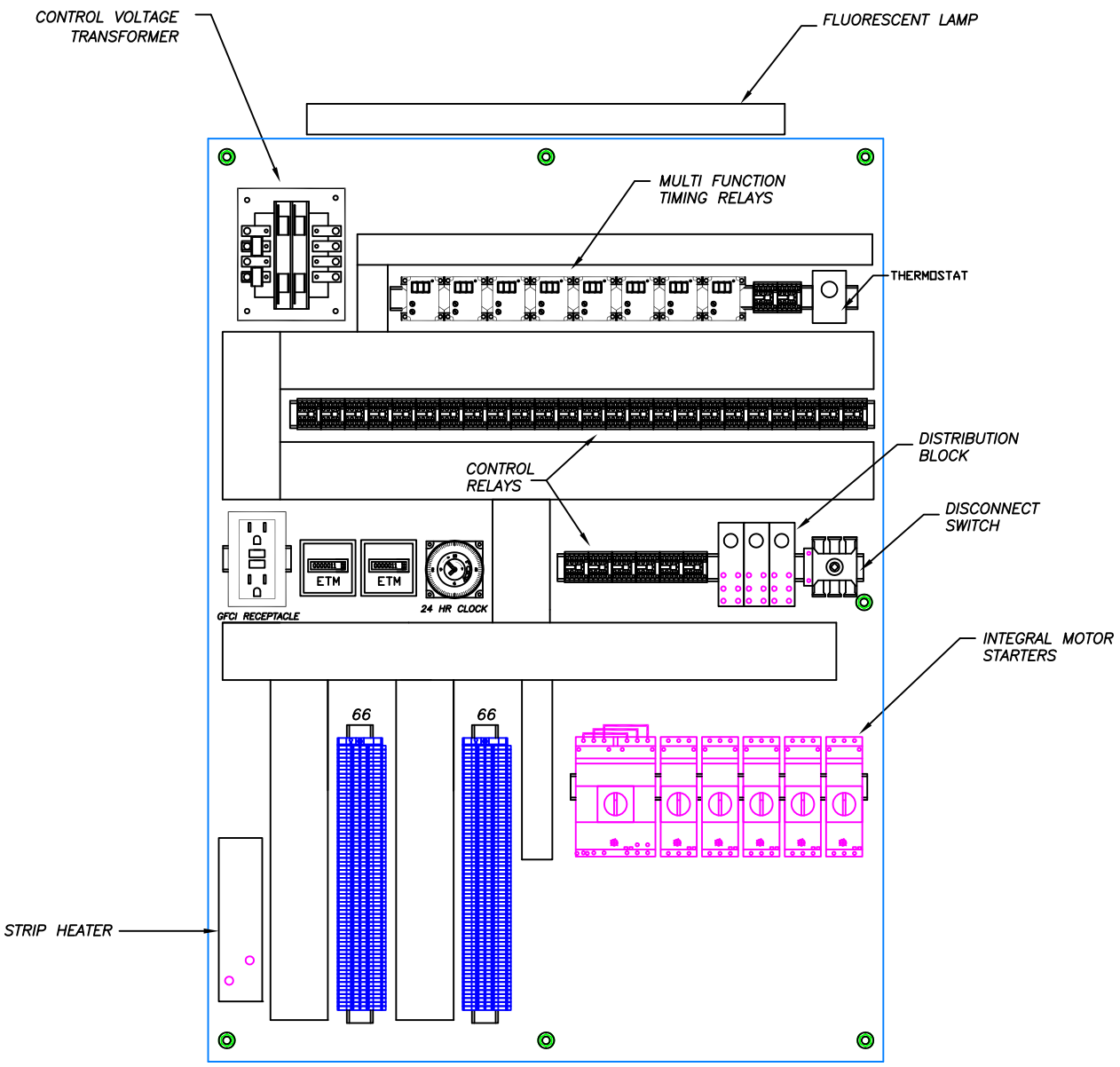

BACK PANEL LAYOUT

FINAL PANEL LAYOUT MAY DIFFER FROM SUBMITTAL DRAWINGS

CP-1768

REV. NO.	DESCRIPTION	DATE	DRN	CHK
0	AS BUILT	05/01/01	GU	

G-H Systems
SYSTEMS FOR WATER AND WASTEWATER TREATMENT

10805 METRIC BLVD. - AUSTIN, TEXAS - 78758
TELEPHONE: (512) 836-3883 - FAX: (512) 836-4441

THIS DRAWING AND ALL INFORMATION CONTAINED THEREIN IS THE PROPERTY OF G-H SYSTEMS, INC. REPRODUCTION OR DISCLOSURE OF THE DESIGN OR THE PURCHASE OF ONLY WITH THE EXPRESS-ED WRITTEN PERMISSION OF THE EQUIPMENT MANUFACTURER.

REPUBLIC, MO
WASTEWATERWATER TREATMENT PLANT
GRIT & GREASE COLLECTOR CONTROL PANEL
ELECTRICAL WIRING DIAGRAM

DRAWN BY: RM DATE: 06/30/00
APPV'D. BY: GU DATE: 09/15/00 SHT 8 OF 9
SCALE: NTS JOB NO: 00-665
FILE: 00665-07 DWG. NO: 07-01-1 REV. 0

B

BILL OF MATERIALS

ITEM	QTY	MANUFACTURER	PART NO.	DESCRIPTION
1	1	EBE	S48368N4X/W12"LEGS & LUGS	ENCLOSURE NEMA 4X SS
1a	1	EBE	A4836P	BACKPLATE
2	1	ABB	OT63E3	DISCONNECT SWITCH
3	1	ABB	OHB65L5	HANDLE
4	1	ABB	OXP5X265	SHAFT
5	5	TELEMECHANIQUE	LD1LB030FC	INTEGRAL MOTOR STARTER 2,4,6–8
6	1	TELEMECHANIQUE	LD5LB130PFC	INTEGRAL MOTOR STARTER 1
7	1	TELEMECHANIQUE	LB1LB03P06	O.L. 1 (1–1.6A)
8	2	TELEMECHANIQUE	LB1LB03P07	O.L. 4,8 (1.6A–2.5A)
9	1	TELEMECHANIQUE	LB1LB03P08	O.L. 2 (2.5–4A)
10	2	TELEMECHANIQUE	LB1LB03P13	O.L. 6,7 (6–10A)
11	1	SQUARE D	9070TF1000D1	TRANSFORMER 1KVA
12	3	AB	800H–HR2A	2 POSITION SWITCH
13	11	AB	800H–QR10A	AMBER PILOT LIGHT
14	6	AB	800H–QR10G	GREEN PILOT LIGHT
15	2	AB	800H–QR10B	BLUE PILOT LIGHT
16	7	AB	800H–JR2A	3 POSITION SWITCH
17	1	INTERMATIC	IG4803LDH	TVSS SURGE SURPRESSOR
18	2	HOFFMAN	A–TEMNC	THERMOSTAT
19	2	WATLOW	375	STRIP HEATER
20	23	OMRON	MY41NAC120	CONTROL RELAYS
21	1	GRASSLIN	FM/1 STUZHL	24 HR TIMER
22	10	DAYTON	6A855	MULTIFUNCTION TIMER
23	2	REDDINGTON	711–0187	ETM
24	2	REDDINGTON	712–0005	ETM DIN MOUNT
25	2	AB	800H–AR1A	PUSH BUTTON
26	1	TOMAR	495–1280–R	RED STROBE LIGHT
27	1	MARATHON	1323580	DISTRIBUTION BLOCK
28	1	ABB	OA2G11	DISCONNECT AUX. CONTACT
29	1	STOCK		INTERNAL LIGHT
30	1	STOCK		GFI RECEPTACLE
31	1	EBE	S20168N4X	ENCLOSURE NEMA 4X SS
32	1	EBE	A2016P	BACKPLATE
33	6	OMRON	MY2INAC120	CR9–14
34	9	A–B	800T–XA	AUX. CONTACT BLOCKS

REV. NO.	DESCRIPTION	DATE	DRN	CHK
0	AS BUILT	05/01/01	GU	

G-H Systems
SYSTEMS FOR WATER AND WASTEWATER TREATMENT

10805 METRIC BLVD. – AUSTIN, TEXAS – 78758
TELEPHONE: (512) 836–3883 – FAX: (512) 836–4441

THIS DRAWING AND ALL INFORMATION CONTAINED THEREON IS THE PROPERTY OF G-H SYSTEMS, INC. REPRODUCTION OF THE DESIGN OR THE PURCHASE OF ONLY WITH THE EXPRESS-ED WRITTEN CONSENT OF THE EQUIPMENT MANUFACTURER.

REPUBLIC, MO
WASTEWATERWATER TREATMENT PLANT
GRIT & GREASE COLLECTOR CONTROL PANEL
ELECTRICAL WIRING DIAGRAM

DRAWN BY: RM DATE: 06/30/00 SHT 9 OF 9
APPV'D. BY: GU DATE: 09/15/00 REV.
SCALE: NTS JOB NO: 00–665 0
FILE: 00665–07 DWG. NO: 07–01–1 B

CP–1768