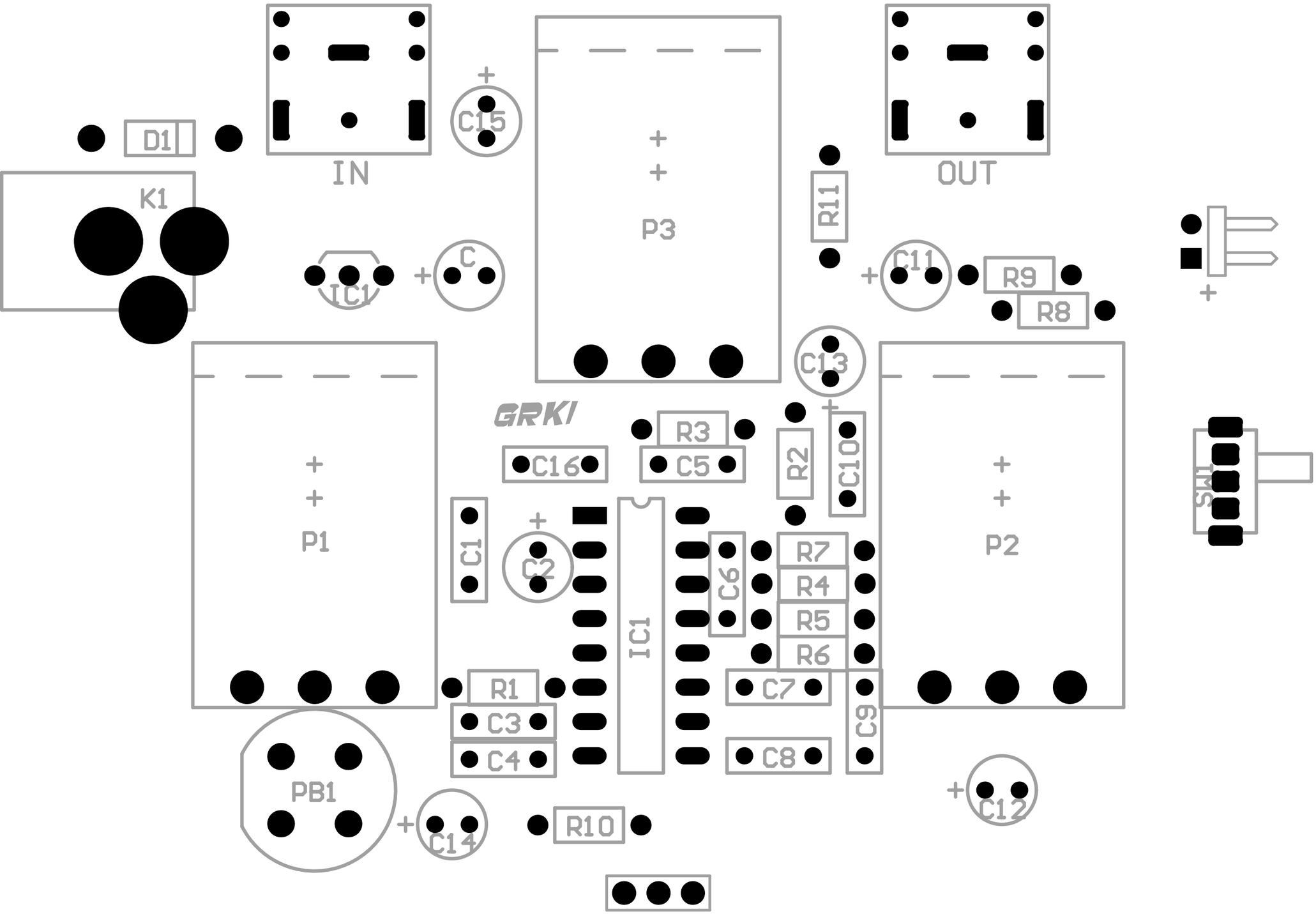
D1
K1
IN
C15
P3
OUT
R11
IC1
C
C11
R9
R8
C13
GRKI
R3
C16
C5
R2
C10
SW1
P1
P2
C1
C2
C6
R7
R4
R5
R6
IC1
R1
C3
C4
C7
C9
C8
PB1
C14
R10
C12

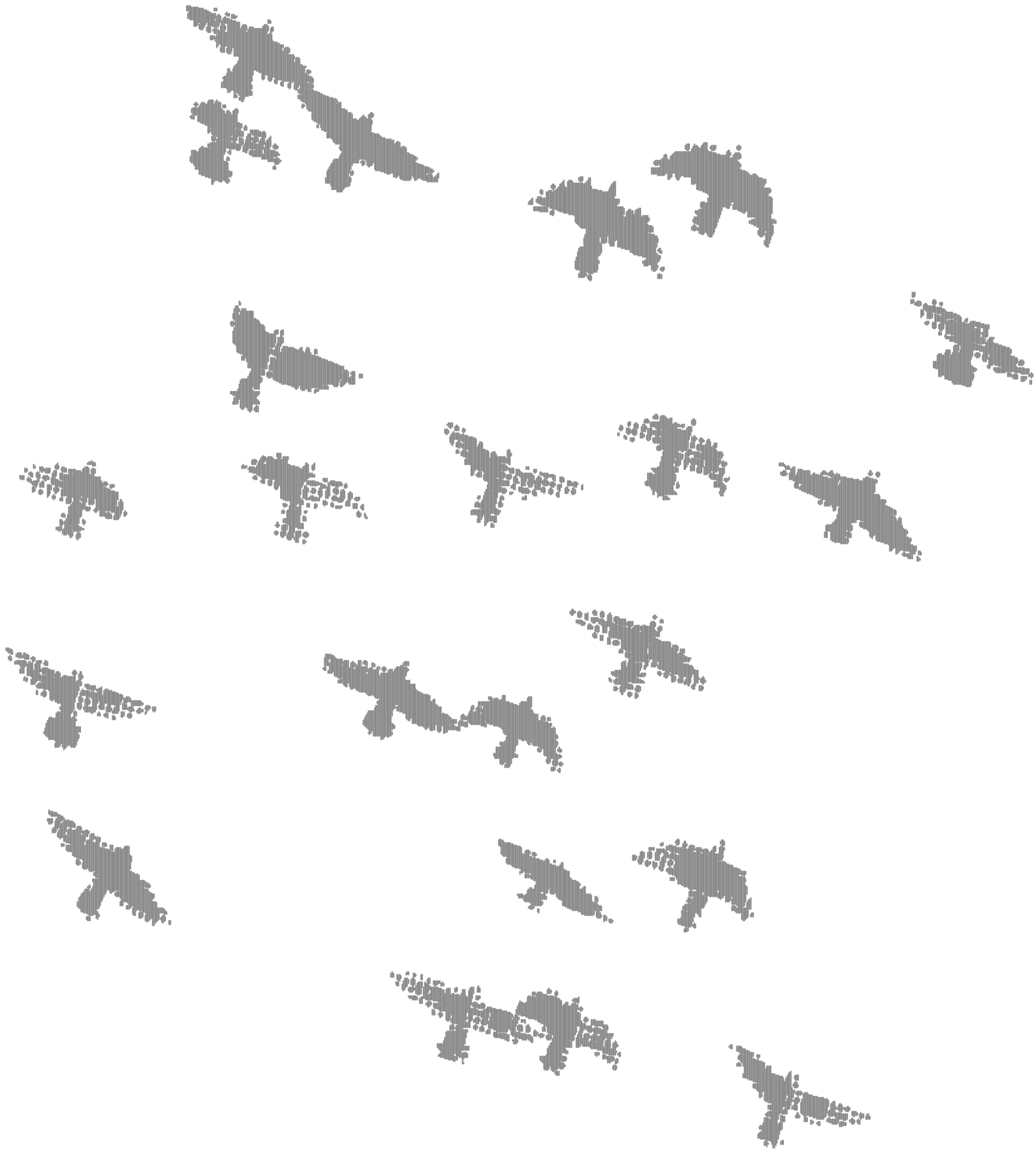

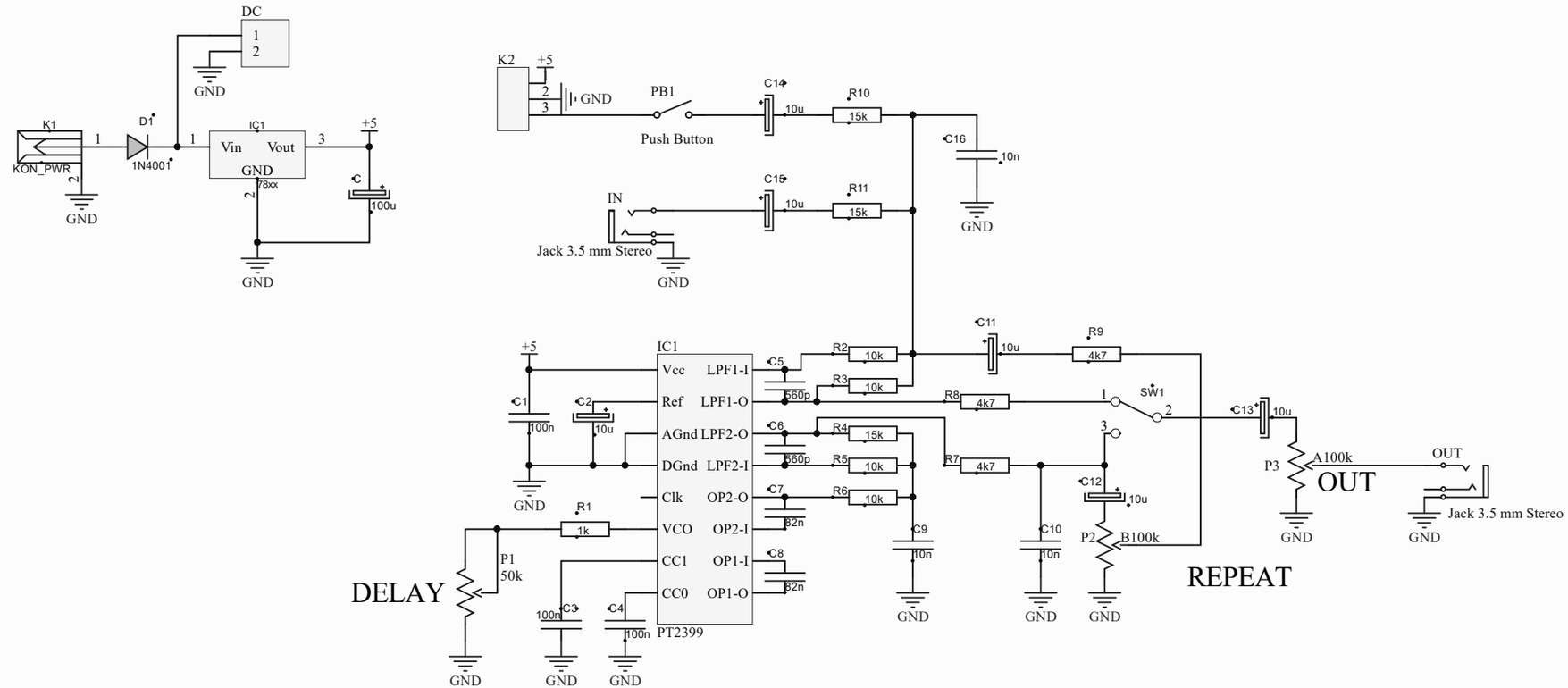

Title		
SIMPLE ECHO		
Size A4	Number	Revision
Date: 27. 06. 2023		Sheet of
File: D:\ArtLab\..\EchoFX.SchDoc		Drawn By: