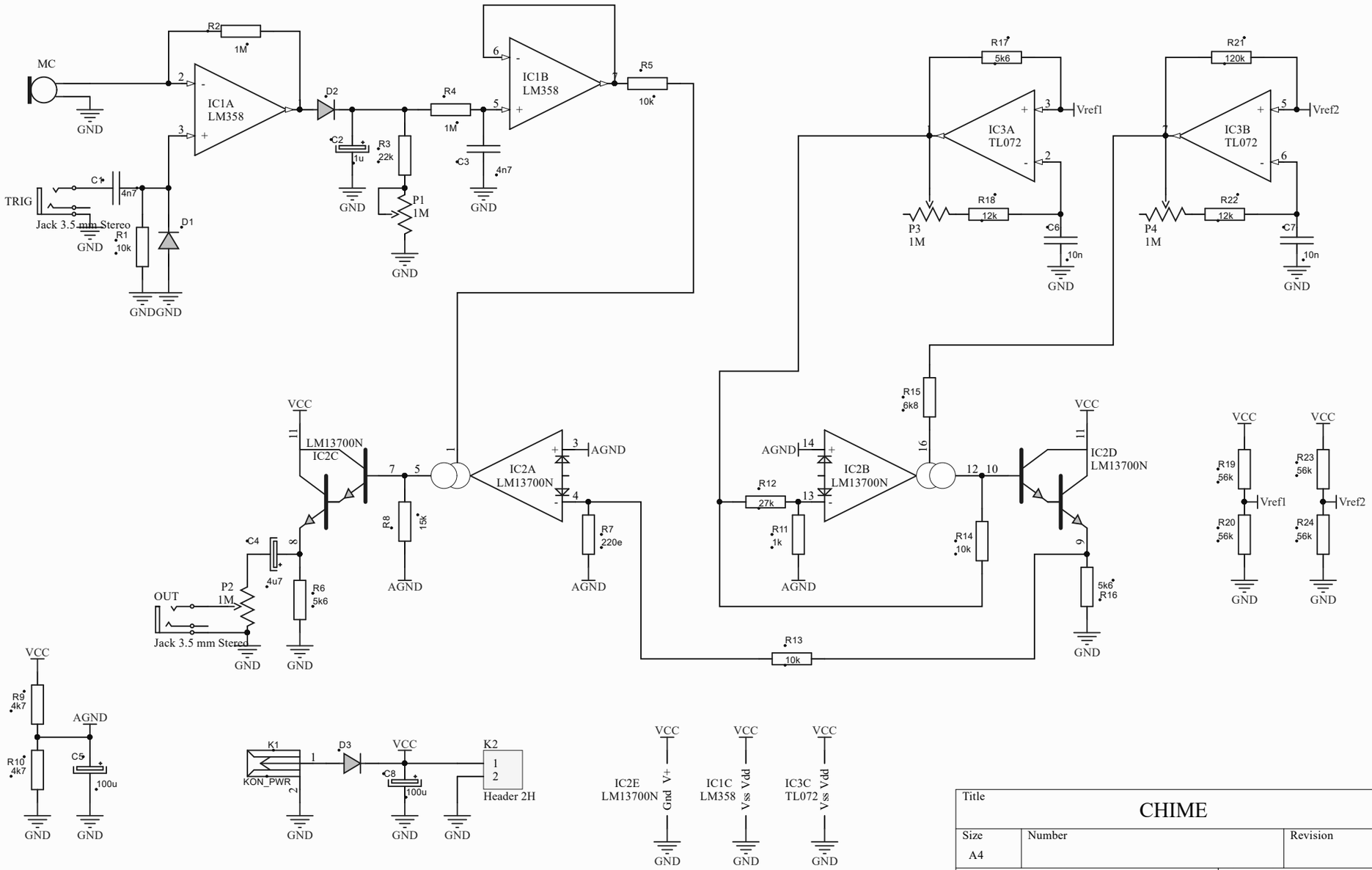

Title	CHIME	
Size A4	Number	Revision
Date: 21. 08. 2022		Sheet of
File: D:\ArtLab\..\Chime.SchDoc		Drawn By: