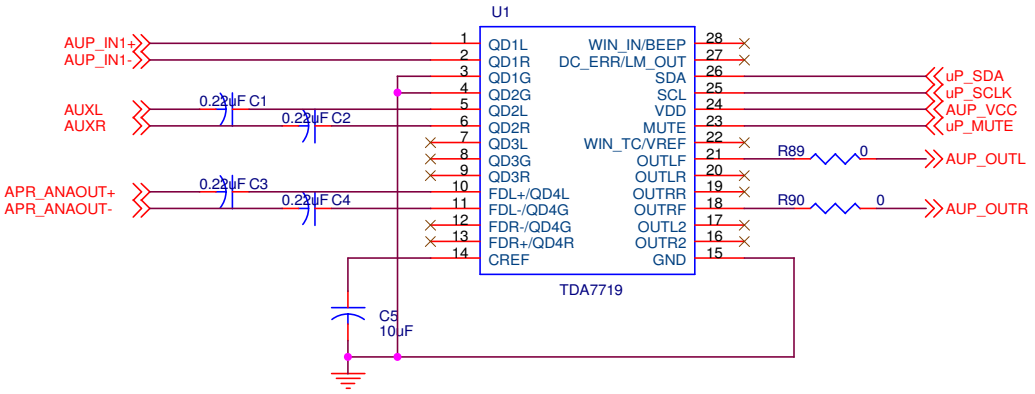

Title	DIGITAL CAR RADIO	
Size A	Document Number <Doc>	Rev <RevCode>
Date: Tuesday, August 19, 2008	Sheet 1 of 1	

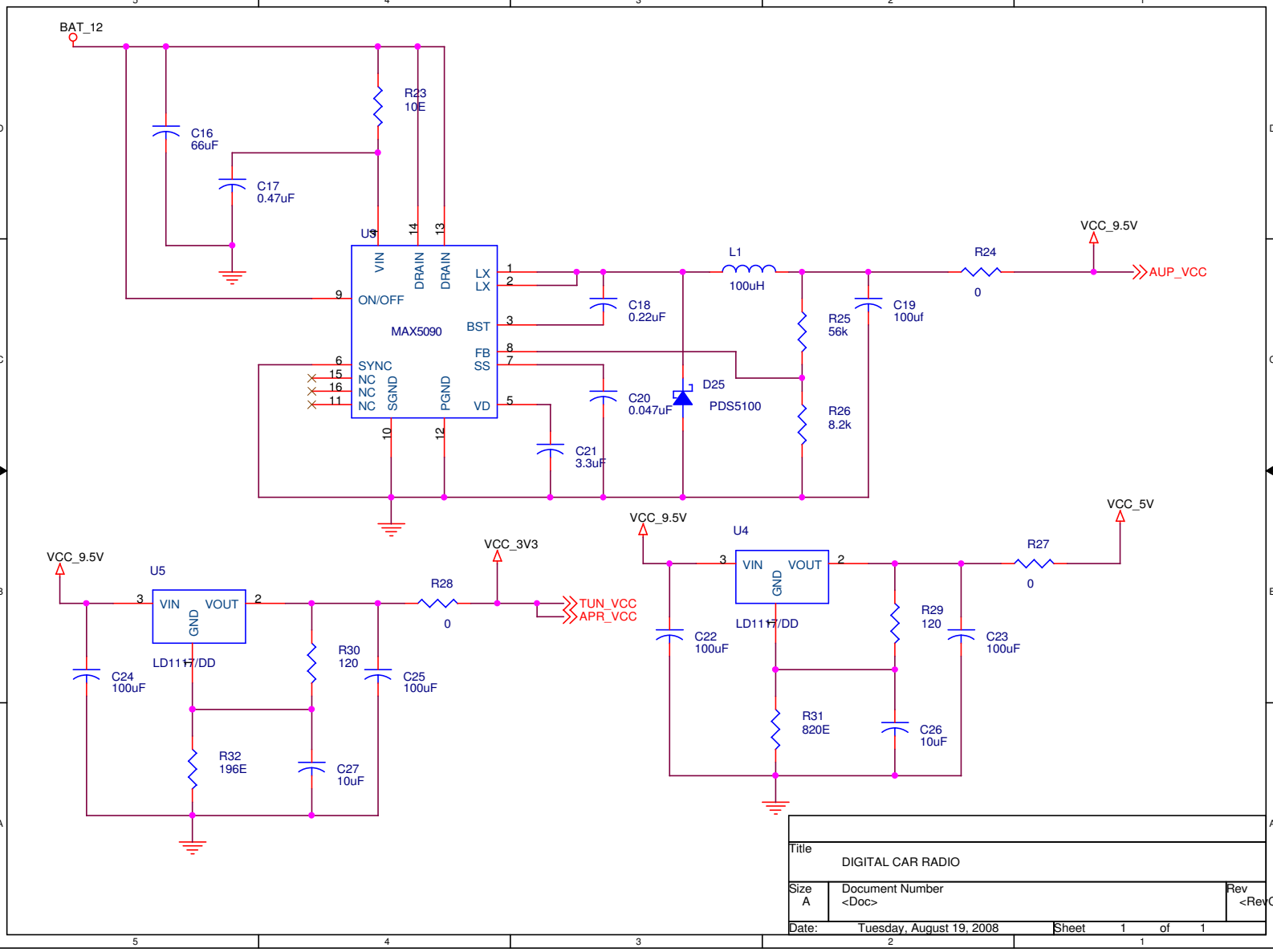

Title	DIGITAL CAR RADIO	
Size A	Document Number <Doc>	Rev <RevCode>
Date: Tuesday, August 19, 2008	Sheet 1 of 1	

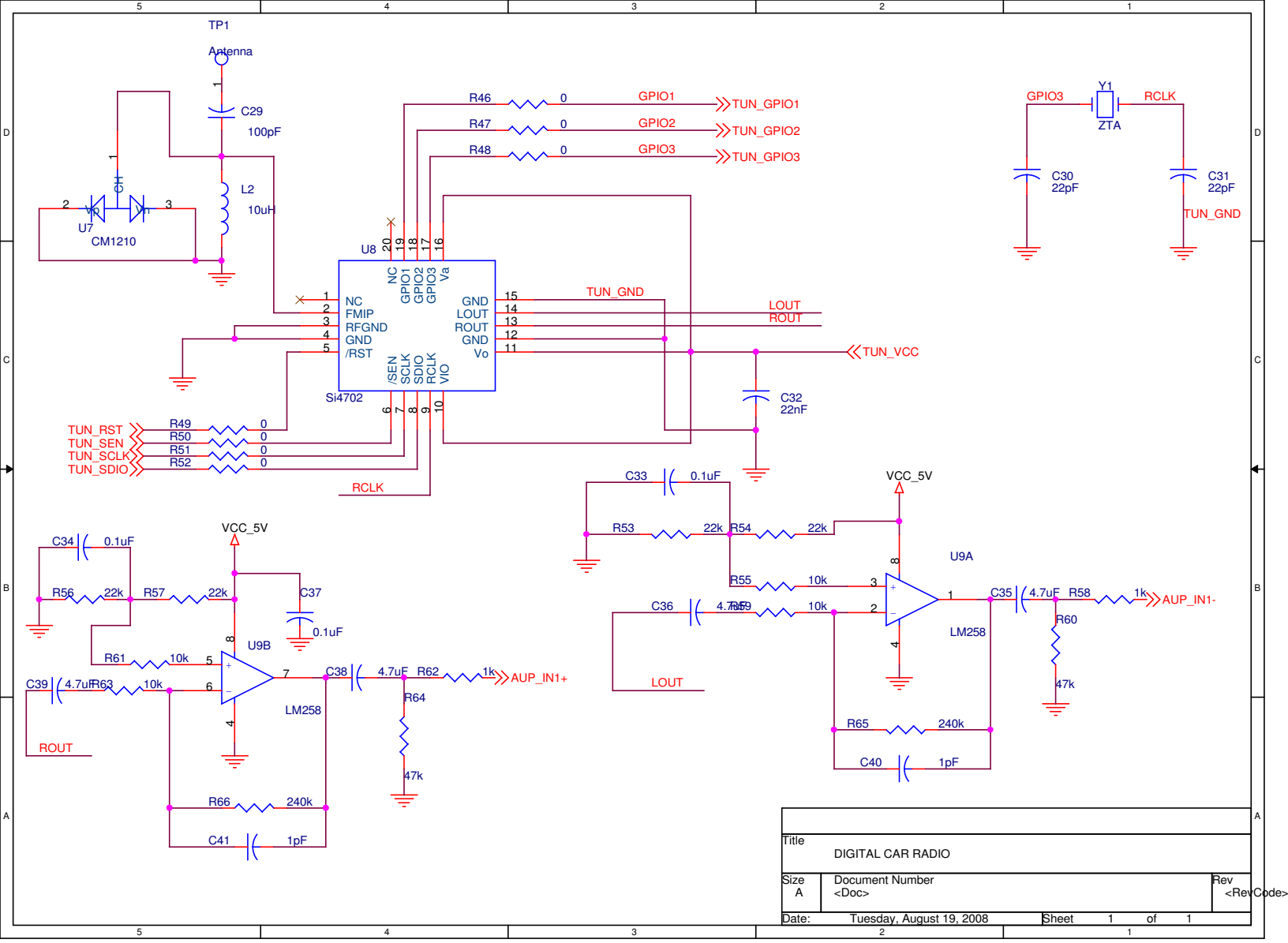

Title	DIGITAL CAR RADIO	
Size A	Document Number <Doc>	Rev <RevCode>
Date: Tuesday, August 19, 2008	Sheet 1 of 1	

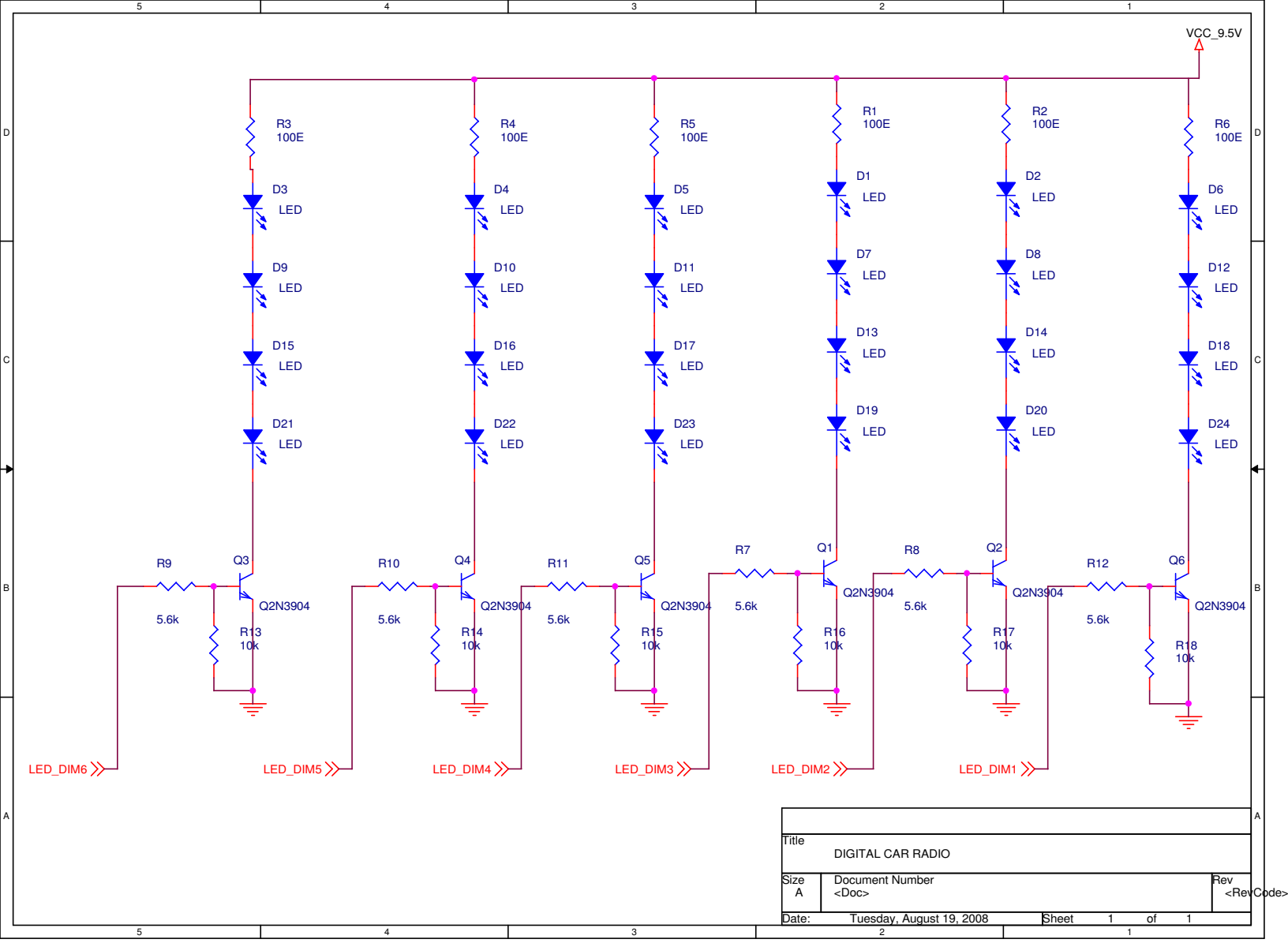

Title	DIGITAL CAR RADIO	
Size A	Document Number <Doc>	Rev <RevCode>
Date: Tuesday, August 19, 2008	Sheet 1 of 1	

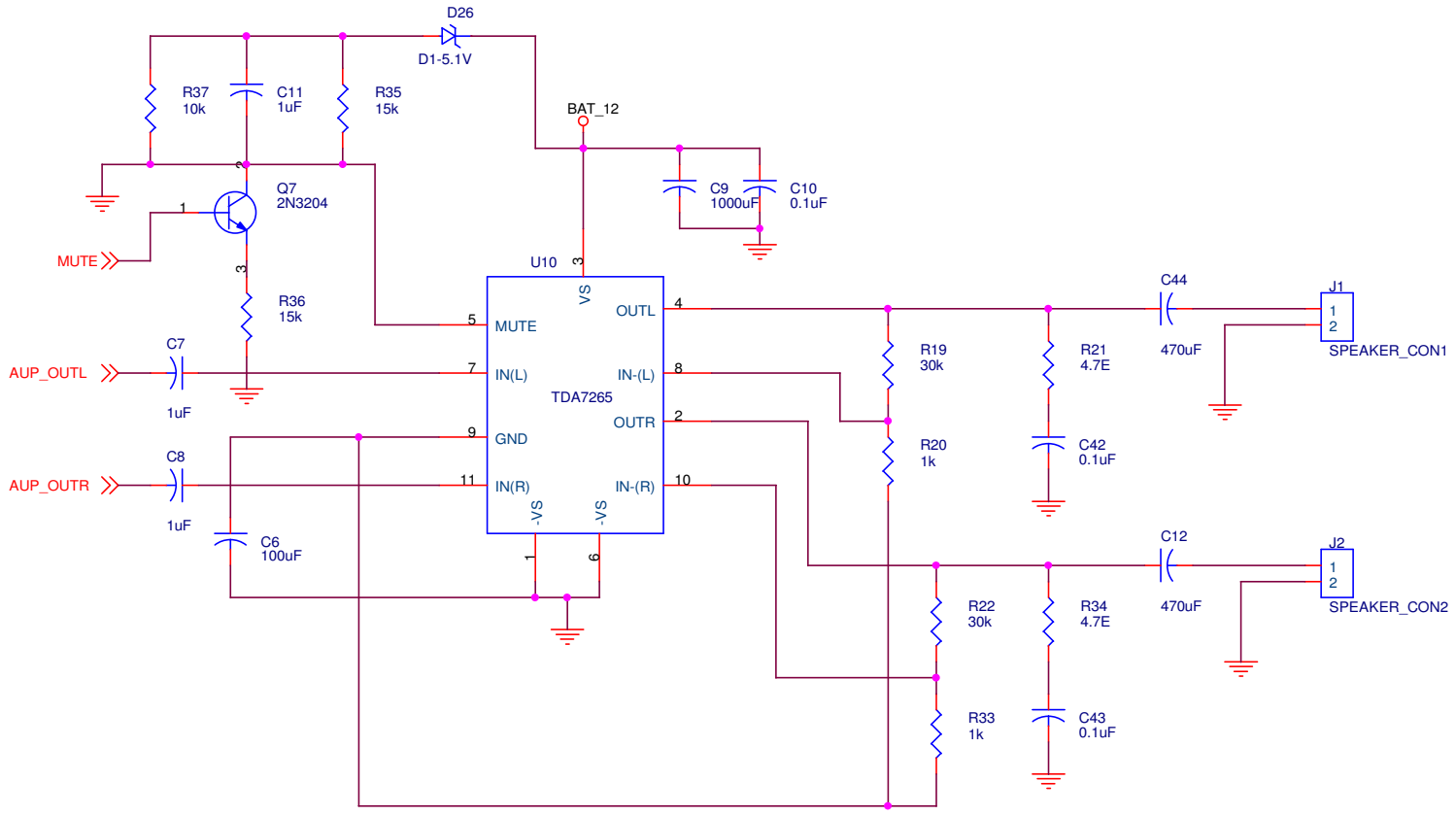

Title	DIGITAL CAR RADIO	
Size A	Document Number <Doc>	Rev <RevCode>
Date: Tuesday, August 19, 2008	Sheet 1 of 1	

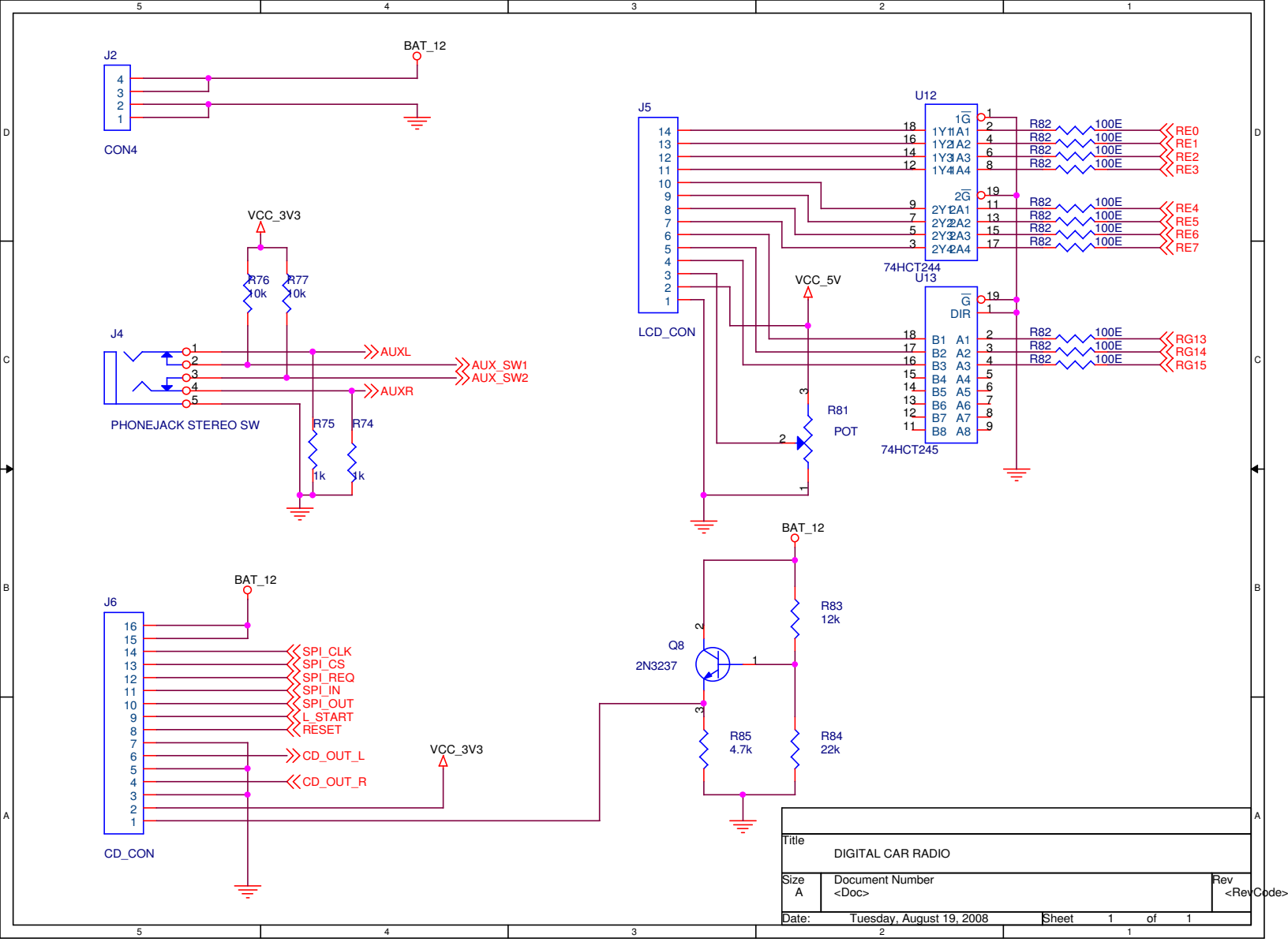

Title	DIGITAL CAR RADIO	
Size A	Document Number <Doc>	Rev <RevCode>
Date: Tuesday, August 19, 2008	Sheet 1 of 1	

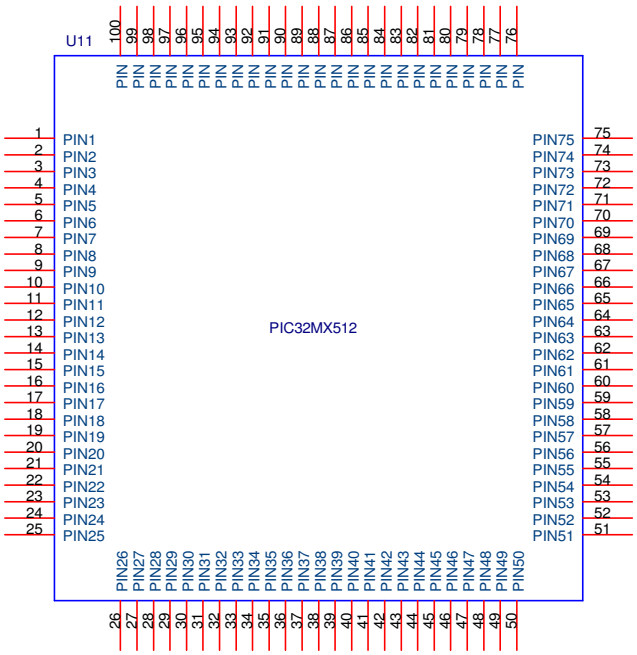

TBD

Title	DIGITAL CAR RADIO	
Size A	Document Number <Doc>	Rev <RevCode>
Date: Tuesday, August 19, 2008	Sheet 1 of 1	

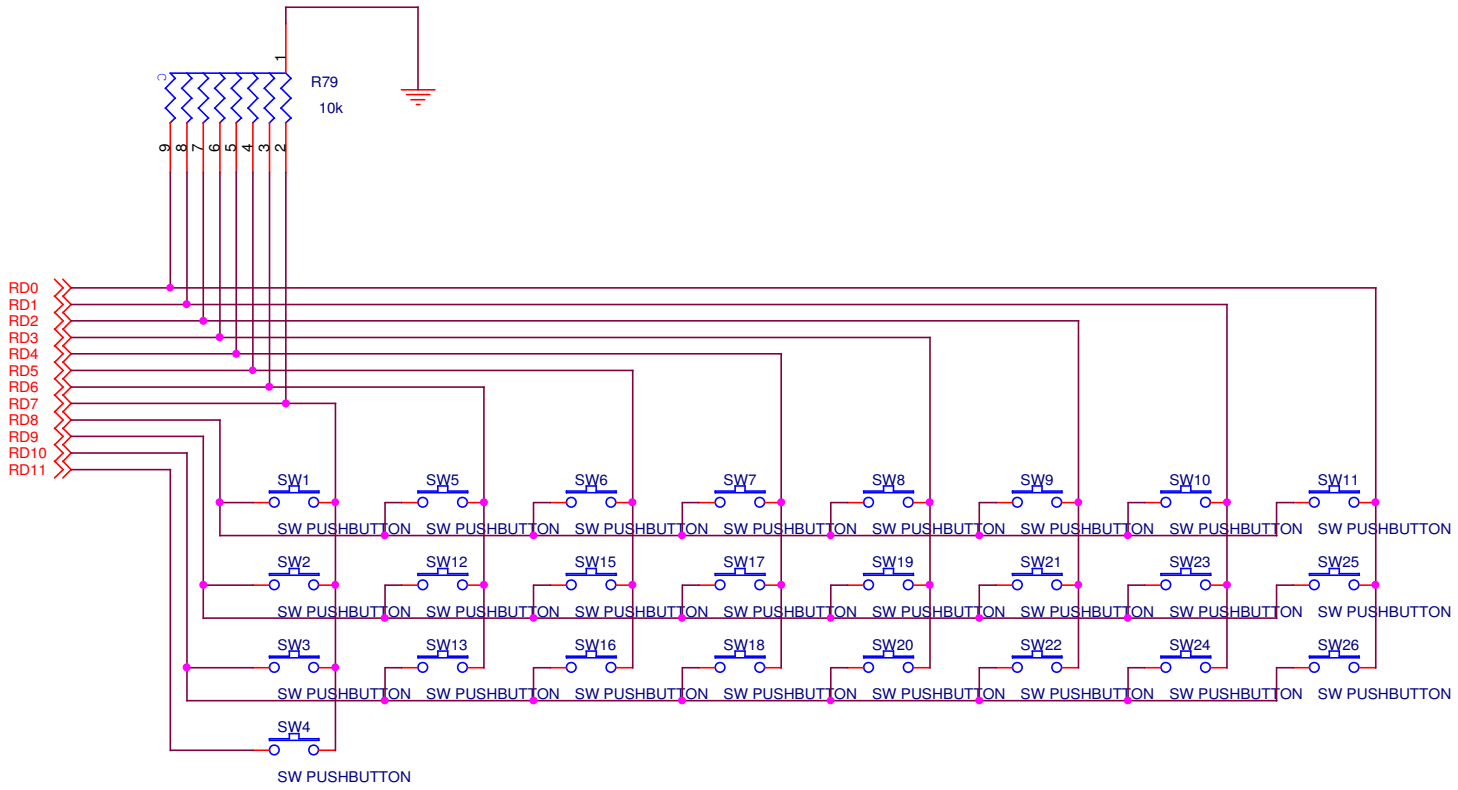

Title	DIGITAL CAR RADIO	
Size A	Document Number <Doc>	Rev <RevCode>
Date: Tuesday, August 19, 2008	Sheet 1 of 1	