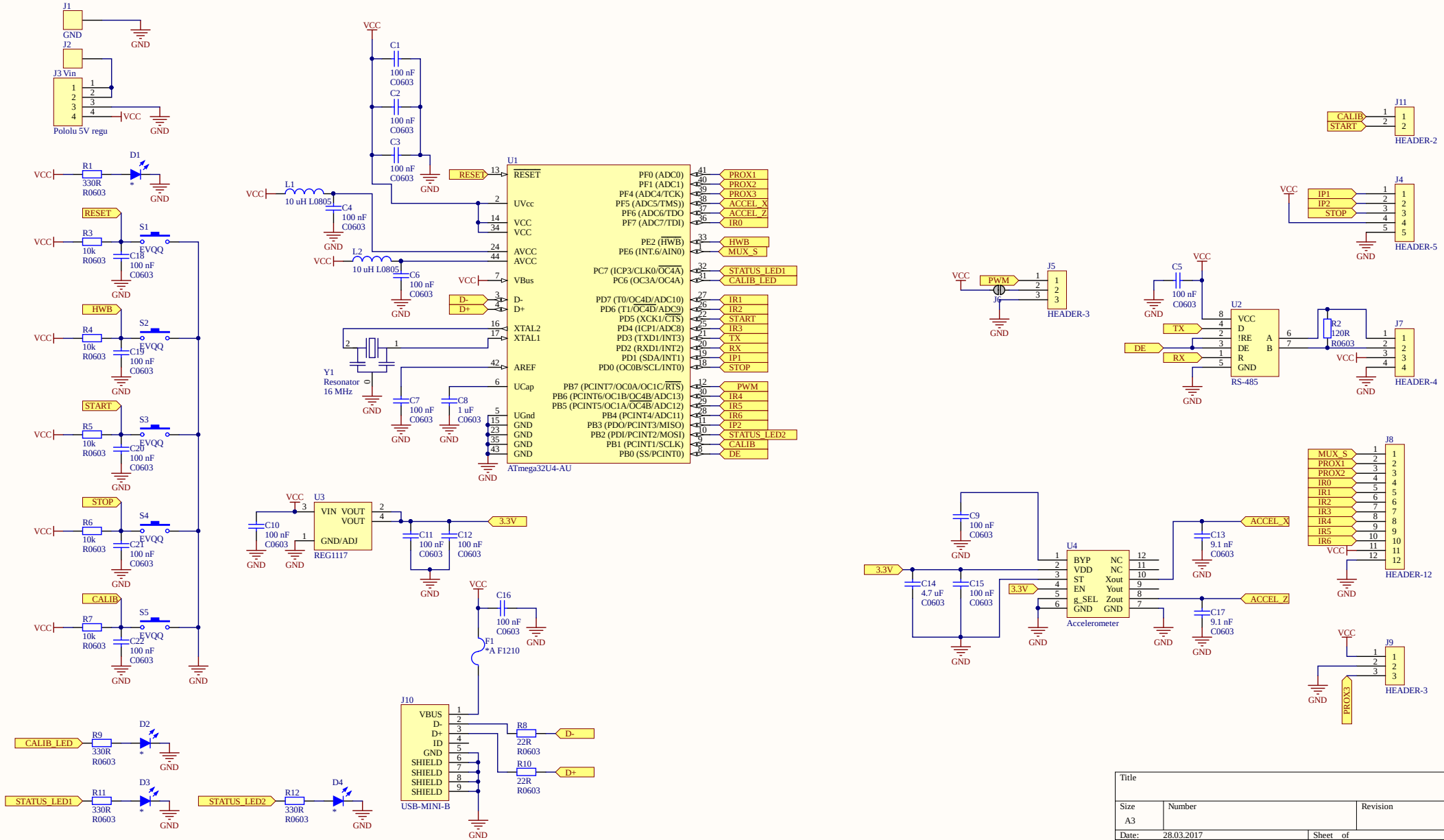

Title		
Size A3	Number	Revision
Date: 28.03.2017		Sheet of
File: C:\Users\..\Sheet1.SchDoc		Drawn By:

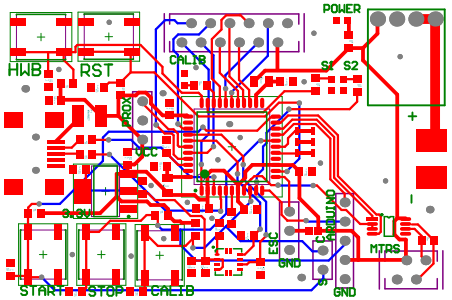

Altium
Making Electronics Design Easier

Altium Limited
12a Rodborough Rd
Frenchs Forest
NSW 2086

ENGINEER:	TITLE:	
PCB DESIGNER:		
DATE: 28.03.2017	PART NO.:	REV:
FILE NAME: main_board.PcbDoc	DWG NO:	SCALE: