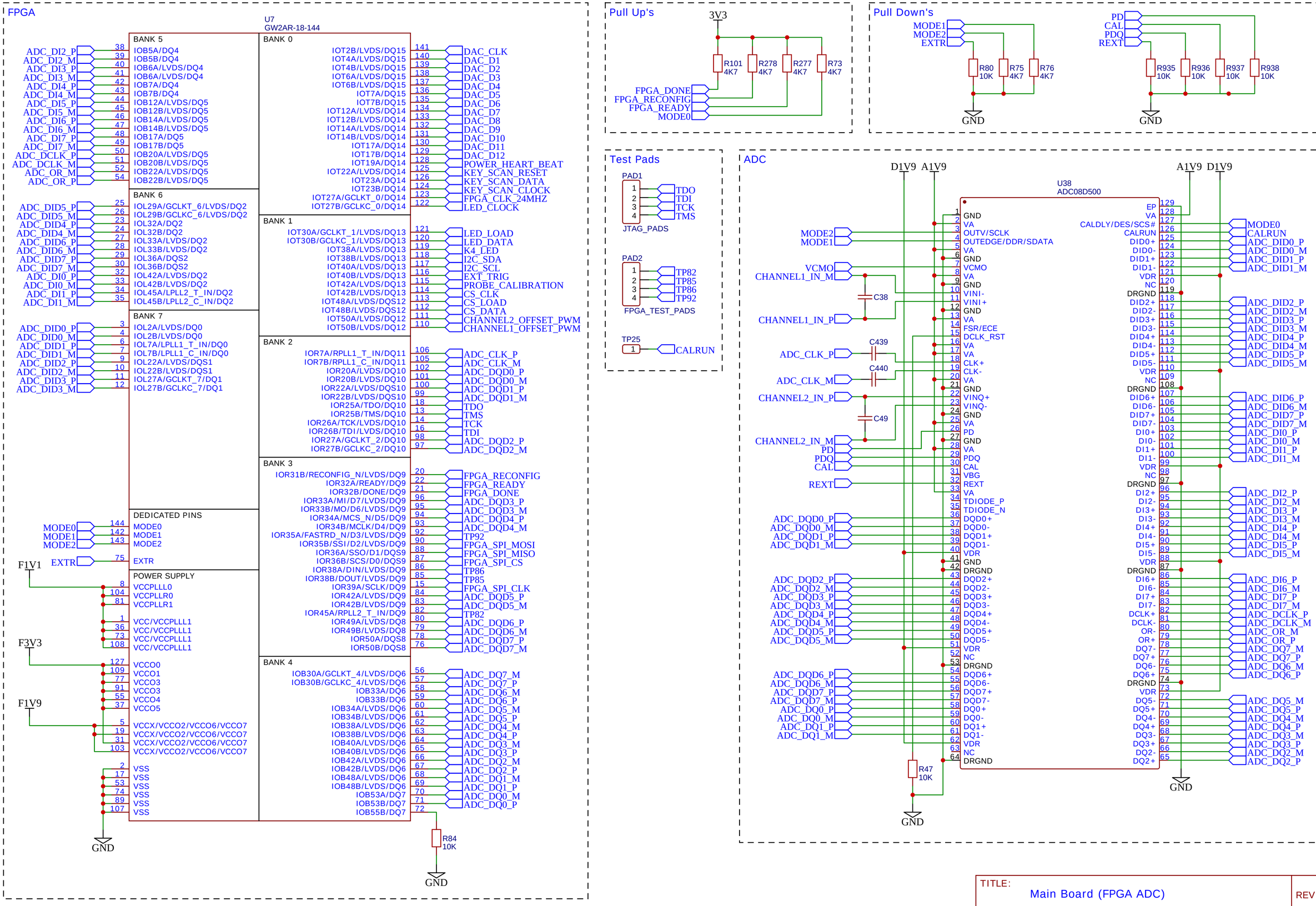

TITLE: Main Board (FPGA ADC)	REV: 1.0
Company:	Sheet: 2/8
Date: 2022-06-21 Drawn By:	

EasyEDA

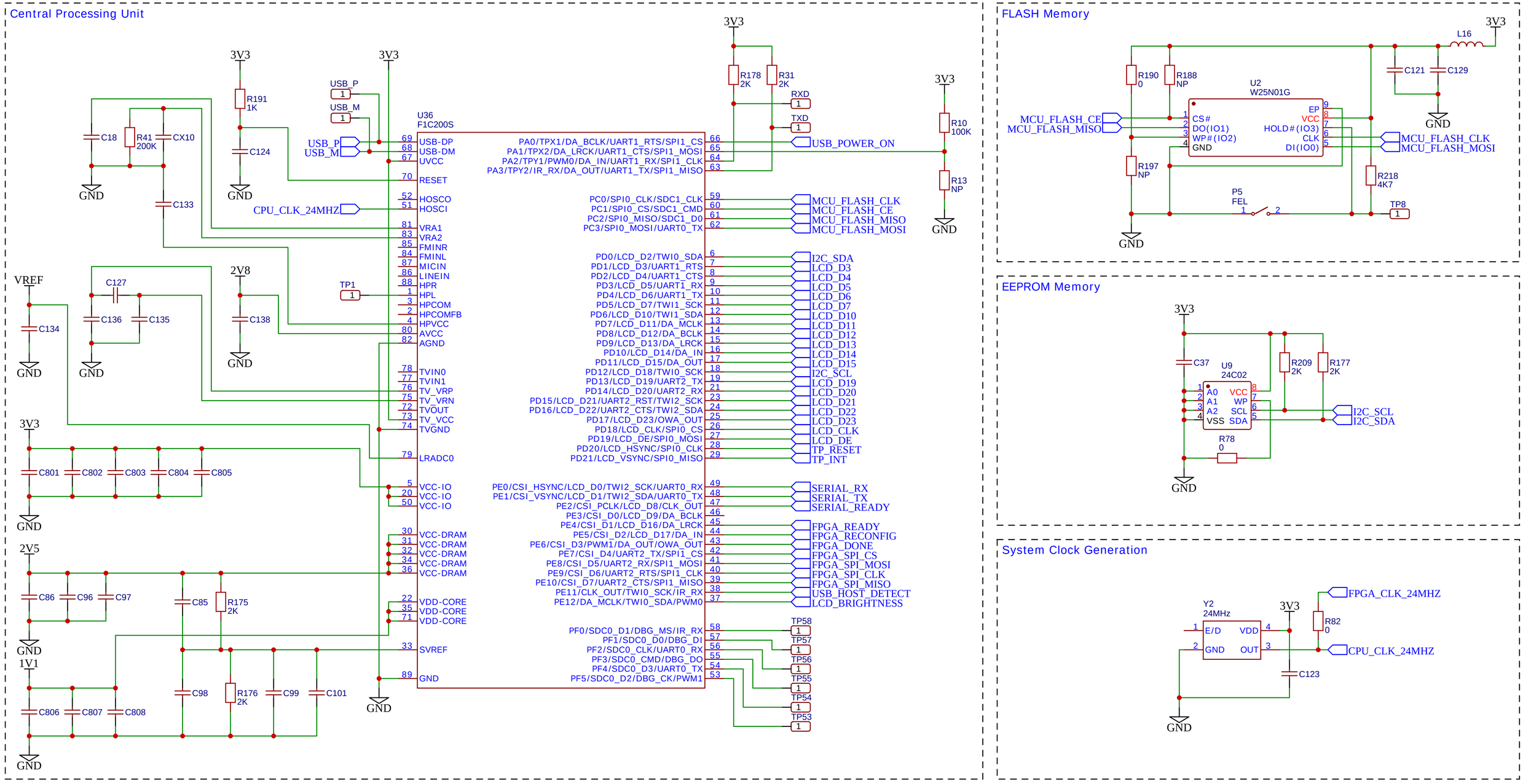

TITLE: Main Board (Processor)	REV: 1.0
Company:	Sheet: 1/8
Date: 2022-06-23 Drawn By:	

EasyEDA

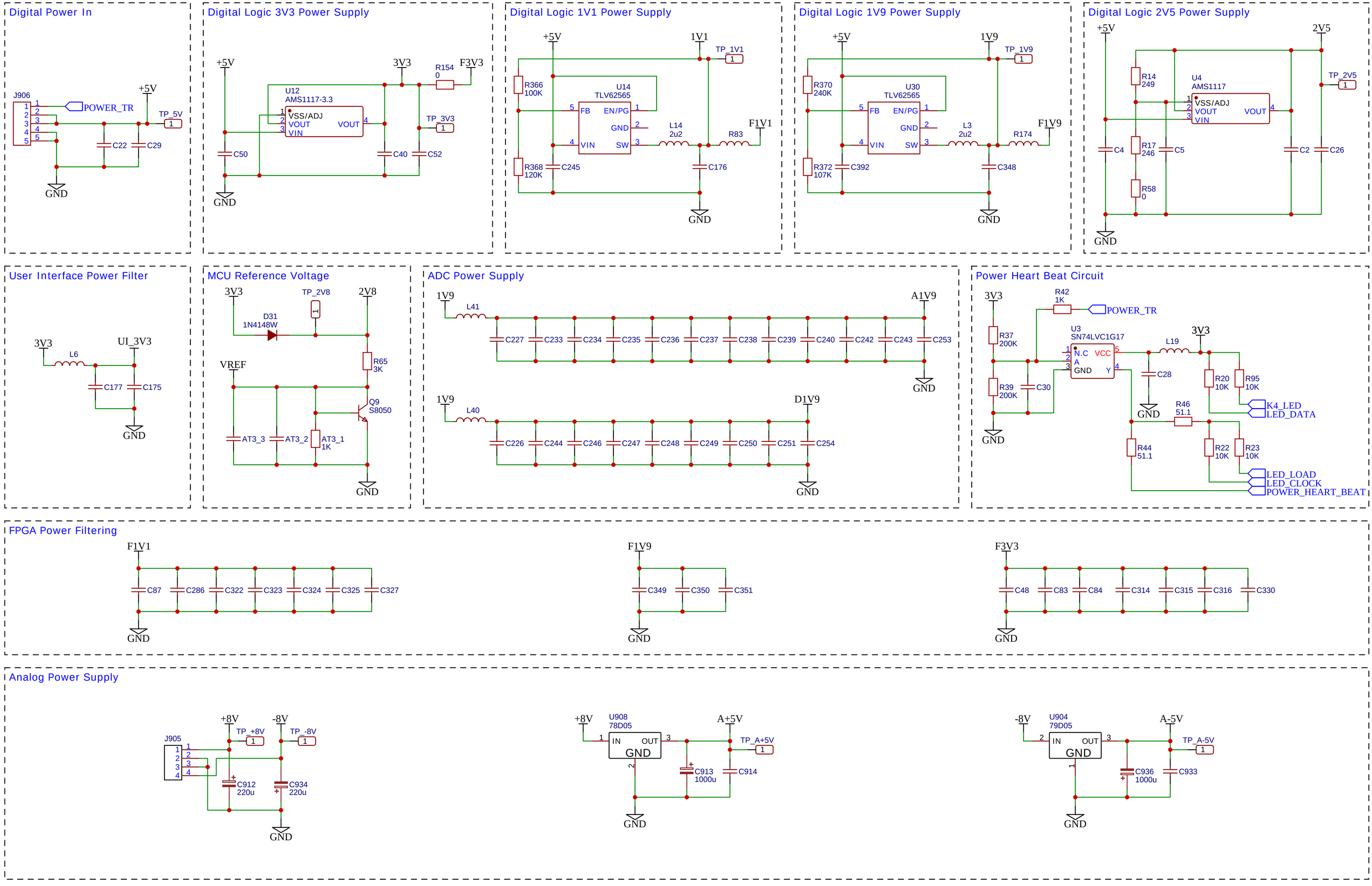

TITLE: Main Board (Power Supply)	REV: 1.0
Company:	Sheet: 8/8
Date: 2022-06-26 Drawn By:	

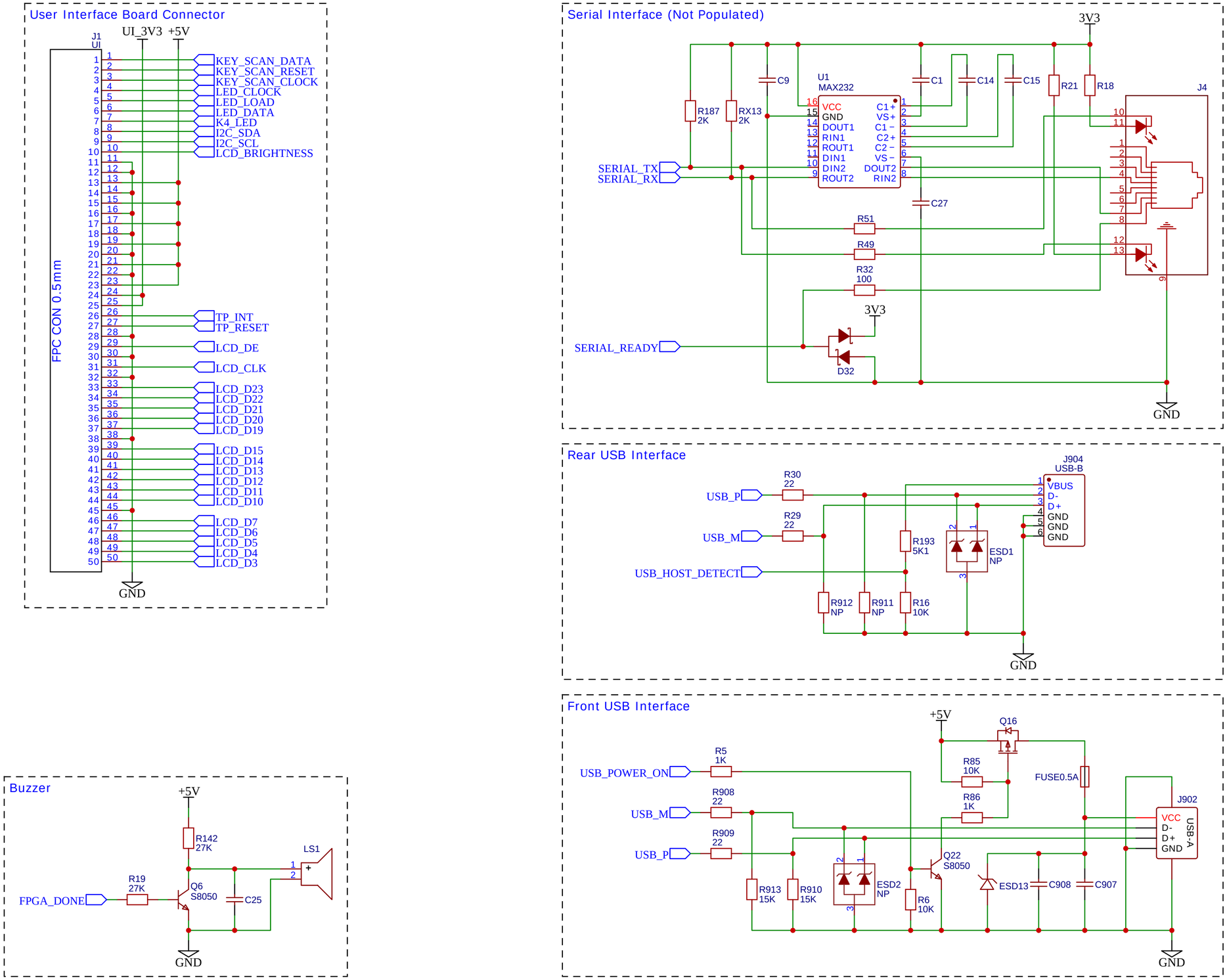

TITLE: Main Board (External Interfaces)		REV: 1.0
EasyEDA	Company:	Sheet: 7/8
	Date: 2022-06-29 Drawn By:	

Waveform Generator And Trigger Input

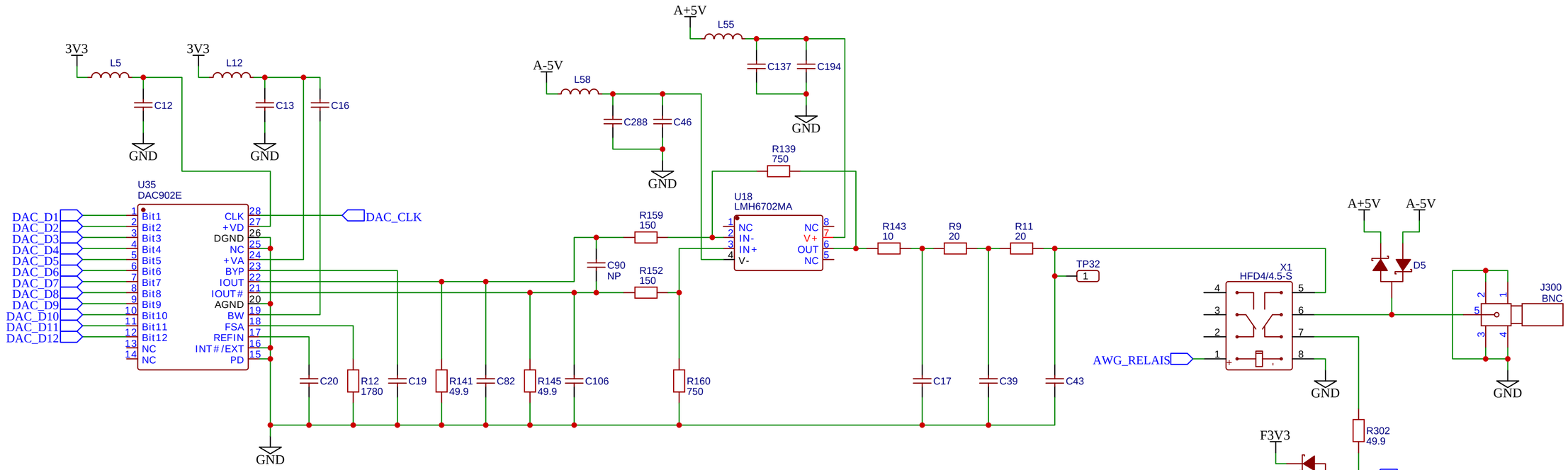

Probe Calibration Signal

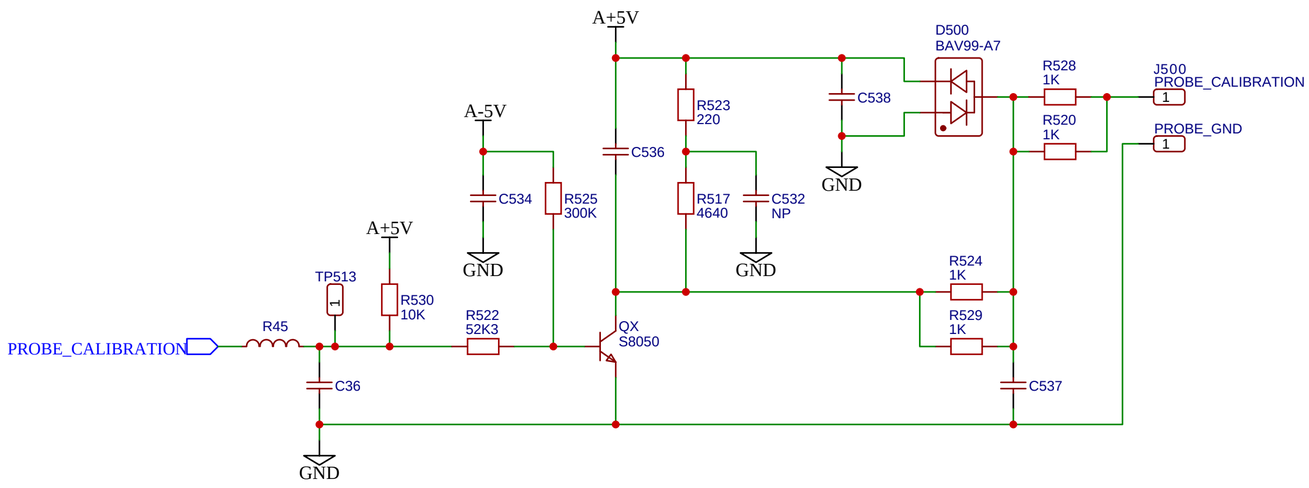

TITLE: Main Board (Wavefrom Generator)		REV: 1.0
EasyEDA	Company:	Sheet: 6/8
	Date: 2022-06-29 Drawn By:	

Offset Signal Buffers Power Supply

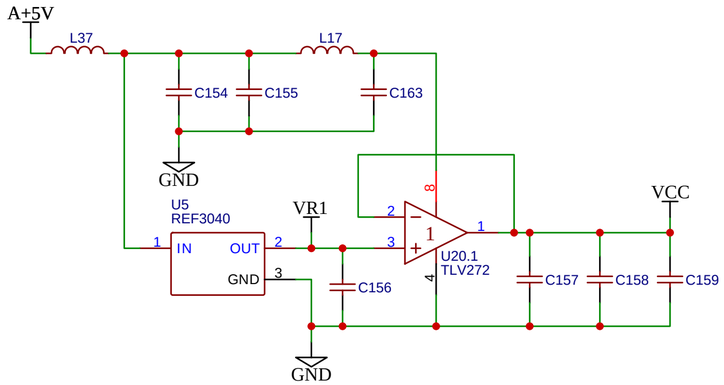

Channel Control Signals

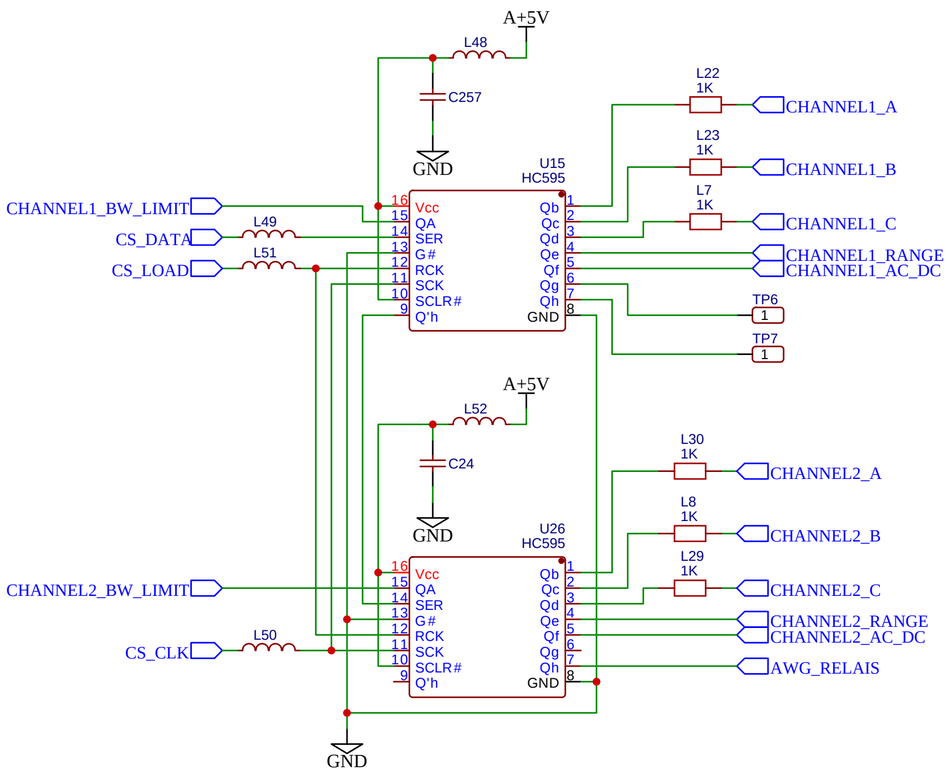

Offset Signals

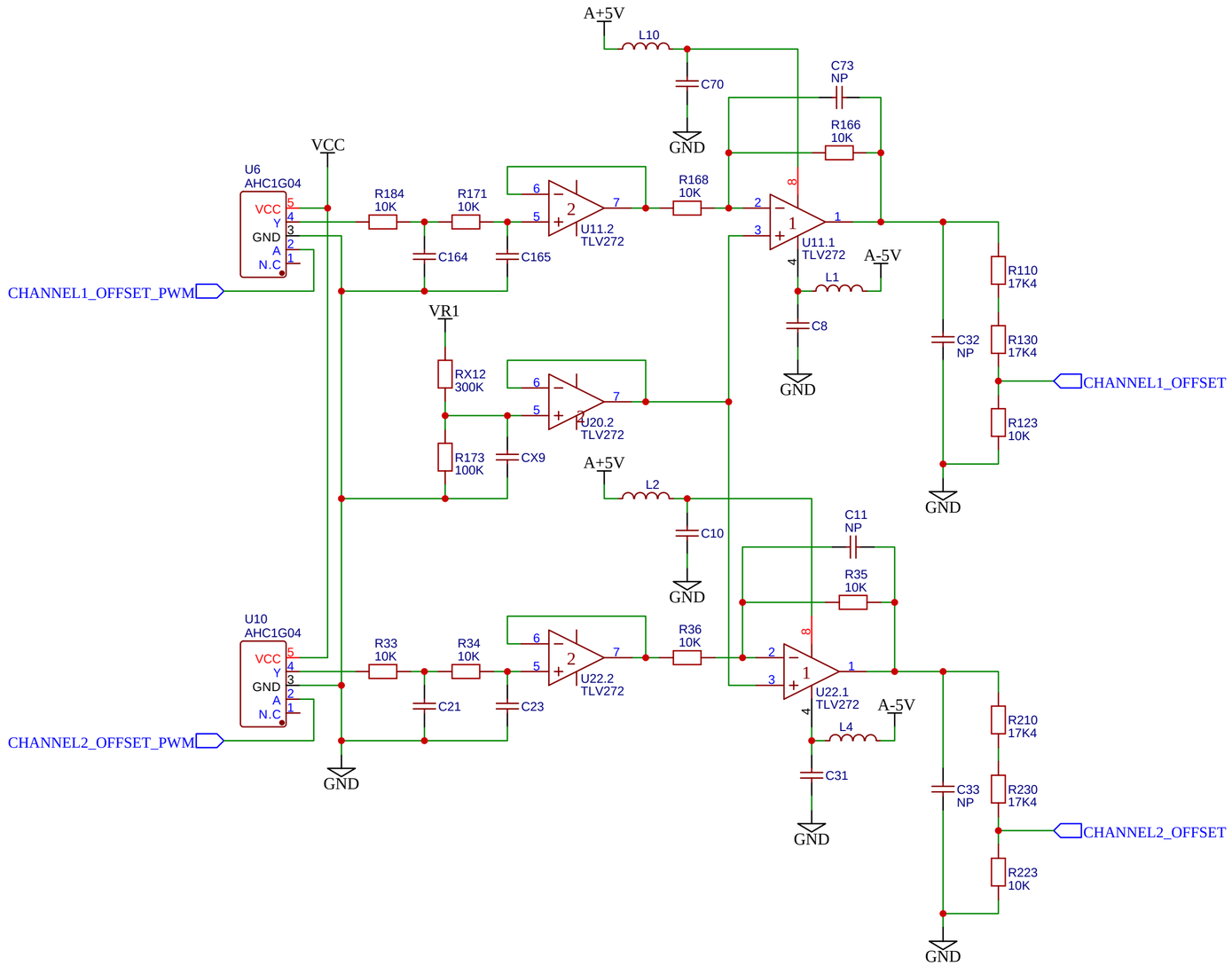

TITLE: Main Board (Control Signals)		REV: 1.0
EasyEDA	Company:	Sheet: 3/8
	Date: 2022-06-29 Drawn By:	

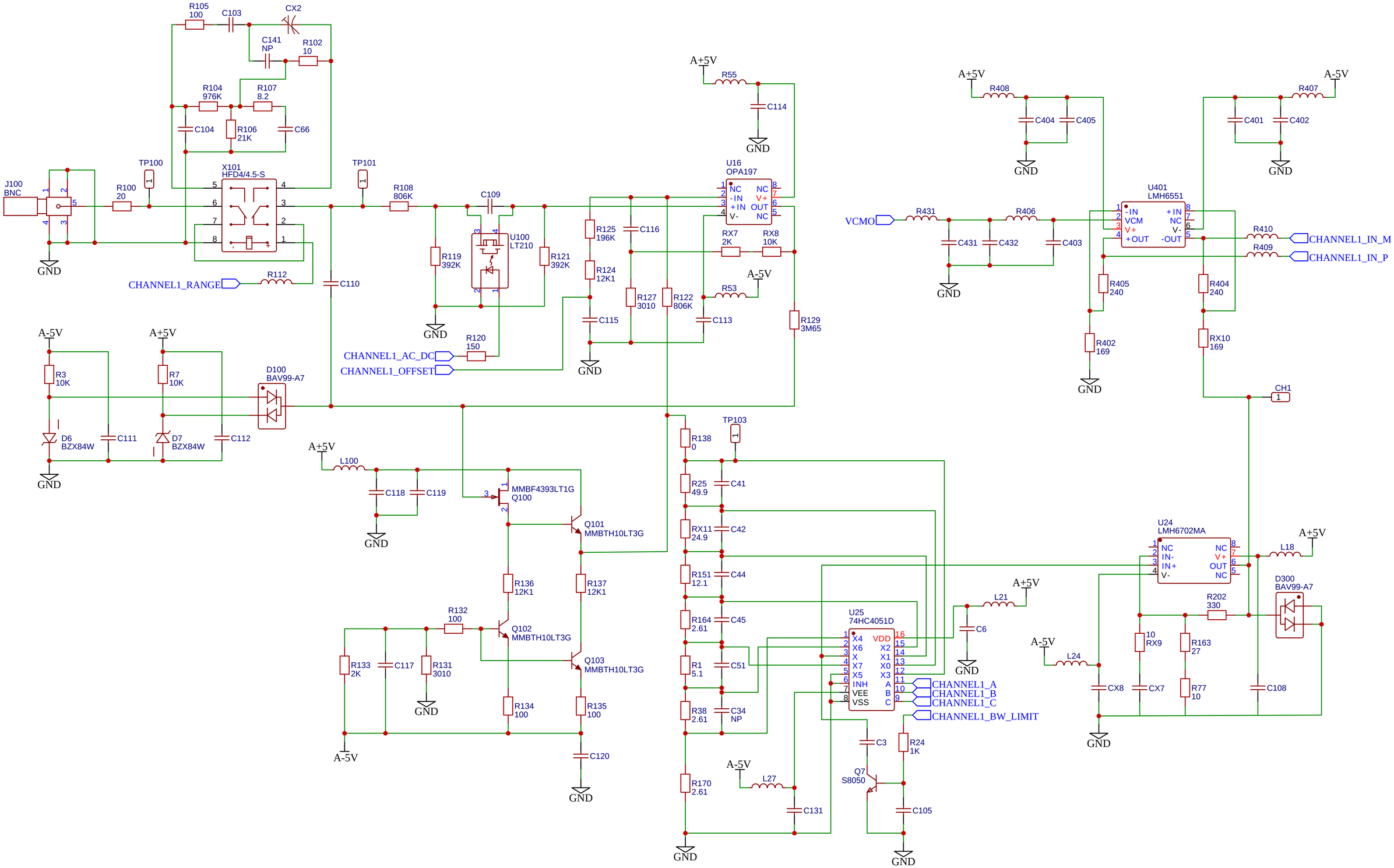

TITLE: Main Board (Channel 1)	REV: 1.0
Company:	Sheet: 4/8
Date: 2022-06-30 Drawn By:	

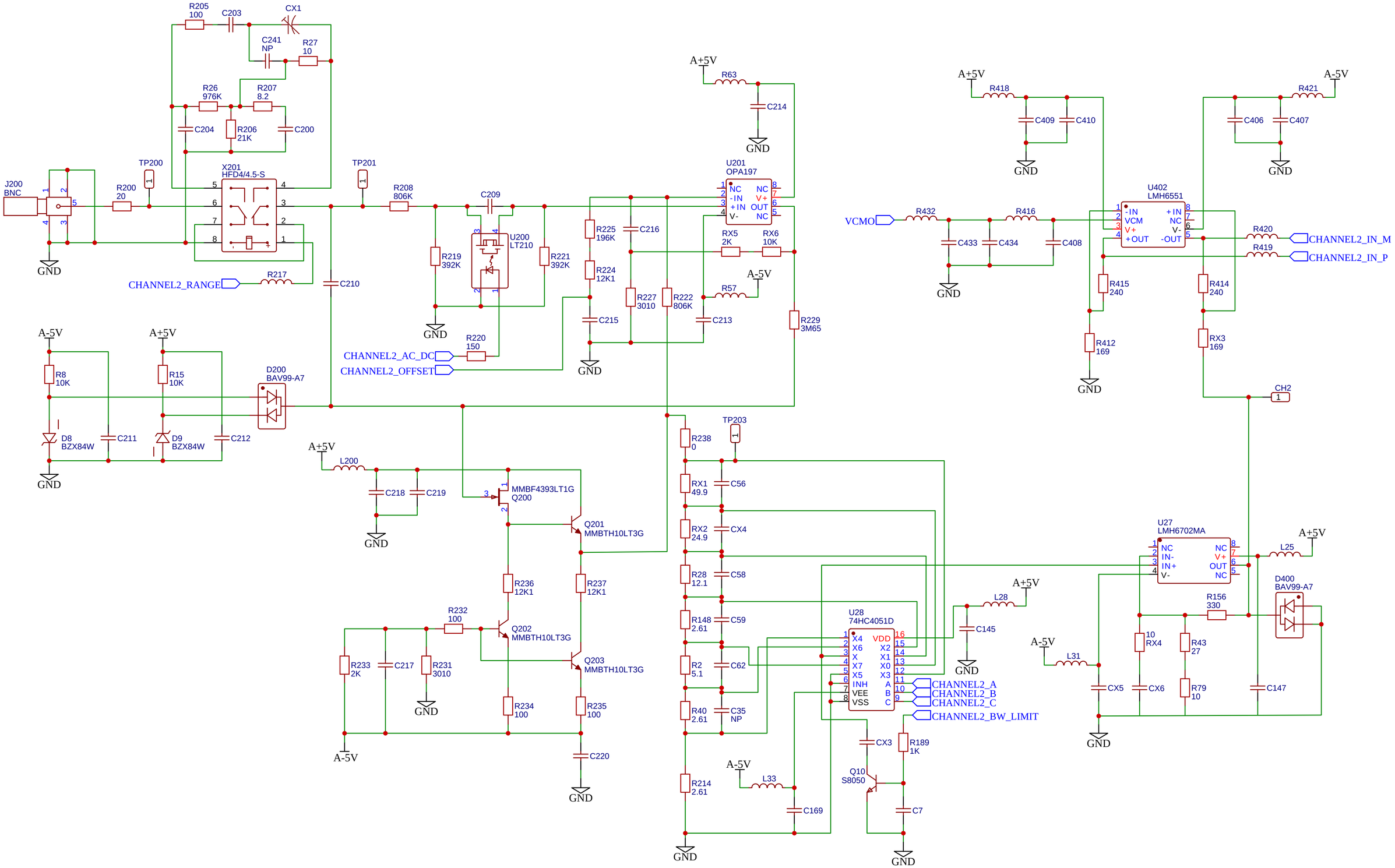

TITLE: Main Board (Channel 2)	REV: 1.0
Company:	Sheet: 5/8
Date: 2022-07-04 Drawn By:	