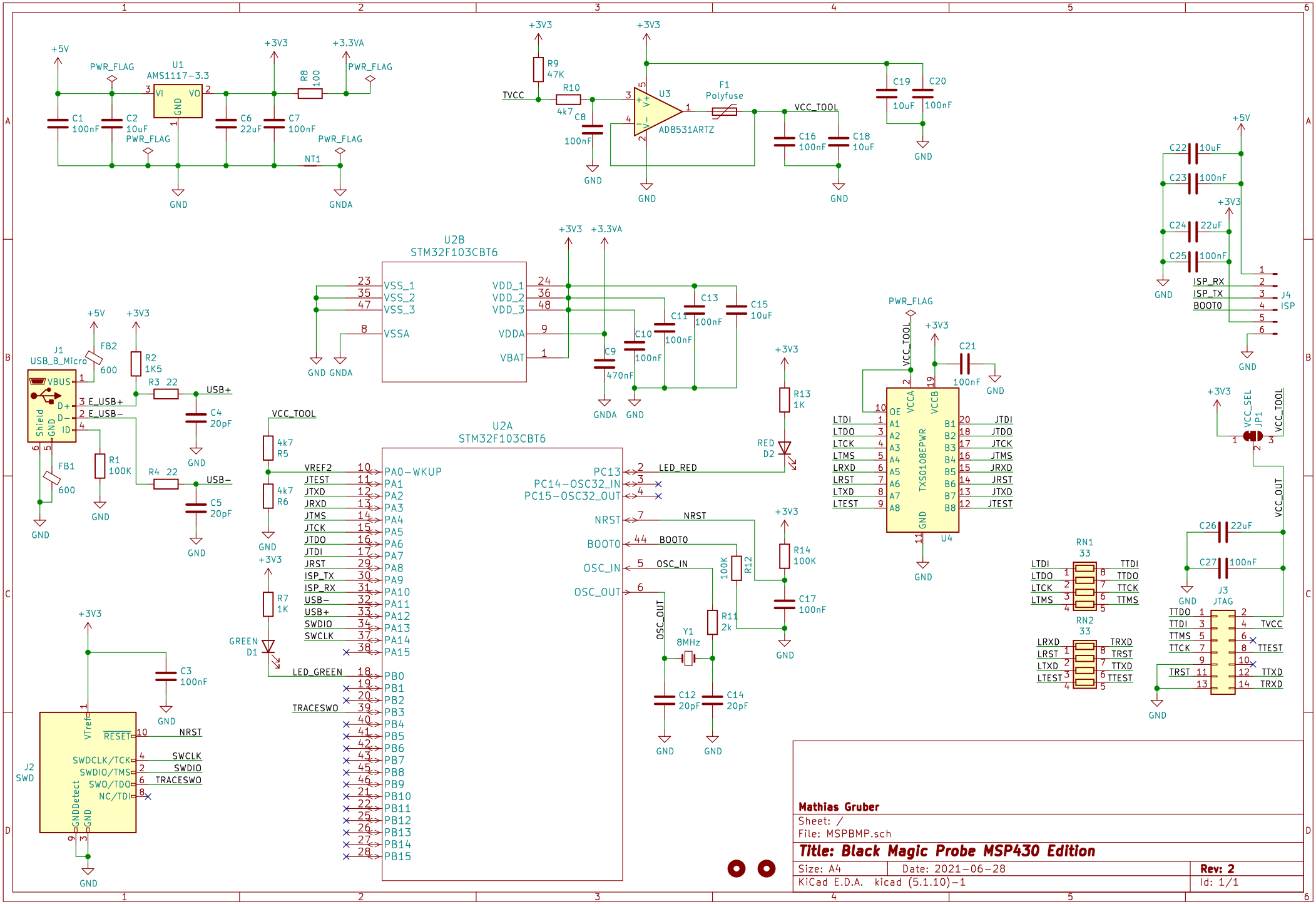
U1
AMS1117-3.3
VI
VO
GND
+5V
+3V3
+3.3VA
PWR_FLAG
C1 100nF
C2 10uF
C6 22uF
C7 100nF
R8 100
NT1
GNDA
GND
R9 47K
R10 4k7
C8 100nF
TVCC
U3
AD8531ARTZ
F1 Polyfuse
VCC_TOOL
C16 100nF
C18 10uF
C19 10uF
C20 100nF
C22 10uF
C23 100nF
C24 22uF
C25 100nF
J4 ISP
ISP_RX
ISP_TX
BOOT0
U2B
STM32F103CBT6
VSS_1
VSS_2
VSS_3
VSSA
VDD_1
VDD_2
VDD_3
VDDA
VBAT
C9 470nF
C10 100nF
C11 100nF
C13 100nF
C15 10uF
J1
USB_B_Micro
VBUS
D+
D-
ID
Shield
FB2 600
FB1 600
R2 1K5
R3 22
R4 22
R1 100K
C4 20pF
C5 20pF
USB+
USB-
E_USB+
E_USB-
U2A
STM32F103CBT6
VREF2
JTEST
JTXD
JRXD
JTMS
JTCK
JTDO
JTDI
JRST
ISP_TX
ISP_RX
USB-
USB+
SWDIO
SWCLK
LED_GREEN
TRACESWO
PA0-WKUP
PC13
PC14-OSC32_IN
PC15-OSC32_OUT
NRST
BOOT0
OSC_IN
OSC_OUT
LED_RED
R5 4k7
R6 4k7
R7 1K
GREEN D1
R13 1K
RED D2
R14 100K
R12 100K
R11 2k
C17 100nF
Y1 8MHz
C12 20pF
C14 20pF
U4
TXS0108EPWR
OE
VCCA
VCCB
LTDI
LTDO
LTCK
LTMS
LRXD
LRST
LTXD
LTEST
JTDI
JTDO
JTCK
JTMS
JRXD
JRST
JTXD
JTEST
C21 100nF
RN1 33
TTDI
TTDO
TTCK
TTMS
RN2 33
TRXD
TRST
TTXD
TTEST
VCC_SEL
JP1
VCC_OUT
C26 22uF
C27 100nF
J3 JTAG
TVCC
TTEST
TTXD
TRXD
J2 SWD
VTref
RESET
SWDCLK/TCK
SWDIO/TMS
SWO/TDO
NC/TDI
GNDDetect
C3 100nF
Mathias Gruber
Sheet: /
File: MSPBMP.sch
Title: Black Magic Probe MSP430 Edition
Size: A4
Date: 2021-06-28
Rev: 2
KiCad E.D.A. kicad (5.1.10)-1
Id: 1/1