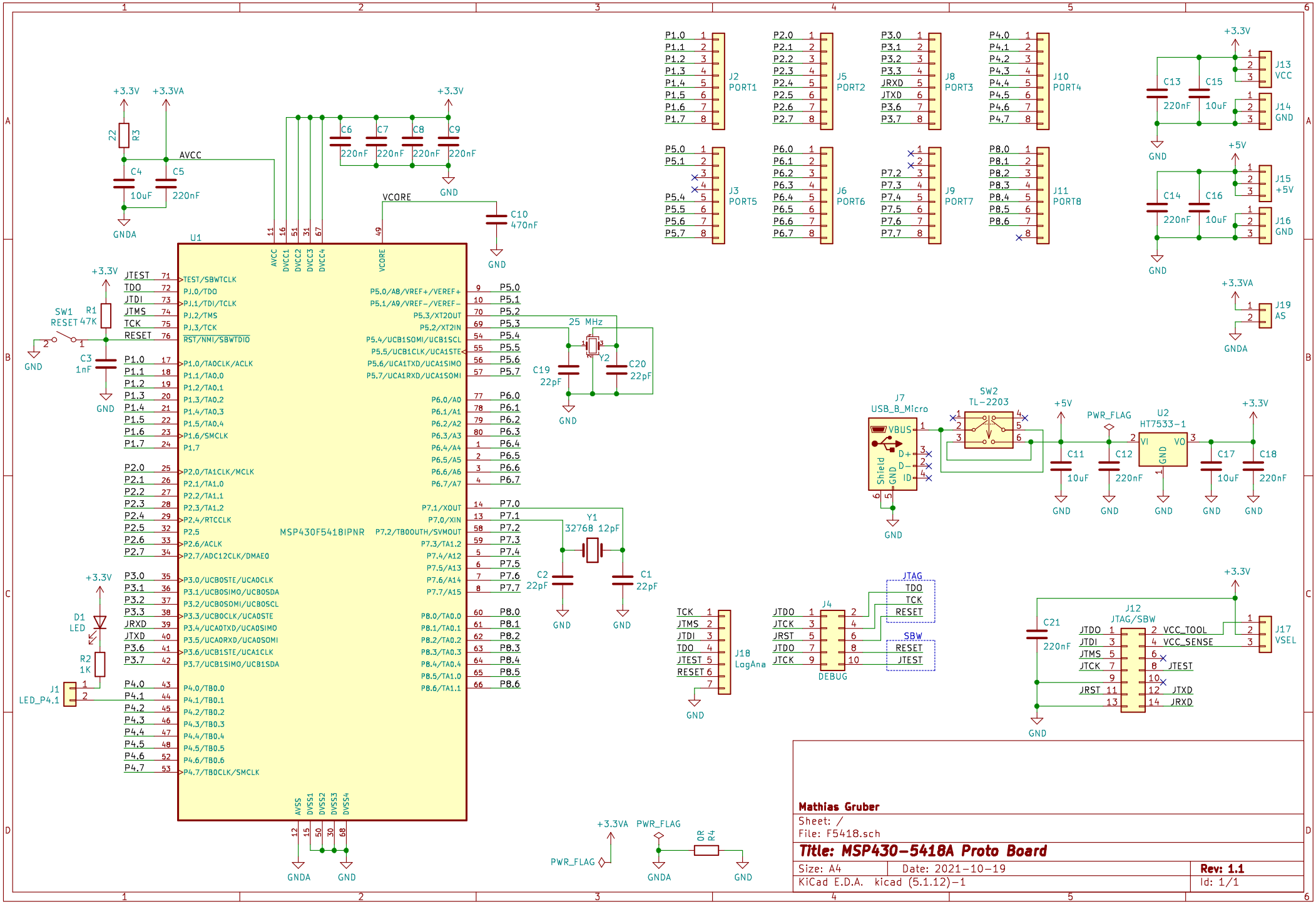
U1
MSP430F5418IPNR
AVCC
DVCC1
DVCC2
DVCC3
DVCC4
VCORE
AVSS
DVSS1
DVSS2
DVSS3
DVSS4
TEST/SBWTCLK
PJ.0/TDO
PJ.1/TDI/TCLK
PJ.2/TMS
PJ.3/TCK
RST/NMI/SBWTDIO
P1.0/TA0CLK/ACLK
P1.1/TA0.0
P1.2/TA0.1
P1.3/TA0.2
P1.4/TA0.3
P1.5/TA0.4
P1.6/SMCLK
P1.7
P2.0/TA1CLK/MCLK
P2.1/TA1.0
P2.2/TA1.1
P2.3/TA1.2
P2.4/RTCCLK
P2.5
P2.6/ACLK
P2.7/ADC12CLK/DMAEO
P3.0/UCB0STE/UCA0CLK
P3.1/UCB0SIMO/UCB0SDA
P3.2/UCB0SOMI/UCB0SCL
P3.3/UCB0CLK/UCA0STE
P3.4/UCA0TXD/UCA0SIMO
P3.5/UCA0RXD/UCA0SOMI
P3.6/UCB1STE/UCA1CLK
P3.7/UCB1SIMO/UCB1SDA
P4.0/TB0.0
P4.1/TB0.1
P4.2/TB0.2
P4.3/TB0.3
P4.4/TB0.4
P4.5/TB0.5
P4.6/TB0.6
P4.7/TB0CLK/SMCLK
P5.0/A8/VREF+/VEREF+
P5.1/A9/VREF−/VEREF−
P5.3/XT2OUT
P5.2/XT2IN
P5.4/UCB1SOMI/UCB1SCL
P5.5/UCB1CLK/UCA1STE
P5.6/UCA1TXD/UCA1SIMO
P5.7/UCA1RXD/UCA1SOMI
P6.0/A0
P6.1/A1
P6.2/A2
P6.3/A3
P6.4/A4
P6.5/A5
P6.6/A6
P6.7/A7
P7.1/XOUT
P7.0/XIN
P7.2/TB0OUTH/SVMOUT
P7.3/TA1.2
P7.4/A12
P7.5/A13
P7.6/A14
P7.7/A15
P8.0/TA0.0
P8.1/TA0.1
P8.2/TA0.2
P8.3/TA0.3
P8.4/TA0.4
P8.5/TA1.0
P8.6/TA1.1
+3.3V
+3.3VA
AVCC
VCORE
GND
GNDA
R3 22
C4 10uF
C5 220nF
C6 220nF
C7 220nF
C8 220nF
C9 220nF
C10 470nF
SW1 RESET
R1 47K
C3 1nF
25 MHz
Y2
C19 22pF
C20 22pF
Y1 32768 12pF
C1 22pF
C2 22pF
D1 LED
R2 1K
J1 LED_P4.1
J2 PORT1
J3 PORT5
J5 PORT2
J6 PORT6
J8 PORT3
J9 PORT7
J10 PORT4
J11 PORT8
J13 VCC
J14 GND
J15 +5V
J16 GND
J19 AS
C13 220nF
C15 10uF
C14 220nF
C16 10uF
J7 USB_B_Micro
SW2 TL-2203
+5V
PWR_FLAG
U2 HT7533-1
C11 10uF
C12 220nF
C17 10uF
C18 220nF
J18 LogAna
J4 DEBUG
JTAG
SBW
J12 JTAG/SBW
C21 220nF
J17 VSEL
VCC_TOOL
VCC_SENSE
R4 0R
Mathias Gruber
Sheet: /
File: F5418.sch
Title: MSP430-5418A Proto Board
Size: A4
Date: 2021-10-19
Rev: 1.1
KiCad E.D.A. kicad (5.1.12)-1
Id: 1/1