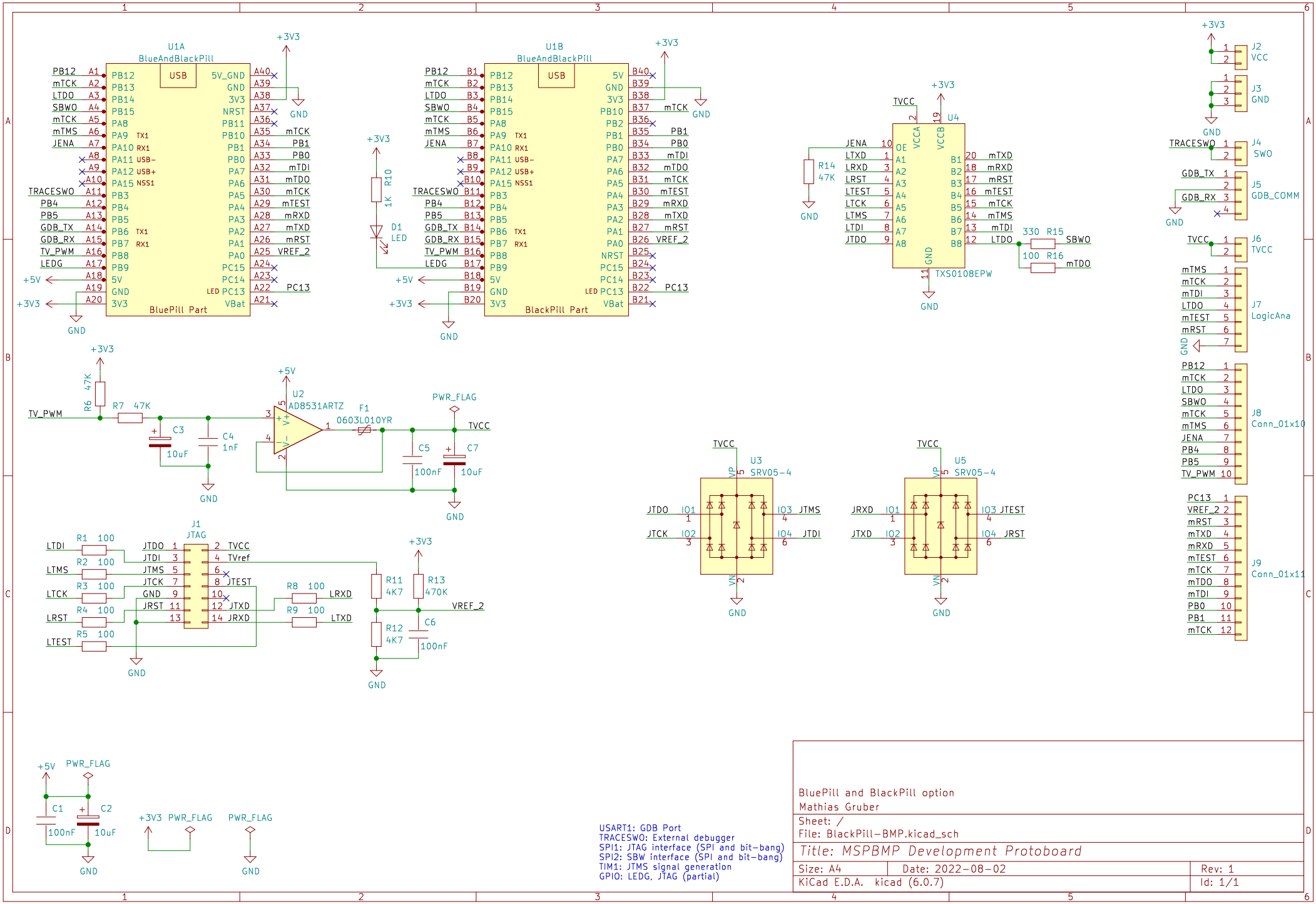
U1A
BlueAndBlackPill
BluePill Part
U1B
BlueAndBlackPill
BlackPill Part
U2
AD8531ARTZ
U3
SRV05-4
U4
TXS0108EPW
U5
SRV05-4
J1
JTAG
J2
VCC
J3
GND
J4
SWO
J5
GDB_COMM
J6
TVCC
J7
LogicAna
J8
Conn_01x10
J9
Conn_01x11
F1
0603L010YR
D1
LED
PWR_FLAG
+3V3
+5V
GND
TVCC
TV_PWM
USART1: GDB Port
TRACESWO: External debugger
SPI1: JTAG interface (SPI and bit-bang)
SPI2: SBW interface (SPI and bit-bang)
TIM1: JTMS signal generation
GPIO: LEDG, JTAG (partial)
BluePill and BlackPill option
Mathias Gruber
Sheet: /
File: BlackPill-BMP.kicad_sch
Title: MSPBMP Development Protoboard
Size: A4
Date: 2022-08-02
Rev: 1
KiCad E.D.A. kicad (6.0.7)
Id: 1/1