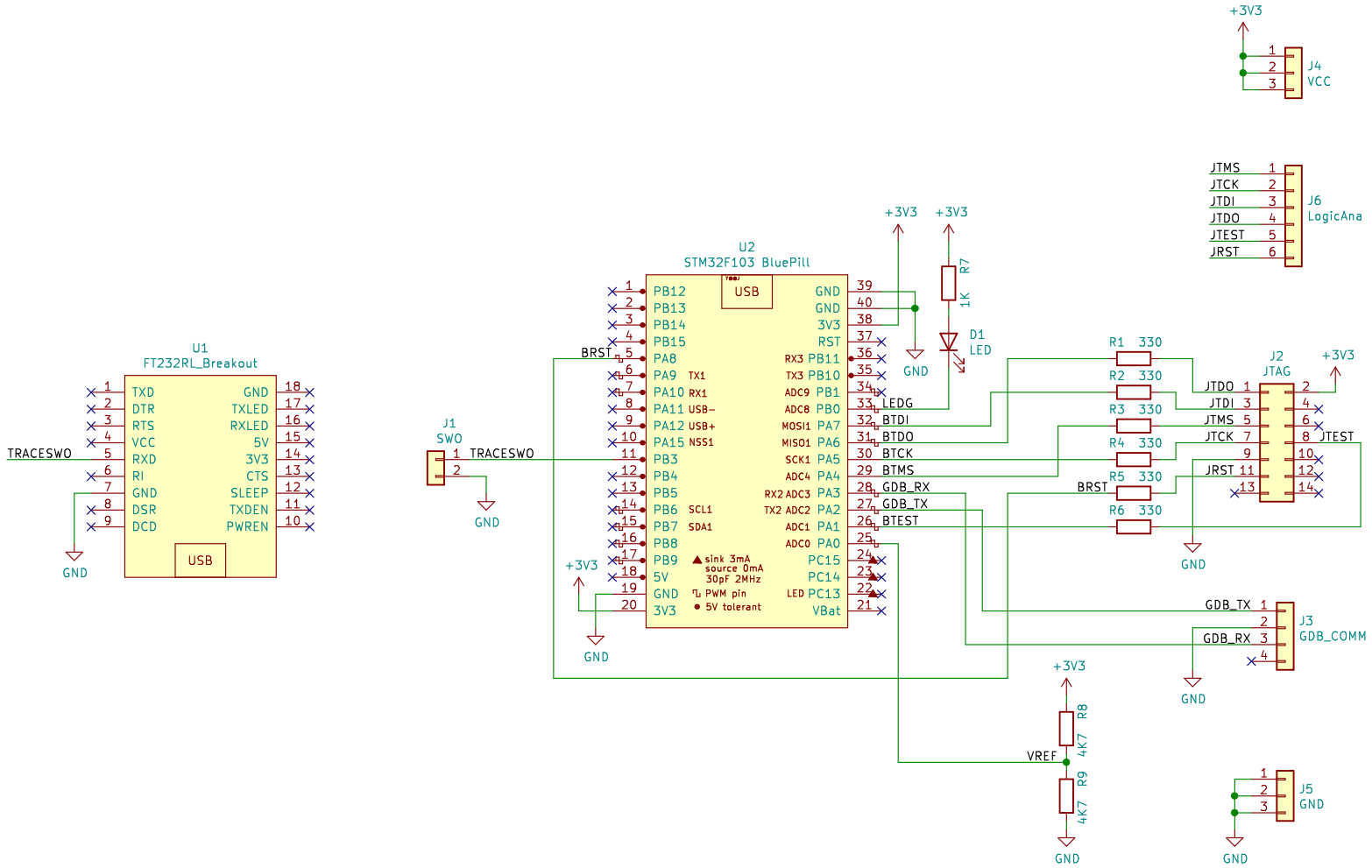

With optional TRACE SWO using FT232RL

Mathias Gruber

Sheet: /

File: BluePill−BMP.sch

Title: MSPBMP Development Protoboard

Size: A4	Date: 2021−11−07	**Rev: 1**
KiCad E.D.A. kicad (5.1.10)−1		Id: 1/1