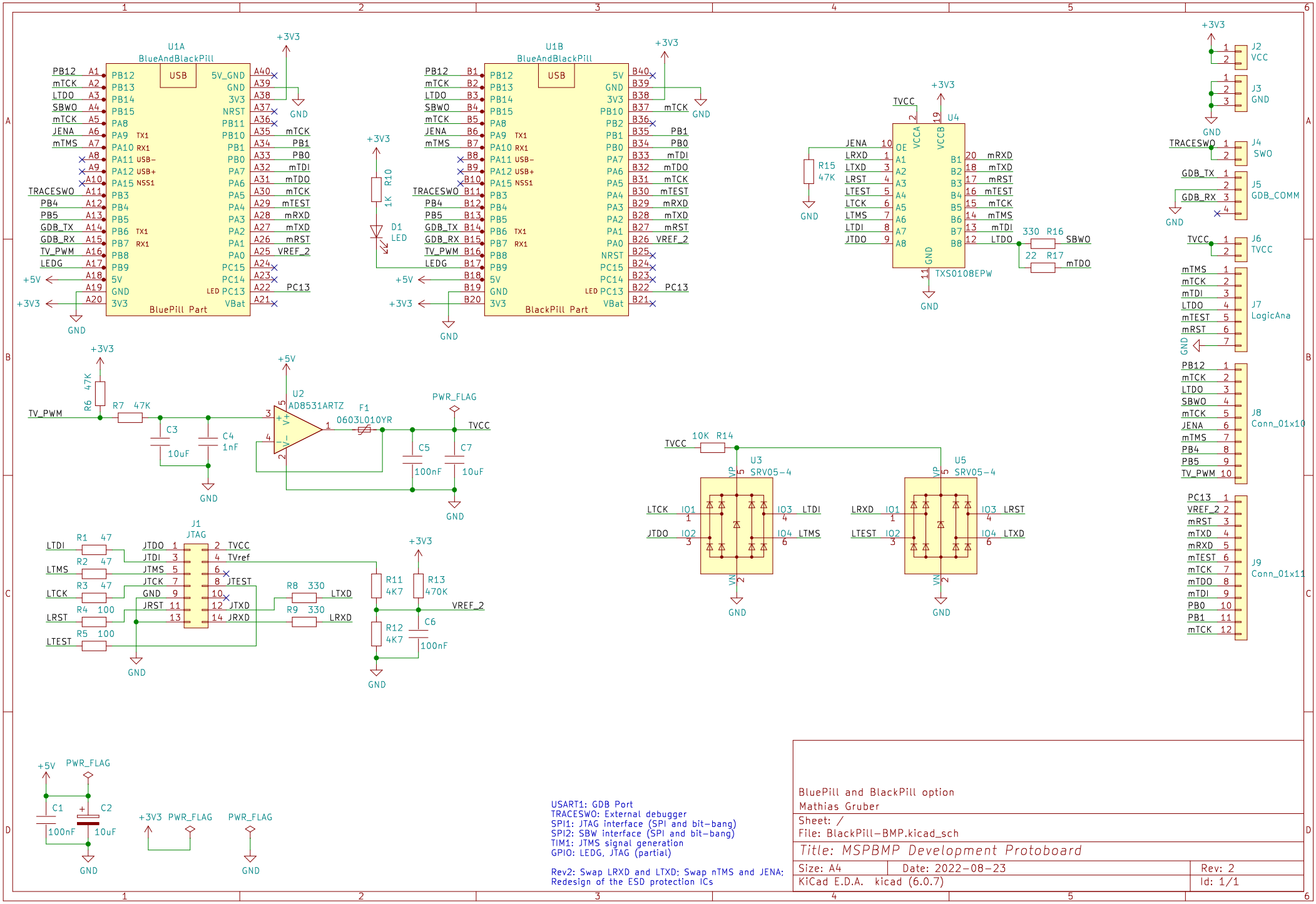
U1A
BlueAndBlackPill
BluePill Part
U1B
BlueAndBlackPill
BlackPill Part
U2
AD8531ARTZ
U3
SRV05-4
U4
TXS0108EPW
U5
SRV05-4
J1
JTAG
J2
VCC
J3
GND
J4
SWO
J5
GDB_COMM
J6
TVCC
J7
LogicAna
J8
Conn_01x10
J9
Conn_01x11
PWR_FLAG
+3V3
+5V
GND
TVCC
TV_PWM
F1
0603L010YR
R6 47K
R7 47K
C3 10uF
C4 1nF
C5 100nF
C7 10uF
R10 1K
D1 LED
R15 47K
R16 330
R17 22
R14 10K
R1 47
R2 47
R3 47
R4 100
R5 100
R8 330
R9 330
R11 4K7
R12 4K7
R13 470K
C6 100nF
C1 100nF
C2 10uF
USART1: GDB Port
TRACESWO: External debugger
SPI1: JTAG interface (SPI and bit-bang)
SPI2: SBW interface (SPI and bit-bang)
TIM1: JTMS signal generation
GPIO: LEDG, JTAG (partial)
Rev2: Swap LRXD and LTXD; Swap nTMS and JENA;
Redesign of the ESD protection ICs
BluePill and BlackPill option
Mathias Gruber
Sheet: /
File: BlackPill-BMP.kicad_sch
Title: MSPBMP Development Protoboard
Size: A4
Date: 2022-08-23
Rev: 2
KiCad E.D.A. kicad (6.0.7)
Id: 1/1