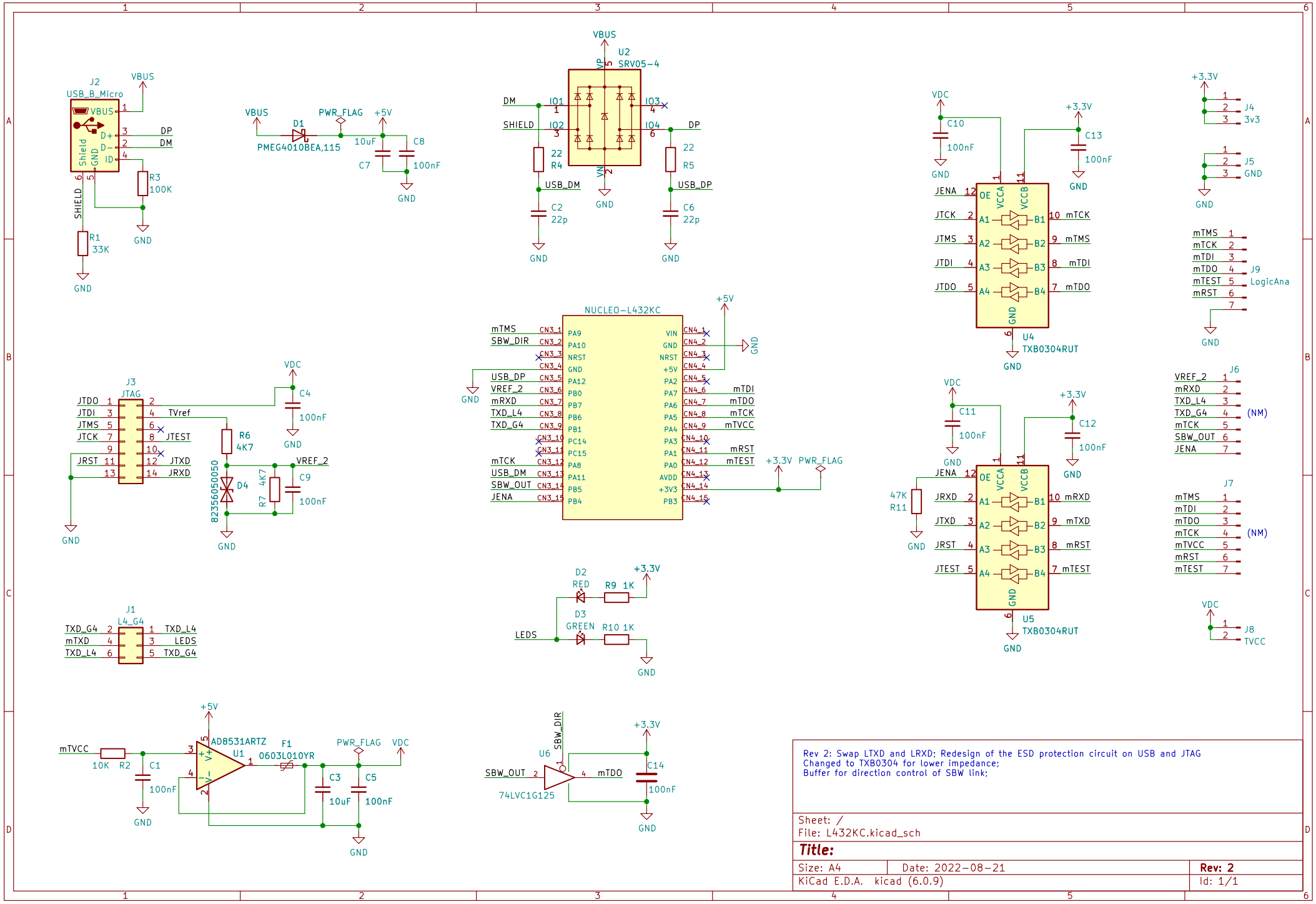
J2
USB_B_Micro
VBUS
DP
DM
SHIELD
R3
100K
R1
33K
GND
D1
PMEG4010BEA,115
PWR_FLAG
+5V
10uF
C7
C8
100nF
U2
SRV05-4
IO1
IO2
IO3
IO4
VP
VN
22
R4
R5
USB_DM
USB_DP
C2
22p
C6
22p
VDC
C10
C13
U4
TXB0304RUT
JENA
JTCK
JTMS
JTDI
JTDO
OE
VCCA
VCCB
A1
A2
A3
A4
B1
B2
B3
B4
mTCK
mTMS
mTDI
mTDO
+3.3V
J4
3v3
J5
J9
LogicAna
mRST
NUCLEO-L432KC
mTMS
SBW_DIR
USB_DP
VREF_2
mRXD
TXD_L4
TXD_G4
mTCK
USB_DM
SBW_OUT
JENA
PA9
PA10
NRST
PA12
PB0
PB7
PB6
PB1
PC14
PC15
PA8
PA11
PB5
PB4
VIN
PA2
PA7
PA6
PA5
PA4
PA3
PA1
PA0
AVDD
+3V3
PB3
mTDI
mTDO
mTVCC
mRST
mTEST
PWR_FLAG
J3
JTAG
JTDO
JTDI
JTMS
JTCK
JRST
TVref
JTEST
JTXD
JRXD
R6
4K7
D4
82356050050
R7
4K7
C4
C9
J6
VREF_2
mRXD
TXD_L4
TXD_G4
mTCK
SBW_OUT
JENA
(NM)
C11
C12
47K
R11
U5
TXB0304RUT
J7
mTMS
mTDI
mTDO
mTCK
mTVCC
mRST
mTEST
(NM)
J8
TVCC
J1
L4_G4
TXD_G4
mTXD
TXD_L4
LEDS
D2
RED
R9 1K
D3
GREEN
R10 1K
mTVCC
10K
R2
C1
AD8531ARTZ
U1
F1
0603L010YR
C3
10uF
C5
100nF
U6
SBW_DIR
SBW_OUT
74LVC1G125
C14
Rev 2: Swap LTXD and LRXD; Redesign of the ESD protection circuit on USB and JTAG
Changed to TXB0304 for lower impedance;
Buffer for direction control of SBW link;
Sheet: /
File: L432KC.kicad_sch
Title:
Size: A4
Date: 2022-08-21
Rev: 2
KiCad E.D.A. kicad (6.0.9)
Id: 1/1